GEOCON
CONSULTANTS, INC.
GEOTECHNICAL ■ ENVIRONMENTAL ■ MATERIALS

Project No. S9850-03-21
September 1, 2016

Edward Benelli
Hazardous Substances Engineer
Hazardous Waste Management Program
Department of Toxic Substances Control
P.O. Box 806
Sacramento, California 95812-0806

Subject: DRAFT SAMPLING AND ANALYSIS PLAN
AIR MONITORING AT VARIOUS METAL SHREDDING FACILITIES STATEWIDE:
SIMS METAL MANAGEMENT
699 SEAPORT BLVD, REDWOOD CITY CA, 94063-2712
SA RECYCLING - BAKERSFIELD
2000 E. BRUNDAGE LANE, BAKERSFIELD, CA 93307-2734
SA RECYCLING – TERMINAL ISLAND
901 NEW DOCK STREET, TERMINAL ISLAND, CA 90731

DRAFT

Dear Mr. Benelli:

In accordance with the above-referenced contract, we have prepared this Draft Sampling and Analysis Plan (SAP) for air monitoring at the above-referenced metal shredding facilities. The California Department of Toxic Substance Control (DTSC) requested the preparation of this SAP as part of their investigation into the off-site migration of airborne particulates, toxic organic compounds, and asbestos from metal shredding facilities. The SAP summarizes the methodologies and rationale for proposed investigative activities and provides guidance for field activities, sample collection, laboratory analysis, data quality assurance and control, data management/review/analysis, and reporting to ensure that the results of the assessment satisfy predefined project objectives and performance criteria. The DTSC intends to use the results of the air monitoring to assess the potential impacts from air emissions from metal shredding and metal shredding waste management operations.

We appreciate the opportunity to work with the DTSC on this project. Please let us know if you have questions concerning the SAP or we may be of further service.

Sincerely,

GEOCON CONSULTANTS, INC.

Josh Ewert, PG
Project Geologist

PROFESSIONAL GEOLOGIST
JOSH EWERT
NO. 9096
STATE OF CALIFORNIA

Jim Brake, PG
Senior Geologist/Vice President

REGISTERED GEOLOGIST
JAMES F. BRAKE
NO. 5768
STATE OF CALIFORNIA

IDENTIFICATION FORM

Document Title: Draft Sampling and Analysis Plan
Air Monitoring at Various Metal Shredding Facilities Statewide

Site Locations: Sims Metal Management
699 Seaport Blvd, Redwood City CA, 94063-2712
SA Recycling - Bakersfield
2000 E. Brundage Lane, Bakersfield, CA 93307-2734
SA Recycling – Terminal Island
901 New Dock Street, Terminal Island, CA 90731

Contract No.: 15-T4124

Prepared by: Geocon Consultants, Inc.
3160 Gold Valley Drive, Suite 800
Rancho Cordova, California 95742
916.852.9118

Geocon Project Number: S9850-03-21

Geocon Contract Manager: Jim Brake, PG
brake@geoconinc.com
916.852.9118

Geocon Contract Manager:

Approval: _____ Date: September 1, 2016
Jim Brake, PG No. 5753

Geocon Project Manager:

Approval: _____ Date: September 1, 2016
Josh Ewert, PG No. 9096

This document has been prepared for the California Environmental Protection Agency (CalEPA), DTSC. The material herein is not to be disclosed to, discussed with, or made available to any person(s) for any reason without prior express approval of the appropriate responsible DTSC officer.

DRAFT

APPROVAL FORM

Document Title: Draft Sampling and Analysis Plan
Various Metal Shredding Facilities Statewide

Site Locations: Sims Metal Management
699 Seaport Blvd, Redwood City CA, 94063-2712
SA Recycling - Bakersfield
2000 E. Brundage Lane, Bakersfield, CA 93307-2734
SA Recycling – Terminal Island
901 New Dock Street, Terminal Island, CA 90731

Contract No.: 15-T4124

Prepared by: Geocon Consultants, Inc.
3160 Gold Valley Drive, Suite 800
Rancho Cordova, California 95742
916.852.9118

Geocon Project Number: S9850-03-21

DTSC Contract Manager: Edward Benelli,
Edward.Benelli @dtsc.ca.gov
916.325.6564

DTSC Contract Manager:

Approval: _____ Date: _____
Edward Benelli

DTSC Project Manager:

Approval: _____ Date: _____
John Muegge

DRAFT

DISTRIBUTION LIST

Edward Benelli, Contract Manager (1 hard-copy, e-copy)
California Environmental Protection Agency
Department of Toxic Substances Control
Hazardous Waste Management Program

John Muegge, Project Manager (1 hard-copy, e-copy)
California Environmental Protection Agency
Department of Toxic Substances Control
Hazardous Waste Management Program

Josh Ewert, PG and Jim Brake, PG (project file)
Geocon Consultants, Inc.

DRAFT

TABLE OF CONTENTS

DRAFT SAMPLING AND ANALYSIS PLAN
AIR MONITORING AT VARIOUS METAL SHREDDING FACILITIES STATEWIDE

PAGE

IDENTIFICATION FORM i
APPROVAL FORM ii
DISTRIBUTION LIST iii
TABLE OF CONTENTS iv
ACRONYMS AND ABBREVIATIONS vi

1.0 INTRODUCTION 1
1.1 Background 1
1.2 Responsible Agency 2
1.3 Project Contact Information 2

2.0 SITE DESCRIPTIONS 3
2.1 Description of Facilities 3
2.1.1 SMM 3
2.1.2 SARB 3
2.1.3 SARTI 4

3.0 PROJECT AND DATA QUALITY OBJECTIVES 6
3.1 Project Task and Problem Definition 6
3.2 Data Quality Objectives 6
3.3 Data Quality Indicators 8
3.3.1 Precision 8
3.3.2 Accuracy 9
3.3.3 Representativeness 9
3.3.4 Completeness 9
3.3.5 Comparability 10
3.4 Data Review and Validation 10
3.5 Data Management 11
3.6 Assessment Oversight 11

4.0 SAMPLING DESIGN AND RATIONALE 13

5.0 LABORATORY ANALYSIS 14
5.1 Analyses Narrative 14
5.2 Analytical Laboratories 15

6.0 FIELD METHODS AND PROCEDURES 16
6.1 TSP 16
6.1.1 TSP Sampling Equipment 16
6.1.2 TSP Sampling Method 16
6.2 PM_{10} 19
6.2.1 PM_{10} Sampling Equipment 19
6.2.2 PM_{10} Sampling Method 20
6.3 $PM_{2.5}$ 26
6.3.1 $PM_{2.5}$ Sampling Equipment 26
6.3.2 $PM_{2.5}$ Sampling Method 26
6.4 Asbestos 27

DRAFT

6.4.1 Asbestos Sampling Equipment 27
6.4.2 Asbestos Sampling Methods 27
6.5 PCBs 29
6.5.1 PCB Sampling Equipment 29
6.5.2 PCB Sampling Methods 29
6.6 Formaldehyde 30
6.6.1 Formaldehyde Sampling Equipment 30
6.6.2 Formaldehyde Sampling Methods 30
6.7 VOC 32
6.7.1 VOC Sampling Equipment 32
6.7.2 VOC Sampling Methods 32
6.8 Meteorological Data 33
6.8.1 Meteorological Monitoring Equipment 33
6.8.2 Meteorological Monitoring Procedures 33

7.0 SAMPLE CONTAINERS, PRESERVATION AND STORAGE 34

8.0 DISPOSAL OF RESIDUAL MATERIALS 35

9.0 SAMPLE DOCUMENTATION 36
9.1 Field Notes 36
9.2 Labeling 36
9.3 Sample COC Forms 36

10.0 QUALITY CONTROL 38
10.1 Field QC Samples 38
10.2 Laboratory QC Samples 38

11.0 FIELD VARIANCES 39

12.0 HEALTH AND SAFETY PROCEDURES 40

13.0 REPORT PREPARATION 41

14.0 ANTICIPATED SCHEDULE 42

15.0 REFERENCES 43

FIGURES

1. Site Location Map
2. Vicinity Map – Sims Metal Management
3. Site Plan – Sim Metal Management
4. Vicinity Map – SA Recycling Bakersfield
5. Site Plan – SA Recycling Bakersfield
6. Vicinity Map – SA Recycling Terminal Island
7. Site Plan – SA Recycling Terminal Island

TABLES

1. Summary of Data Quality Objectives
2. Summary of Data Quality Indicators
3. Sampling Frequency and Analysis
4. Sample Container, Preservation, and Holding Time Requirements
5. Summary of Laboratory Reporting Limits

DRAFT

APPENDICES

A. CLN Quality Assurance Management Plan and Standard Operating Procedures

B. EMSL Quality Assurance Management Plan

C. Copy of Tisch Environmental's *Operations Manual TE-5170V Volumetric Flow Controlled Total Suspended Particulate High Volume Air Sampler*

D. Copy of Tisch Environmental's *TE-Wilbur Operations Manual Rev 002.2, 01/07/2016*

E. Health and Safety Plan

DRAFT

ABBREVIATIONS AND ACRONYMS	
aka	also known as
AQMD	Air Quality Management Districts
ARB	Air Resources Board
CLN	CHESTER LabNet
COC	Chain-of-custody
COPC	Chemical of potential concern
DQI	data quality indicators
DQO	Data Quality Objectives
DTSC	Department of Toxics Substance Control
EMSL	EMSL Analytical, Inc.
HSP	Health and Safety Plan
L/min	Liters per minute
LCS/LCSD	laboratory control sample/laboratory control sample duplicates
MCE	mixed cellulose ester
MDL	Method Detection Limit
MS/MSD	matrix spike/matrix spike duplicates
NIOSH	National Institute for Occupational Safety and Health
OSHA	Occupational Safety and Health Administration
PARCCS	precision, accuracy, representativeness, completeness, comparability, and sensitivity
PCB	poly chlorinated biphenyls
pdf	portable document format
PM10	particulate matter less than 10 µm
PM2.5	particulate matter less than 2.5 µm
PPE	Personal Protective Equipment
PTFE	polytetrafluoroethylene
QC	Quality Control
RCRA	Resource Conservation and Recovery Act
RPD	relative percent difference
SARB	SA Recycling Bakersfield
SARTI	SA Recycling Terminal Island
SB	Senate Bill
SD	Standard Deviation
SMM	Sims Metal Management
SAP	Sampling and Analysis Plan
Tisch	Tisch Environmental
TOS	Toxic organic species
TSP	total suspended particulates
USEPA	United States Environmental Protection Agency
°C	Degrees Celsius

DRAFT

DRAFT SAMPLING AND ANALYSIS PLAN
AIR MONITORING AT VARIOUS METAL SHREDDING FACILITIES STATEWIDE
CONTRACT NO. 15-T4124

1.0 INTRODUCTION

Geocon Consultants, Inc. prepared this Draft Sampling and Analysis Plan (SAP) in compliance with California Department of Toxic Substance Control (DTSC) Contract Number 15-T4124, Start Work Order #1. This SAP summarizes air monitoring to be performed at the following facilities that generate metal shredding waste (collectively referred to as the Sites):

- Sims Metal Management (SMM) at 699 Seaport Blvd, Redwood City CA, 94063-2712,
- SA Recycling – Bakersfield (SARB) at 2000 E. Brundage Lane, Bakersfield, CA 93307-2734, and
- SA Recycling – Terminal Island (SARTI) at 901 New Dock Street, Terminal Island, CA 90731.

1.1 Background

Metal shredding facilities process end-of-life vehicles, appliances, and other forms of scrap metal to recover iron, steel, aluminum, and copper for re-use in new metal products. The metal shredding process generates large amounts of metal shredder waste, which consists of plastics, rubber, glass, foam, fabrics, automobile fluids, dirt, and residual metals. The metal shredding process can also potentially create significant amounts of environmental contamination in the forms of storm water runoff, contaminated soil, contaminated groundwater, and fugitive air emissions. The focus of the scope of services described in this SAP is on fugitive air emissions from facilities generating and/or receiving metal shredding waste.

Although metal shredding waste typically does not exceed the federal regulatory levels established by the Resource Conservation and Recovery Act (RCRA), metal shredder waste has been regulated as a California-only, non-RCRA hazardous waste since 1984 because residual levels of copper, lead, and zinc often exceed California's more stringent regulatory thresholds. Six large metal shredding facilities are currently authorized by DTSC to conduct metal shredding operations. Five of the facilities treat the metal shredding waste with a cement product which is intended to reduce the solubility of the metals and render the waste less hazardous. The sixth facility transfers their waste out of state for further processing. The treated waste is then disposed of in Class II or Class III landfills, where it is largely used as alternative daily cover.

Senate Bill (SB) 1249 (Hill, Chapter 756, Statutes of 2014) became law on January 1, 2015 and requires the DTSC to evaluate the risks and threats posed by the production and management of metal shredding waste. SB 1249 authorizes the DTSC to develop alternative management standards for metal shredding facilities. The DTSC has developed a 3-year plan to conduct the evaluation required by SB 1249, which includes an assessment of the potential impacts of off-site migration of air emissions.

DRAFT

1.2 Responsible Agency

DTSC is the lead regulatory agency overseeing this air monitoring program. DTSC regulates hazardous waste, and cleans-up existing contamination in California, primarily under the authority of the federal RCRA of 1976 and the California Health and Safety Code.

Geocon prepared and will implement the SAP for the DTSC. Geocon is a consulting firm that specializes in environmental and geotechnical engineering and materials testing services. Summary information about Geocon is available at http://www.geoconinc.com.

1.3 Project Contact Information

The title/responsibility, name, phone numbers, and email address of personnel associated with the air quality monitoring events are summarized in the following table:

Agency/Company	Name	Title/Responsibility	Phone Number	Email Address
DTSC	Ed Benelli	Project Manager	916.324.6564	Edward.Benelli@dtsc.ca.gov
Geocon	Jim Brake	Program/Quality Assurance Manager	916.852.9118	brake@geoconinc.com
Geocon	Josh Ewert	Project/Technical Manager	916.852.9118	ewert@geoconinc.com
CHESTER LabNet	Sheri Meldstab	Inorganic Lab Manager and QA/QC Coordinator	503.624.2183	sheldstab@chesterlab.net
EMSL	Judy Le	Sales Assistant	323.606.8420	jle@EMSL.com

DRAFT

2.0 SITE DESCRIPTIONS

We plan to conduct air monitoring at the three Sites that represent examples of larger (SARTI, SMM) and smaller (SARB) operations. Each Site is in a different geographical region of the state and operates under different local Air Quality Management Districts (AQMD). Additional information about the Sites to be monitored is in the following sub-sections:

2.1 Description of Facilities

2.1.1 SMM

Site Name:	Sims Metal Management
Site Address:	699 Seaport Blvd, Redwood City, CA, 94063-2712
County:	San Mateo
Site Operator:	Sims Metal Management, Limited
Local AQMD:	Bay Area Air Quality Management District
Local AQMD Contact:	Eric Stevenson (415) 749-4695

SMM is located in the Port of Redwood City, on the eastern shore of Redwood Creek and approximately 1.1 miles southwest of San Francisco Bay. According to SMM's webpage, the recycling center "processes ferrous scrap metal and specializes in bus, railcars and aluminum trailer scrap recycling. The yard is equipped with a metal shredder and can process materials via ship, rail and truck" (SMM website, 2016).

Monthly average temperatures range from the high-30s degrees Fahrenheit (°F) in December to the low-80s °F in July. Annual average precipitation for Redwood City is 19.16 inches per year, with the lowest precipitation occurring between July and August (WRCC, 2016). The average wind speed in Redwood City ranges from 5 miles per hour (mph) in January to 12 mph in May. Higher wind speeds typically occur from April to August. The three most common wind directions throughout the year are from the north-northwest, west-northwest, and northwest. During the month of September (the anticipated sampling month), the average wind speed is 8 mph with a predominant wind direction of north-northwest (Windfinder.com, 2016).

2.1.2 SARB

Site Name:	SA Recycling – Bakersfield
Site Address:	2000 E. Brundage Lane, Bakersfield, CA 93307-2734

DRAFT

County:	Kern
Site Operator:	SA Recycling, LLC
Local AQMD:	San Joaquin Valley Air Pollution Control District
Local AQMD Contact:	David Garner (559) 230-5938

SARB is located approximately 3 miles southeast of downtown Bakersfield, on the north side of Brundage Lane. According to SARB's webpage, the recycling center services the entire San Joaquin Valley and accepts all scrap metal including steel, aluminum, copper, tin, appliance, junk cars, cans, and many other types of scrap metal (SARB website, 2016).

Monthly average temperatures range from the mid-30s °F in December to the low-100s °F in July. Annual average precipitation for the Bakersfield is 5.83 inches per year, with the lowest precipitation occurring from July through September (WRCC, 2016). The average wind speed in Redwood City ranges from 5 mph in January to 12 mph in May. Higher wind speeds typically occur from April to August. The three most common wind directions throughout the year are from the north-northwest, west-northwest, and northwest. During the month of September (the anticipated sampling month), the average wind speed is 8 mph with a predominant wind direction of north-northwest.

DRAFT

2.1.3 SARTI

Site Name:	SA Recycling – Terminal Island
Site Address:	901 New Dock Street, Terminal Island, CA 90731
County:	Los Angeles
Site Operator:	SA Recycling LLC
Local AQMD:	South Coast Air Quality Management District
Local AQMD Contact:	Mohan Balagopalan (909) 396-2704

SARTI is in the Port of Long Beach, on the southern shore of Cerritos Channel and East Basin Channel on Terminal Island. According to SARTI's webpage, this Site is not open to the public (SARTI website, 2016).

We used climate data for San Pedro, which is immediately west of Terminal Island. The monthly average temperatures range from the high-40s °F in January to the mid-70s °F in September. Annual average precipitation for the San Pedro is 10.69 inches per year, with the lowest precipitation occurring from June through August (WRCC, 2016). The average wind speed in San Pedro ranges from 7 mph in January to 29 mph in March. Higher wind speeds typically occur from February through April and again from

October through December. The most common wind directions throughout the year are from the west-southwest and southwest. During the month of September (the anticipated sampling month), the average wind speed is 9 mph with a predominant wind direction of west-southwest.

DRAFT

3.0 PROJECT AND DATA QUALITY OBJECTIVES

This section describes the data quality objectives (DQO) for the air monitoring program. Laboratory sample handling and analysis methods and procedures are provided in the Quality Assurance Management Plans (QAMP) provided by CHESTER LabNet (CLN) and EMSL Analytical, Inc. (EMSL) and will be followed for all analytical testing.

3.1 Project Task and Problem Definition

The project task is to assess the concentrations of the following constituents of potential concern (COPCs) from the perimeters of a cross-section of metal shredding facilities in a variety of geographic conditions across the state of California:

- particulate matter (PM) in the form of total suspended particulates (TSP);
- PM less than 10 micrograms (µm) (PM_{10});
- PM less than 2.5 µm ($PM_{2.5}$);
- metals including aluminum, antimony, arsenic, barium, beryllium, cadmium, calcium, chromium, cobalt, copper, iron, lead, manganese, molybdenum, nickel, selenium, silver, tin, vanadium, and zinc;
- asbestos; and
- toxic organic species (TOS) including benzene, chloromethane, 1,1-dichloroethene, ethylbenzene, 4-ethyltoluene, dichlorodifluoromethane [also known as (aka) Freon 12], trichlorofluoromethane (aka Freon 11), 1,2,4-trimethylbenzene, toluene, 1,3,5-trimethylbenzene, xylenes, vinyl chloride, poly-chlorinated biphenyls (PCB), and formaldehyde.

The DTSC intends to use the data generated from air monitoring to determine the potential for emissions from facilities generating and/or receiving metals shredding waste and evaluate the risk to sensitive populations using the criteria developed for the California Air Resources Board (ARB) Air Toxic Hot Spots Program Air Toxics "Hot Spot" Program [the Air Toxics Hot Spots Information and Assessment Act, Assembly Bill 288 (Connelly) as amended by SB 1731 (Calderon)].

3.2 Data Quality Objectives

DQOs for air monitoring, summarized in Table 1, represent the general and technical quality criteria that the analytical data should achieve to meet the objective of air monitoring. Rationale for proposed sampling locations and analytical suites are provided in Section 4.

Physical and temporal study boundaries of the DQOs are based on the following assumptions:

DRAFT

- Air samples will be collected from four locations at each Site with approximately one upwind, one downwind, and two crosswind samples. The samples will be representative of a 24-hour duration and will be performed over consecutive days at each Site.
- Additional spatial considerations will be in accordance with the sampling placement requirements listed in *40 CFR Appendix E to Part 58 - Probe and Monitoring Path Siting Criteria for Ambient Air Quality Monitoring*. As such, sampler inlets are required to be between 2 and 7 meters above ground level, greater than 2 meters away from supporting structures (like walls, parapets, or penthouses, greater than 10 meters from trees, and between 2 and 10 meters from roadways. Furthermore, because each of these sampling locations will have multiple collocated sampling devices present, the sampler inlets for any high volume samples (>200 liters per minute) must be at least 2 meters apart and the sampling inlets for low volume samplers (<200 L/min) will be spaced at least 1 meter apart, they must be spaced no greater than 4 meters apart, and the inlets should be within 1 meter of each other vertically.

Control of decision errors will be tracked using quality control (QC) samples collected during each monitoring round. Field-based QC parameters used for this study and associated frequency criteria are derived from USEPA guidance (USEPA, 2004) and are as follows:

- Collocated samples: analysis of collocated samples (sometimes referred to as duplicate samples for air sampling) is used to check for sampling and analysis error, reproducibility, and homogeneity. A collocated sample will be obtained by collecting a simultaneous sample from secondary samplers collocated with the primary samplers. One collocated sample will be collected per ten primary samples for the each of the TSP, PM_{10}, $PM_{2.5}$, asbestos and TOS samplers.
- Filter blanks: analysis of filter blanks (sometimes referred to as trip blanks for air sampling) is used to assess the contamination of samples from the native presence of target analytes in the filters used for air sample collection. A filter blank consists of a clean filter that is transported with associated primary samples, but is never taken out of its protective sleeve. A filter blank will be collected and analyzed for every 20 primary TSP, PM_{10}, $PM_{2.5}$, and asbestos samples.
- Field blanks: analysis of field blanks is used to assess the possible contamination of samples during sample collection. A field blank consists of a clean filter that is placed onto the air sampler and then taken off without running the sampler. A field blank will be collected and analyzed for every 20 primary TSP, PM_{10}, $PM_{2.5}$ samples.

Laboratory-based QC parameters to be used for this study are described in the selected laboratories' QAMP (CLN, 2014, EMSL, 2014) as follows:

- Precision and accuracy criteria for matrix spike/matrix spike duplicates (MS/MSD) and laboratory control sample/laboratory control sample duplicates (LCS/LCSD), run for each analytical batch are determined from the method or statistically by the laboratory for each analytical method. General ranges of relative percent difference (RPD) and percent recovery (%R) for each analysis to be run are 35% RPD and 75 to 125 %R.

DRAFT

- Calibration curves are checked daily and continuing calibration is performed for each analytical batch. Calibration curves shall be greater than a correlation coefficient of 0.995 (inorganics).
- Laboratory blanks to monitor introduced bias include method blanks, calibration blanks, and instrument blanks. Laboratory corrective action would occur at blank concentrations greater than 1/10 any sample concentration per analytical batch.
- Performance evaluation (PE) check samples are not proposed for this air monitoring program. The selected laboratory routinely participates in independent national and California laboratory PE certification and accreditation programs.

3.3 Data Quality Indicators

Data quality indicators (DQI) are criteria established to assess the quality and therefore the usability of data. These are based on both field and laboratory protocols that examine whether the DQIs (i.e., precision, accuracy, representativeness, completeness, comparability, and sensitivity [PARCCS]) meet criteria established for various aspects of data gathering, sampling, or analysis activity. Quantitative DQIs include precision, accuracy, completeness, and sensitivity (Table 2). Qualitative DQIs include representativeness and comparability. Sections 3.3.1 through 3.3.6 summarize information regarding the DQIs associated with the air monitoring program. Sample analytical results and laboratory QC data from air monitoring will be assessed for compliance with the DQIs.

3.3.1 Precision

Precision is the degree of mutual agreement between or among independent measures of a similar property (usually reported as a standard deviation [SD] or RPD) and relates to the analysis of duplicate laboratory or field samples. Laboratory analysis precision is usually assessed using laboratory duplicates. Precision related to sample collection in the field is typically assessed by collection and analysis of field duplicate samples.

The precision of laboratory analysis will be assessed by comparing the analytical results with MS/MSD results and/or laboratory duplicate results. For laboratory precision, performance goals will be:

- RPD between duplicate blank spikes less than or equal to 20%.
- RPD between laboratory duplicate samples less than or equal to 30% for analyte concentrations greater than or equal to five times the method detection limit (MDL), and the absolute concentration difference less than or equal to the MDL for analyte concentrations less than five times the MDL.
- RPD between MSDs less than or equal to 40%.

If these criteria are exceeded, the laboratory will investigate why and will include a discussion of the impact on data usability in the case narrative. If the cause of the exceedance is determined to be laboratory error, the laboratory will reanalyze the sample, as appropriate.

DRAFT

Precision related to sample collection in the field will be monitored as the difference between field duplicates. The RPD between field duplicates for samples with analyte concentrations greater than the MDL should be less than or equal to 40 percent. The absolute concentration difference between duplicate samples with concentrations less than five times the MDL will be less than or equal to the corresponding MDL.

3.3.2 Accuracy

Accuracy is the degree of agreement with a measurement of a known or true value and is generally determined by QC indicators such as MS, surrogate spikes, LCS and performance samples. The accuracy of laboratory results will be assessed using method blank, reagent and preparation blank, and/or MS/MSD results.

3.3.3 Representativeness

Representativeness expresses the degree to which sample data accurately and precisely represent the characteristics of a population, variations in parameters at a sampling point, or an environmental condition that they are intended to represent. Representativeness of data will be ensured through the consistent application of established field and laboratory procedures. To aid in the evaluation of the representativeness of the sample, field duplicate and laboratory blank samples will be evaluated for the presence of contaminants. Data determined by comparison with the existing data to be non-representative will be used only if accompanied by appropriate qualifiers and limits of uncertainty.

3.3.4 Completeness

Completeness is a measure of the amount of valid data obtained from a measurement system compared to the amount expected to be obtained under normal conditions. The completeness objective for field and laboratory data is 90%. Field measurements are expected to provide 90% or more data that meet the QC acceptance criteria and the laboratories will provide 95% or more data that meet the QC acceptance criteria. If 95% of the laboratory data meet these criteria, the data sets are considered complete.

If completeness is less than 90%, we will evaluate potential causes of data failure. These causes may include field issues (e.g., inadequate sample recovery due to electrical power problems, etc.), sample handling issues (broken or compromised sample containers, inadequately preserved samples, etc.), or laboratory issues (equipment failure, matrix interference, etc.). We will determine whether the degree of data failure significantly compromises the DQOs for the project. Factors influencing this decision may include the number of samples, the size of the Sites, the sampling objective, and the nature of potential contamination. If it is determined that corrective action is necessary, the laboratory may be requested to reanalyze samples and report both results. Re-collection of samples may also be appropriate in some cases.

DRAFT

3.3.5 Comparability

Comparability determines whether analytical conditions are sufficiently uniform for each analytical run to ensure that all reported data will be consistent. Comparability is ensured by using similar analytical methods from one Site to the next. Comparability will be maintained by adhering to consistent field sample collection and handling methods between sampling locations and using consistent laboratory procedures.

3.4 Data Review and Validation

Field and laboratory data will be reviewed to ensure that the type, quantity and quality of data used in decision-making are appropriate for intended applications. Our Project/Technical Manager will be responsible for review of field data and final laboratory reports. Analytical laboratory department managers will be responsible for review of analytical activities and data.

Field data verification by our Project/Technical Manager may be based on, but not limited to, communication with field personnel and review of personnel timesheets, field notes, sample chain-of-custody (COC) forms, and other documentation associated with field activities. Our field personnel will be responsible for implementing the sampling and documentation procedures summarized herein and for appropriately communicating information obtained in the field to our Project/Technical Manager. If possible, any inconsistencies with this SAP will be resolved immediately by our Project/Technical Manager based on consultation with field personnel.

Our Project/Technical Manager will be responsible for review, evaluation, and use of field and laboratory data with respect to qualitative and quantitative DQIs. Suspect data or data failing to meet acceptance criteria will be "flagged" with a qualifier identifying the associated problem. Based on their data review and evaluation results, our Project/Technical Manager will make judgments whether rejection of data, re-analysis of some samples, re-sampling, or other actions are appropriate to support project DQOs.

Our Project/Technical Manager will be responsible for review and approval of draft and final versions of investigative reports prepared by project staff. He will be responsible for ensuring that data presented in draft/final reports (e.g., in tables, on figures, and summarized in text) are compatible with accumulated field and laboratory data based on review of field documentation and laboratory reports. Our Project/Technical Manager will be responsible for ensuring that the project findings reported are technically accurate.

Laboratory analysts will be responsible for preparation of data packages in accordance with laboratory standard operating procedures (SOPs) that require the analyst to submit a data package to a department supervisor for review and verification of the analysis. A data package will be approved by a department

DRAFT

supervisor prior to sending it to client services for reporting. If there are problems or questions, the supervisor will send the entire data package back to the analyst for review.

3.5 Data Management

Our Project/Technical Manager will be responsible for the collection, storage, review, and use of field and laboratory data. Field personnel will be responsible for field data accumulation and documentation (e.g., in field logbooks) as summarized in this SAP and for appropriately transmitting data obtained in the field to our Project/Technical Manager.

Analytical laboratory department managers will be responsible for management of analytical data as specified in their document control and data storage procedures. The analytical laboratory's project manager will be responsible for transmittal of laboratory reports to our Project/Technical Manager.

Field and laboratory data will be archived in Geocon's files in hard-copy form and/or electronically as portable document format (PDF) or another appropriate format. Files and individual documents will be designated and dated according to a consistent convention to facilitate retrieval and review. Analytical data may be transferred to a spreadsheet or word processing program for analysis and/or presentation. Activities and responsibilities associated with data use and review are summarized in Section 3.4.

3.6 Assessment Oversight

Our field personnel will be responsible for completion of field sampling activities under the assessment oversight of our Project/Technical Manager as indicated in Section 3.4. To ensure rapid identification of potential problems or inconsistencies associated with this SAP or anomalous findings that could require revision of project objectives or activities, assessment oversight will be conducted as soon as possible after data become available and information will be transmitted from one level of oversight responsibility to another (e.g., from field technician to Project/Technical Manager and vice-versa) as soon as possible. Inconsistencies with this SAP or anomalous findings will be evaluated and addressed immediately by our Project/Technical Manager based on consultation with field personnel. With regard to their respective responsibilities, our field technicians and Project/Technical Manager will have authority to ensure that judgments regarding rejection of data, re-analysis of some samples, re-sampling, or other corrective actions appropriate to support project DQOs are implemented.

Analytical laboratory department managers will be responsible for oversight of analysts, analytical data management, and QA processes. The Laboratory Director and the Laboratory QA Director, with concurrence of the laboratory department managers, will direct corrective actions when problems that affect product or service quality are identified.

DRAFT

Our Project/Technical Manager will be responsible for assessment oversight of draft and final versions of air monitoring reports. He will be responsible for ensuring that the data presented in draft/final reports are compatible with accumulated field and laboratory data based on review of field documentation and laboratory reports. Our Project/Technical Manager will be responsible for ensuring that the air monitoring findings reported are technically accurate and that our associated conclusions and recommendations are technically justifiable.

DRAFT

4.0 SAMPLING DESIGN AND RATIONALE

The objective of the work described in this SAP is to assess concentrations of COPCs including various PM populations, metals, asbestos, and TOS, from a cross-section of metal shredding facilities in a variety of geographic conditions across the state of California. The DTSC intends to use the data generated during the air quality monitoring to determine the potential for emissions from facilities generating and/or receiving metals shredding waste and evaluate the risk to sensitive populations using the criteria developed for the California ARB Air Toxic Hot Spots Program Air Toxics "Hot Spot" Program [the Air Toxics Hot Spots Information and Assessment Act, Assembly Bill 288 (Connelly) as amended by SB 1731 (Calderon)].

We will perform three consecutive 24-hour air monitoring events at each of the three metal shredding facilities. At each Site, we will collect samples from four locations including upwind, cross-wind and downwind. Upwind samples will indicate the conditions of the air coming onto the facilities and serve as ambient or background levels. Downwind samples will indicate the conditions of the air leaving the facilities and are anticipated to contain the highest concentrations of COPCs. Cross-wind samples will serve to assess potential lateral dispersion of COPCs or may also serve as downwind locations as wind directions change. The proposed sample locations for the SMM, SARB, and SARTI facilities are shown on Figure 3, 5, and 7, respectively.

DRAFT

5.0 LABORATORY ANALYSIS

This section summarizes the laboratory analytical plans for air samples collected during implementation of this SAP. Specifically described are analytical parameters and methods, laboratory reporting limits, and sample hold times.

5.1 Analyses Narrative

The COCs will be analyzed by the following methods:

- TSP - 40 CFR Part 50, Appendix B to Part 50 *Reference Method for the Determination of Suspended Particulate Matter in the Atmosphere* (USEPA, 1998);
- PM_{10} - 40 CFR Part 50, *Appendix J to Part 50 Reference Method for the Determination of Particulate Matter as PM_{10} in the Atmosphere* (USEPA, 1998);
- $PM_{2.5}$ - 40 CFR Part 50, Appendix L to Part 50 *Reference Method for the Determination of Particulate Matter as PM2.5 in the Atmosphere* (USEPA, 1998) and *Quality Assurance Guidance Document 2.12 – Monitoring PM2.5 in Ambient Air Using Designated Reference or Class I Equivalent Methods* (USEPA, 2016);
- Asbestos - National Institute for Occupational Safety and Health (NIOSH) method 7402 (NIOSH, 1994);
- PCBs - NIOSH method 5503 (NIOSH, 1994);
- Formaldehyde - NIOSH method 2016 (NIOSH, 2003); and
- VOCs - USEPA method TO-15 (USEPA, 1999).

Sample container, preservation, and holding time requirements associated with the COPCs are summarized in Table 4. The laboratory reporting limits for the analyses planned for each air monitoring event are summarized in Table 5.

At each location we will collect a sufficient volume of sample for analysis and laboratory QC as specified in Section 10.0.

PM_{10} and $PM_{2.5}$ filters and formaldehyde sample cartridges will be placed in sample coolers, preserved at approximately 4 degrees Celsius (°C) with ice and shipped by courier to the laboratory under standard COC protocol. Unless the observations, experience, and judgment of supervisory field personnel in concurrence with the Project/Technical Manager determine otherwise based on unanticipated field conditions (i.e., emergency conditions that potentially threaten human health or the environment), samples will be analyzed on a standard 2-week turnaround time.

DRAFT

5.2 Analytical Laboratories

Samples to be analyzed for TSP, PM_{10}, $PM_{2.5}$ and metals will be submitted to CLN of Tigard, Oregon. CLN's QAMP and SOPs are in Appendix A and summarize the policies, practices, and procedures for ensuring that the quality of laboratory measurement data generated by CLN meets requirements of the National Environmental Laboratory Accreditation Program.

Samples to be analyzed for asbestos and TOS will be submitted to EMSL of San Leandro, California. The EMSL QAMP is in Appendix B.

CLN and EMSL will document laboratory data in written reports that will include sample results and copies of COCs. In addition, they will provide laboratory QC reports for surrogate recoveries, MS/MSD samples, and laboratory control sample/laboratory control sample duplicate LCS/LCSD samples as applicable. Activities and responsibilities associated with laboratory data review, data management, and assessment oversight processes are summarized in Section 3.4 (Data Review and Validation) and Section 3.5 (Data Management), as well as in CLN's and EMSL's QAMPs in Appendices A and B.

DRAFT

6.0 FIELD METHODS AND PROCEDURES

This section describes the air monitoring design and describes the rationale for the sampling locations and approach.

6.1 TSP

6.1.1 TSP Sampling Equipment

We will use Tisch Environmental Inc.'s (Tisch) TE-5170V high volume air sampler to perform TSP sampling. The TE-5170V is a volume flow-controlled, high-volume air sampler for TSP. The system components are housed in an anodized aluminum shelter that supports the vertically symmetrical TSP inlet. A blower assembly draws air through a quartz fiber filter which is held in place by a filter paper cartridge. A continuous flow/pressure recorder verifies the sample duration and ensures the target volume is achieved. Additional specifications for the TE-5170V are summarized in the following table:

High Volume TSP Sampler Specifications	
Manufacturer	Tisch Environmental, Inc.
Model	TE-5170V
Construction	Anodized aluminum
Filter Media	8"x10" Glass fiber filter
Flow Rate	0 - 44 cubic feet per minute (1,245 liters per minute)
Motor Blower	Brush-style motor assembly
Flow Indicator	Continuous flow/pressure recorder
Timer	10-day mechanical timer/elapsed time indicator
Electrical Supply	110/220VAC, 50/60 Hz, 8/4 Amps

6.1.2 TSP Sampling Method

TSP sampling will be conducted in accordance with *40 CFR Part 50, Appendix B to Part 50 Reference Method for the Determination of Suspended Particulate Matter in the Atmosphere* (USEPA, 1998). The sampling will involve collecting an integrated (i.e., continuous) 24-hour air sample on the specified sampling days.

Although the sampling equipment has a digital timer and mass flow controller, actual sample durations and flow rates may differ from targeted values. The actual laboratory detection limits achieved are dependent upon the laboratory instrument detection limit and sample volume obtained in the field. Note that sample volumes less than targeted values may result in higher than targeted detection limits.

The following sub-sections describe methods for: pre-sampling activities; calibration, and operation of the sampling equipment.

DRAFT

6.1.2.1 TSP Pre-Sampling Activities

We will conduct the following activities prior to sampling:

- Procure equipment from manufacturer or supplier which we anticipate will take up to 5 business days;
- Assemble the high-volume air sampler and become familiar with its operation;
- Calibrate the high-volume air sampler and enter calibration data into Sample Volume Calculation Sheet;
- Establish monitoring locations (e.g., upwind, cross-wind, and downwind) by reviewing data from the nearest meteorological station or by using dispersion modeling;
- Procure electrical generators and scissor lifts, as necessary; and
- Procure pre-weighted sample filters from laboratory.

6.1.2.1 TSP Calibration Activities

We will calibrate each high-volume air sampler upon installation or first use at each Site. We will calibrate the TE-5170V using the following step-by-step calibration procedures from the *Operations Manual TE-5170V Volumetric Flow Controlled Total Suspended Particulate High Volume Air Sampler* (Appendix C)

1. Mount the calibrator orifice and top loading adapter plate to the sampler. A sampling filter is generally not used during this procedure. Tighten the top loading adapter hold-down nuts securely for this procedure to assure that no air leaks are present.
2. Turn on the sampler and allow it to warm up to its normal operating temperature.
3. Conduct a leak test by covering the holes on top of the orifice and pressure tap on the orifice with your hands. Listen for a high-pitched squealing sound made by escaping air. If this sound is heard, a leak is present and the top loading adapter hold-down nuts need to be re-tightened.

   Avoid running the sampler for longer than 30 seconds at a time with the orifice blocked. This will reduce the chance of the motor overheating. Also, never try this leak test procedure with a manometer connected to the pressure tap on the calibration orifice or the pressure tap on the side of the sampler. Liquid from either manometer could be drawn into the system and cause motor damage.
4. Connect one side of a water manometer or other type of flow measurement device to the pressure tap on the side of the orifice with a rubber vacuum tube. Leave the opposite side of the manometer open to the atmosphere.
5. Connect a water manometer to the quick disconnect located on the side of the aluminum outdoor shelter (this quick disconnect is connected to the pressure tap on the side of the filter holder).

DRAFT

6. Make sure the TE-5028A orifice is all the way open (turn the black knob counter clockwise). Record both manometer readings, the one from the orifice and the other from the side of the sampler. To read a manometer one side goes up and the other side goes down, you add both sides, this is your inches of water. Repeat this process for the other four points by adjusting the knob on the variable orifice (just a slight turn) to four different positions and taking four different readings. You should have five sets of numbers, ten numbers in all.
7. Remove the variable orifice and the top loading adapter and install a clean filter. Set your timer.
8. Record the ambient air temperature, the ambient barometric pressure, the sampler serial number, the orifice serial number, the orifice Qactual slope and intercept with date last certified, todays date, site location and the operator's initials."

An example of the calibration sheet we will use is included in the Appendix C.

6.1.2.1 TSP Sampling Activities

We will collect the TSP samples using the following step-by-step sampling procedures from the *Operations Manual TE-5170V Volumetric Flow Controlled Total Suspended Particulate High Volume Air Sampler* (Appendix C)

1. After performing calibration procedure, remove filter holder frame by loosening the four wing nuts allowing the brass bolts and washers to swing down out of the way. Shift frame to one side and remove.
2. Don clean gloves and carefully center a new filter, rougher side up, on the supporting screen. Properly align the filter on the screen so that when the frame is in position the gasket will form an airtight seal on the outer edges of the filter. Note: Any filter that is noticeably torn or has a hole in it should immediately be invalidated and investigated on what caused the problem.
3. Secure the filter with the frame, brass bolts, and washers with sufficient pressure to avoid air leakage at the edges (make sure that the plastic washers are on top of the frame). IMPORTANT: make sure the filter cassette cover is removed.
4. Wipe any dirt accumulation from around the filter holder with a clean cloth.
5. Close shelter lid carefully and secure with the "S" hook.
6. Make sure all cords are plugged into their appropriate receptacles and the rubber tubing between the blower motor pressure tap and the TE-5009 continuous flow recorder is connected (be careful not to pinch tubing when closing door).
7. Prepare TE-5009 continuous flow recorder as follows:

   a. Clean any excess ink and moisture on the inside of recorder by wiping with a clean cloth.

   b. Depress pen arm lifter to raise pen point and carefully insert a fresh chart.

   c. Carefully align the tab of the chart to the drive hub of the recorder and press gently with thumb to lower chart center onto hub. Make sure chart is placed under the chart guide clip and the time index clip so it will rotate freely without binding. Set time by rotating the drive hub clockwise until the correct time on chart is aligned with time index pointer.

   d. Make sure the TE-160 pen point rests on the chart with sufficient pressure to make a visible trace.

DRAFT

8. Prepare the 7-Day Timer as instructed below.
   a. To set the "START" time, attach a (bright) "ON" tripper to the dial face on the desired "START" time. Tighten tripper screw securely.
   b. To set the "STOP" time, attach a (dark) "OFF" tripper to the dial face on the desired "STOP" time. Tighten tripper screw securely.
   c. To set current time and day, grasp dial and rotate **clockwise only** until correct time and day appear at time pointer.
9. At the end of the sampling period, remove the frame to expose the filter. Don new gloves and carefully remove the exposed filter from the supporting screen by holding it gently at the ends (not at the corners). Fold the filter lengthwise so that sample touches sample.
10. Place the folded filter in the protective manila folder. Apply a sample label to the manila folder. CAUTION: do not write on the filter or attach a sample label.
11. Place the filter/manila folder in a large Zip-lock bag. Keep filters out of sunlight and maintain at room temperature. CAUTION: do not chill samples.
12. Fill out the COC and place in a small Fed-Ex box with the samples. Include any field QC samples as necessary. It is critical to ship the samples in a rigid container such as a cardboard Fed-Ex box for protection. The box should not be so large that the samples move around. Add padding as necessary.
13. Typical sample hold times prior to laboratory analysis are 6 months for gravimetric TSP and most metals (mercury analysis is 28 days).

6.2 PM_{10}

6.2.1 PM_{10} Sampling Equipment

We will use Tisch's TE-Wilbur10 low-volume air sampler to perform the PM_{10} sampling. The TE-Wilbur10 sampler is housed in an anodized aluminum shelter that supports the vertically symmetric PM_{10} inlet. A blower assembly draws air through the 46.2-millimeter-diameter polytetrafluoroethylene (PTFE) Teflon™ filter. The system monitors and records all system sensors such as flow, temperatures and barometric pressure, and also records the system pressure, filter temperature variation, and flow total which provides the operator or laboratory technician additional information on the sample if warnings or alarms occurred during the sample run. Additional specifications for the TE-Wilbur10 sampler are summarized in the following table:

Low Volume PM_{10} Sampler Specifications	
Manufacturer	Tisch Environmental, Inc.
Model	TE-Wilbur10
Construction	Anodized aluminum
Filter Media	46.2 mm-diameter PTFE Teflon™ with integral support ring with a pore size of 10 µm
Inlet	10-micron particulate fractionator (TE-PM_{10})
Flow Rate	0 – 25 liters per minute

DRAFT

Low Volume PM_{10} Sampler Specifications	
Motor Blower	Brushless 24 VDC motor with a diaphragm-type pump
Flow Indicator	Thermal mass-type ranged from 0-25 liters per minute (TE-W-150)
Timer	Digital timer/elapsed time indicator
Electrical Supply	120/240 VAC, 50/60 Hz, 5 Amps

6.2.2 PM_{10} Sampling Method

PM_{10} sampling will be conducted in accordance with *40 CFR Part 50, Appendix J to Part 50 Reference Method for the Determination of Particulate Matter as PM_{10} in the Atmosphere* (USEPA, 1998). The sampling will involve collecting an integrated (i.e., continuous) 24-hour air sample from on the specified sampling days.

Although the sampling equipment has a digital timer and mass flow controller, actual sample durations and flow rates may differ from targeted values. The actual laboratory detection limits achieved are dependent upon the laboratory instrument detection limit and sample volume obtained in the field. Note that sample volumes less than targeted values may result in higher than targeted detection limits.

The following sub-sections describe methods for: pre-sampling activities; calibration, and operation of the sampling equipment.

6.2.2.1 PM_{10} Pre-Sampling Activities

We will conduct the following activities prior to sampling:

- Procure equipment from manufacturer or supplier which we anticipate will take up to 5 business days;
- Assemble the air sampler and become familiar with its operation;
- Calibrate the air sampler and enter calibration data into Sample Volume Calculation Sheet;
- Establish monitoring locations (e.g., upwind, cross-wind, and downwind) by reviewing data from the nearest meteorological station or by using dispersion modeling;
- Procure electrical generators and scissor lifts, as necessary; and
- Procure pre-weighted sample filters from laboratory.

6.2.2.2 PM_{10} Calibration Activities

We will calibrate each TE-Wilbur10 air sampler upon installation or first use at each Site using the following calibration procedures from the *TE-Wilbur Operations Manual Rev 002.2, 01/07/2016* (Appendix D)

DRAFT

Ambient Temperature Calibration

1. Obtain a calibrated temperature device such as the Tisch FRM-CAL low-volume calibration system.
2. Allow the calibrated temperature device to reach equilibrium with the ambient air and take a reading on the calibrated temperature device.
3. The temperature calibration can be performed by following these keystrokes:

   Main Menu ➔ Calibration➔ Ambient Temperature Calibration
4. Press the box and enter the temperature reading from the calibrator.
5. Press **Update** to update the temperature.

Filter Temperature Calibration

1. Obtain a calibrated temperature device such as the Tisch FRM-CAL low volume calibrator.
2. Allow the calibrated temperature device to reach equilibrium with the ambient air.
3. Place the temperature device into the filter holder holding it at the tip of the filter temperature RTD.
4. The temperature calibration can be performed by following these keystrokes:

   Main Menu ➔ Calibration➔ Filter Temperature Calibration
5. Press the box and enter the temperature reading from the calibrator.
6. Press **Update** to update the temperature.

Barometric Pressure Calibration

1. Obtain a calibrated barometric device such as the Tisch FRM-CAL low volume calibrator.
2. Allow the calibrated barometric pressure device to reach equilibrium with the ambient air.
3. The barometric calibration can be performed by following these keystrokes:

   Main Menu ➔ Calibration➔ Barometric Press Calibration
4. Press the box and enter the pressure reading from the calibrator.
5. Press **Update** to update the barometric pressure.

Flow Calibration

1. Flow calibration can be performed by following these keystrokes:

   Main Menu ➔ Calibration ➔ Flow Calibration
2. Place a known, calibrated flow standard onto the downtube of the TE-Wilbur unit such as the Tisch FRM-CAL low volume calibrator. This calibrator should be within its certification period.
3. Place a filter cassette with a screen and filter into the filter holder and close the filter holder. NOTE: this filter cannot be used for subsequent sampling per USEPA Quality Assurance Guidance Document 2.12.

DRAFT

4. Proceed to the setpoint screen where the user can change the setpoint of the flow calibration. 16.67 Liters per minute (L/min) is the default setpoint and should only be changed under abnormal operations.
5. Press **Start** and the Calibration Point 1 screen will be displayed and the flow system will start and will achieve the first setpoint. The setpoint and flow is shown on the left.
6. After the flow stabilizes, take a reading from the calibrator and press the blue box to enter the calibrator's reading.
7. Press the green **Accept** box to accept that reading and continue to setpoint number two.
8. Perform setpoints two, three and four. After the fourth setpoint the final flow calibration screen will appear.
9. The user is presented with the slope, intercept and R coefficient of the four-point linear regression formula. If the R coefficient is less than 0.98 the user is notified that the calibration needs attention.
10. If the R coefficient is greater than 0.98 and the user feels that the calibration was successful they can save the calibration values by pressing the **Yes Save** button. If the user does not want to save the calibration settings, they can press **No Quit** and the last calibration values will be used for flow adjustment.

Flow Calibration Audit / Verification

1. Each flow setpoint has a corresponding START button below it. Press each start button to have the flow system reach that flow setpoint.
2. Let the flow stabilize at that setpoint and compare the reading with a calibrated flow device such as a Tisch FRM-CAL low volume calibrator.
3. Press the STOP button or press the Calibration Main Menu return button to stop the flow verification.

External Leak Check

1. Insert a clean filter (designated the "leak check filter") into a filter cassette with a screen and insert the cassette into the sampler filter holder.
2. **NOTE**: Leak check filters will not be used for subsequent sampling. The same filter may be used for the leak check that was used for the flow rate verification check.
3. Close the filter holder
4. Remove the PM_{10} inlet and install the TE-L30 flow rate adapter on the top of the downtube.
5. Close the valve on the flow rate adapter to plug the air flow.
6. Press the Select External Leak Check button on the Leak check selection screen.
7. At the Perform External Leak Check Next Steps screen, the screen will show the TE-L30 adapter closed and the filter holder closed. Press next step and then press the Final Step button.
8. You will now be at the Leak Check Control Screen. Press the **Start Leak Check** button.

DRAFT

9. The system will start the pump and pull a vacuum on the system. **NOTE:** if the TE-L30 adapter is not closed and the vacuum does not reach 50" H_2O, after 60 seconds the system will stop and fail.
10. Once the system pulls a vacuum of 50" H_2O, the solenoid will close, isolating the system from the solenoid to the TE-L30 adapter. The final ending pressure will be much greater than 50" H_2O since the system will stabilize to a final ending pressure.
11. After 20 seconds to allow the system to stabilize, the leak check timer of 60 seconds will start and the system will calculate the final ending pressure in order to pass an external leak check of less than 80mL/min.
12. If the external leak check passes, a green box will appear after the leak check timer expires indicating the external leak check has passed.
13. If the external leak check fails, meaning the vacuum pressure has dropped below the final ending pressure, meaning a leak of more than 80mL/min is present, a red box will appear after the leak check timer expires indicating the external leak check has failed.
14. To cancel the external leak check, press the **Cancel Leak Check** button at any point or press the return to main menu button.
15. After the external leak check is completed, open the TE-L30 adapter slowly to prevent any damage from the inrush of air into the system.

Internal Leak Check

1. Place the TE-W-004 Solid internal leak check disk into the filter holder.
2. Close the filter holder.
3. Press the **Perform Internal Leak Check** at the leak check select screen.
4. At the step 1 screen press next step to go to the step 2 screen.
5. At the step 2 screen press final step to go to the leak check control screen.
6. Press the **Start Leak Check** button.
7. The system will start the pump and pull a vacuum on the system. Note: if the system vacuum does not reach 50" H_2O, after 60 seconds the system will stop and fail.
8. Once the system pulls a vacuum of 50" H_2O, the solenoid will close, isolating the system from the solenoid to the bottom half of the filter cassette. The final ending pressure will be greater than 50" H_2O since the system will stabilize to a final ending pressure.
9. After 20 seconds to allow the system to stabilize, the leak check timer of 60 seconds will start and the system will calculate the final ending pressure in order to pass an internal leak check of less than 80mL/min.
9. If the internal leak check passes, a green box will appear after the leak check timer expires indicating the leak check has passed.
10. If the internal leak check fails, meaning the vacuum pressure has dropped below the final ending pressure, a red box will appear after the leak check timer expires indicating the internal leak check has failed.
11. To cancel the internal leak check, press the **Cancel Leak Check** button at any point or press the return to main menu button.

DRAFT

12. After the internal leak check is completed, remove the internal leak check disk and return unit back to normal operation.

6.2.2.3 PM_{10} Sampling Activities

We will use the following procedures to operate the TE-Wilbur10 air sampler:

1. Annotate the following information on the sampler run data sheet, in the sampler logbook, and/or on the sample COC making note of the following:
    a. Date and time of sampler setup visit,
    b. Site identification and location,
    c. Sampler model, unique sample ID number (this may be the cassette and/or filter ID number, or some other tracking number),
    d. Scheduled sample start date and time, unusual conditions that may affect samples (e.g., subjective evaluation of pollution on that day, construction activity, weather conditions), and
    e. Setup operator's signature or initials.

    An example of the data sheet to be used is in Appendix D. Because sampler data are electronically downloaded and archived, table entry of data relative to the run start and end operating conditions may not need to be made, so long as the information is properly documented in electronic format and appropriately stored.
2. Ensure the sampler is not operating. If the sampler is set to automatically begin operation, ensure that enough time is available to complete these setup procedures before it starts.
3. Open the filter holder assembly according to the manufacturer's instructions. Visually inspect the O-rings inside the filter holder to ascertain that they are present, secure and not cracked. Do not sample without these O-rings installed because the system will no longer be leak-free. Install the uniquely identified filter cassette containing the pre-weighed filter. Never remove the filter from the cassette. This is done only at the filter weighing facility. Reinstall the filter cassette holder and ensure that the fittings around the impactor housing and the filter assembly are secure.
4. Set up the TE-Wilbur10 for a custom sample by following these keystrokes

    Main Menu ➔ Sample Setup ➔ Set Custom Sample
5. Enter a start month /day / year / hour / minute and duration of 24 hours. The sampler will then start on the date entered and run for the duration of the runtime entered. We will coordinate so that when multiple TE-Wilbur10 are sampling at a Site, that they each start and the same time. All alarms associated with shutting down a sample, data logging and all features of the USEPA standard samples are associated with the custom sample.
6. When a custom sample is engaged, all screens will show a blue box indicating that a custom sample has been setup and engaged. When a custom sample is running a green box will show on all screens that a sample is running.
7. The sampler is now ready to sample. If the sampler is not already set to turn on automatically for the next sampling period, program the controls to do so. Check clock on sampler to make certain it is accurate to within 1 minute of an atomic clock and set to local standard time.

DRAFT

8. Visually inspect the monitoring site and its equipment to ensure that all sampling components are ready for the next run day(s). Note any changes in the site surroundings, especially dust-producing activities.

9. Visually inspect the records of the sampler. If it is time for the monthly/every 4 weeks' check, measure and record independent measurements of ambient temperature and pressure, and ensure that the ambient temperature (i.e., inlet temperature) and pressure readings taken by the sampler are within 2.0 □C and 10 mmHg of the independent readings, respectively. Be certain that the independent temperature sensor (thermometer or thermistor probe) is located side-by-side with the sampler's ambient temperature sensor. This will require that the sensor be placed in the louvers of the sampler's radiation shield and kept out of direct sunlight. Also check the sampler's display for the filter temperature and ensure this value is reasonable compared to the ambient temperature display.

10. At the end of the sampling run, visually inspect the sampler readouts to ensure that the sampler is operating properly. Sequential samplers require manipulation of a number of display screens to retrieve all data. Consult the operating manual. Also check the sampler for any other obvious problems, such as a full water collection jar. If problems are identified, describe them on the sample run data sheet and take corrective actions before starting another run. If the weather is bad, provide a temporary shelter to facilitate data transfer and to protect exposed parts of the sampler. A small work table may be useful.

11. Record the following information on the sampler run data sheet, in the sampler logbook, and/or on the sample COC making note of the following:

    a. Date and sample pick-up time,
    b. Stop time and total elapsed time of the sample run,
    c. Average flow rate, coefficient of variation of the flow rate, and total volume sampled,
    d. Average temperature and pressure measured by the sampler during the sampling event,
    e. Conditions at the site or of the collector that may have affected the sample,
    f. Any flags triggered by the sampler (e.g., power outage, flow rate variation),
    g. Explanations for questionable or voided samples,
    h. Collecting operator's signature or initials.

12. Download the runtime data (e.g., sampler filter, interval, and input data files) for the completed run using a laptop computer or another data transfer device.

13. Carefully open the sampler's filter holder assembly according to the manufacturer's instructions. If the filter cassette comes apart or sticks to the upper housing during this process, close and gently reopen the assembly. Do not allow the filter to be shaken, dropped, or touched by any foreign object (fingers, rain, and so on). Visually examine the filter and cassette for damage or unusual appearance. Make notes and then immediately place the filter cassette inside an appropriately marked protective container (see Figure 4.2) for storage and later transport to the weighing laboratory.

14. Inspect the interior of the filter housing and the sampler itself. Note any abnormalities on the sampler run data sheet.

15. Conduct any scheduled maintenance activities.

DRAFT

16. If another sampling run will be performed, install a filter cassette according to the aforementioned instructions.
17. Observe conditions around the monitoring site; note any activities that may affect filter particle loading (e.g., paving, mowing, fire) and record this information on the run data sheet. Retrieve equipment and applicable documentation. Secure the site.

6.3 $PM_{2.5}$

6.3.1 $PM_{2.5}$ Sampling Equipment

We will use Tisch's TE-Wilbur2.5 low-volume air sampler to perform the $PM_{2.5}$ sampling. The TE-Wilbur2.5 is the same sampling equipment as the TE-Wilbur10 with the exception that the TW-Wilbur2.5 has a TE-PM2.5C cyclone or WINS impactor installed downstream of the PM_{10} size inlet. Additional specifications for the TE-Wilbur2.5 samplers are summarized in the following table:

Low Volume $PM_{2.5}$ Sampler Specifications	
Manufacturer	Tisch Environmental, Inc.
Model	TE-Wilbur2.5
Construction	Anodized aluminum
Filter Media	46.2 mm-diameter PTFE Teflon with integral support ring with a pore size of 10 µm
Inlet	10-micron particulate fractionator with a PM2.5 Cyclone (TE-$PM_{2.5}$C)
Flow Rate	0 – 25 liters per minute
Motor Blower	Brushless 24 VDC motor with a diaphragm-type pump
Flow Indicator	Thermal mass-type ranged from 0-25 liters per minute (TE-W-150)
Timer	Timer Digital timer/elapsed time indicator
Electrical Supply	120/240 VAC, 50/60 Hz, 5 Amps

DRAFT

6.3.2 $PM_{2.5}$ Sampling Method

$PM_{2.5}$ sampling will be conducted in accordance with *40 CFR Part 50, Appendix L to Part 50 Reference Method for the Determination of Particulate Matter as $PM_{2.5}$ in the Atmosphere.* (USEPA, 1998) and *Quality Assurance Guidance Document 2.12 – Monitoring PM2.5 in Ambient Air Using Designated Reference or Class I Equivalent Methods* (USEPA, 2016). The sampling will involve collecting an integrated (i.e., continuous) 24-hour air sample on the specified sampling days.

We will follow the same pre-sampling activities, calibration, and operations steps that we use for the PM_{10} sampling, as described in Section 4.2.2.

6.4 Asbestos

6.4.1 Asbestos Sampling Equipment

We will use Gillian GilAir 3 sampling pumps equipped with a 25-mm-diameter mixed cellulose ester (MCE) fiber filter to collect the asbestos samples. The GilAir 3 sampling pumps will be set to operate at a flowrate of 0.55 liters per minute (L/min).

6.4.2 Asbestos Sampling Methods

Asbestos sampling will be conducted in accordance with National Institute for Occupational Safety and Health (NIOSH) method 7402 (NIOSH, 1994).

The NIOSH method recommends a sample volume of 400 L and minimum flow rate of 0.5 L/min. If we collected a sample at a rate of 0.5 L/min for a 24-hour duration, then our resulting sampling volume would exceed the recommended 400 L. Therefore, we recommend either performing one 12-hour sample during the hours when we anticipate the highest amount of activity and metal shredding occurring at the Sites or collecting two successive 12-hour samples to represent a full 24-hour period.

6.4.2.1 Asbestos Pre-Sampling Activities

We will conduct the following activities prior to sampling:

- Procure equipment from manufacturer or supplier;
- Assemble the pump and become familiar with its operation;
- Calibrate the pump to the desired flow rate of 0.55 L/min; and
- Charge the GilAir 3 pumps and additional batteries to be used during the sampling;
- Procure sample filters from laboratory.

6.4.2.2 Asbestos Calibration Activities

We will calibrate each GilAir 3 pump upon installation or first use at each Site using the following calibration procedures:

1. Use a GilAir-3 pump with a fully charged battery pack.
2. Attach tubing to the pump.
3. Connect an MCE filter to the tubing. Note: Calibration filters will not be used for subsequent sampling.
4. Connect the tubing from the collection media to an external calibrated flow meter.
5. Use a small Phillips screwdriver to loosen the side anti-tamper plate screw.
6. Rotate the side cover plate 180°.

DRAFT

7. Use a pointed instrument such as a ball-point pen or paper clip bent 90° to press the MODE/HOLD button twice. CAL should appear on the display. CAL allows you to run the pump without actually collecting run data.
8. Use a small Phillips screwdriver to loosen the front anti-tamper plate screw.
9. Rotate the front cover plate 180°.
10. Move On/Off switch to the On position.
11. Make sure the calibrated external flow meter is working.
12. Set the pump flow rate by turning the flow adjust screw. (Clockwise for increased flow and counterclockwise for decreased flow.) Use built-in rotameter only as a flow indicator.
13. When desired flow rate has been reached, turn off pump. The pump is now ready for sampling.

6.4.2.3 Asbestos Sampling Activities

We will collect asbestos samples using the following sampling procedures:

1. Following calibration activities, attach an MCE filter to the pump via tubing.
2. Record the following information on the sampler run data sheet, in the sampler logbook, and/or on the sample COC making note of the following:
    a. Date and time of sampler setup visit,
    b. Site identification and location,
    c. Sampler model, unique sample ID number (this may be the cassette and/or filter ID number, or some other tracking number),
    d. Scheduled sample start date and time, unusual conditions that may affect samples (e.g., subjective evaluation of pollution on that day, construction activity, weather conditions), and
    e. Setup operator's signature or initials.
3. Move the On/Off switch to the On position.
4. Place the pump, tubing and cassette in the desired sampling location.
5. When sampling is completed, move the On/Off switch to the Off position. Record the following information on the sampler run data sheet, in the sampler logbook, and/or on the sample COC making note of the following:
    a. Date and sample pick-up time,
    b. Stop time and total elapsed time of the sample run,
    c. Average flow rate, coefficient of variation of the flow rate, and total volume sampled,
    d. Conditions at the site or of the collector that may have affected the sample,
    e. Any flags triggered by the sampler (e.g., power outage, flow rate variation),
    f. Explanations for questionable or voided samples, and
    g. Collecting operator's signature or initials.

DRAFT

6.5 PCBs

6.5.1 PCB Sampling Equipment

We will use Gillian GilAir 3 sampling pumps equipped with a 13-mm glass fiber filter without binders in a Swinnex cassette (Cat. No. SX 0001300, Millipore Corp.) followed by a glass tube, 7-cm-long, 6-mm-OD, 4-mm-ID containing two sections of 30/48 mesh deactivated Florisil to collect the PCB samples. The GilAir 3 sampling pumps will be set to operate at a flowrate of 1 L/min.

6.5.2 PCB Sampling Methods

PCB sampling will be conducted in accordance with NIOSH method 5503 (NIOSH, 1994).

The NIOSH method states that at low concentrations, the sampler was found to be efficient when operated at flow rates up to 1 L/min, for 24 hours.

6.5.2.1 PCB Pre-Sampling Activities

We will conduct the following activities prior to sampling:

- Procure equipment from manufacturer or supplier;
- Assemble the pump and become familiar with its operation;
- Calibrate the pump to the desired flow rate of 1 L/min;
- Charge the GilAir 3 pumps and additional batteries to be used during the sampling; and
- Procure sample filters from laboratory.

6.5.2.2 PCB Calibration Activities

We will calibrate each GilAir 3 pump upon installation or first use at each Site using the same calibration procedures described in Section 4.4.2.2.

6.5.2.3 PCB Sampling Activities

We will collect PCB samples using the following sampling procedures:

1. Record the following information on the sampler run data sheet, in the sampler logbook, and/or on the sample COC making note of the following:
    a. Date and time of sampler setup visit,
    b. Site identification and location,
    c. Sampler model, unique sample ID number (this may be the cassette and/or filter ID number, or some other tracking number),

DRAFT

d. Scheduled sample start date and time, unusual conditions that may affect samples (e.g., subjective evaluation of pollution on that day, construction activity, weather conditions), and

e. Setup operator's signature or initials.

2. Break the ends of the Florisil tube immediately before sampling. We will then connect the Florisil tube to Swinnex cassette and attach the sampler to GilAir 3 pump with flexible tubing.
3. Move the On/Off switch to the On position.
4. Place the pump, tubing and cassette in the desired sampling location.
5. When sampling is completed, move the On/Off switch to the Off position. Then transfer the glass fiber filters to 7-mL vials and cap the Florisil tubes with plastic (not rubber) caps. Pack the vials and tubes securely for shipment to the laboratory.
6. Record the following information on the sampler run data sheet, in the sampler logbook, and/or on the sample COC making note of the following:

    a. Date and sample pick-up time,

    b. Stop time and total elapsed time of the sample run,

    c. Average flow rate, coefficient of variation of the flow rate, and total volume sampled,

    d. Conditions at the site or of the collector that may have affected the sample,

    e. Any flags triggered by the sampler (e.g., power outage, flow rate variation),

    f. Explanations for questionable or voided samples,

    g. Collecting operator's signature or initials.

6.6 Formaldehyde

6.6.1 Formaldehyde Sampling Equipment

We will use Gillian GilAir 3 sampling pumps equipped with a plastic holder containing 0.35 g of 150-250 µm (60-100 mesh) silica gel coated with 1.0 mg of acidified 2,4-dinitrophenylhydrazine to collect the formaldehyde samples. The GilAir 3 sampling pumps will be set to operate at a flowrate of 1 L/min.

6.6.2 Formaldehyde Sampling Methods

Formaldehyde sampling will be conducted in accordance with NIOSH method 2016 (NIOSH, 2003). The NIOSH method recommends a sample volume of 15 L and minimum flow rate of 0.03 L/min. However, if we collect a sample at a rate of 0.03 L/min for a 24-hour duration, then our resulting sampling volume of 43.2 L would exceed the recommended 15 L. Therefore, we recommend either performing one 8-hour sample during the hours when we anticipate the highest amount of activity and metal shredding occurring at the Site or collecting three successive 8 hour samples to represent a full 24-hour period.

DRAFT

6.6.2.1 Formaldehyde Pre-Sampling Activities

We will conduct the following activities prior to sampling:

- Procure equipment from manufacturer or supplier;
- Assemble the pump and become familiar with its operation;
- Calibrate the pump to the desired flow rate of 0.03 L/min;
- Charge the GilAir 3 pumps and additional batteries to be used during the sampling; and
- Procure sample filters from laboratory.

6.6.2.2 Formaldehyde Calibration Activities

We will calibrate each GilAir 3 pump upon installation or first use at each Site using the same calibration procedures described in Section 4.4.2.2.

6.6.2.3 Formaldehyde Sampling Activities

We will collect formaldehyde samples using the following sampling procedures:

1. Record the following information on the sampler run data sheet, in the sampler logbook, and/or on the sample COC making note of the following:
    a. Date and time of sampler setup visit,
    b. Site identification and location,
    c. Sampler model, unique sample ID number (this may be the cassette and/or filter ID number, or some other tracking number),
    d. Scheduled sample start date and time, unusual conditions that may affect samples (e.g., subjective evaluation of pollution on that day, construction activity, weather conditions), and
    e. Setup operator's signature or initials.
2. Open sampler packers by removing end caps and attach sampler to GilAir 3 pump with flexible tubing. To protect from intense light, such as bright sunlight, we will wrap the sampler with aluminum foil or electrical tape.
3. Move the On/Off switch to the On position.
4. Place the pump, tubing and cassette in the desired sampling location.
5. When sampling is completed, move the On/Off switch to the Off position. Place end caps on the sampler and seal sampler in an envelope. Place the samplers on ice and pack securely for shipment to the laboratory.
6. Record the following information on the sampler run data sheet, in the sampler logbook, and/or on the sample COC making note of the following:
    a. Date and sample pick-up time,
    b. Stop time and total elapsed time of the sample run,
    c. Average flow rate, coefficient of variation of the flow rate, and total volume sampled,

DRAFT

d. Conditions at the site or of the collector that may have affected the sample,

e. Any flags triggered by the sampler (e.g., power outage, flow rate variation),

f. Explanations for questionable or voided samples,

g. Collecting operator's signature or initials.

6.7 VOC

6.7.1 VOC Sampling Equipment

We will use 6-L Summa canisters equipped with 24-hour flow regulators to collect VOC samples. The flow regulators will be set to operate at a flowrate of 3.8 mL/min.

6.7.2 VOC Sampling Methods

VOC sampling will be conducted in accordance with USEPA method TO-15 (USEPA, 1999).

6.7.2.1 VOC Pre-Sampling Activities

We will conduct the following activities prior to sampling:

- Procure sampling equipment from laboratory;
- Assemble the samplers and become familiar with its operation;
- Verify the vacuum levels in the canisters.

6.7.2.2 VOC Certification

EMSL will individually certify each 6-L Summa canister.

6.7.2.3 VOC Sampling Activities

1. We will collect VOC samples using the following sampling procedures:
2. Record the following information on the sampler run data sheet, in the sampler logbook, and/or on the sample COC making note of the following:
    a. Date and time of sampler setup visit,
    b. Site identification and location,
    c. Sampler model, unique sample ID number (this may be the Summa canister and/or flow restrictor ID number, or some other tracking number),
    d. Scheduled sample start date and time, unusual conditions that may affect samples (e.g., subjective evaluation of pollution on that day, construction activity, weather conditions), and
    e. Setup operator's signature or initials.

DRAFT

3. Vacuum test the connections between the Summa canister and flow restrictor for 5 minutes by placing an end cap on the sampling inlet and opening and closing the canister to place a test vacuum on the assembly.
4. If gauge vacuum was maintained for 5 minutes, then remove the end cap and begin sampling by opening the Summa canister valve.
5. Close the sample canister valve when the sample canister gauge indicates approximately 5 inches Hg of vacuum remain in the canister (this typically takes approximately 24 hours for a 6L Summa canister connected to a 3.8 milliliters/minute flow regulator).
6. Record the following information on the sampler run data sheet, in the sampler logbook, and/or on the sample COC making note of the following:
    a. Date and sample pick-up time,
    b. Stop time and total elapsed time of the sample run,
    c. Total volume sampled,
    d. Conditions at the site or of the collector that may have affected the sample,
    e. Explanations for questionable or voided samples,
    f. Collecting operator's signature or initials.
7. Seal the samples and prepare them for transport to EMSL following standard COC protocol.

6.8 Meteorological Data

6.8.1 Meteorological Monitoring Equipment

We will collect meteorological data from the Sites using a Davis Vantage Pro2 weather monitoring station. We will record site-specific data for wind direction, speed, temperature, relative humidity, and pressure.

6.8.2 Meteorological Monitoring Procedures

We will collect meteorological data at the beginning and the end of each 24-hour sampling period. Also, at the end of each 24-hour sampling period, we will record the highs and lows for the preceding 24 hours. We will also request a copy of each Site's weather station data, as each Site operates their own onsite weather station.

DRAFT

7.0 SAMPLE CONTAINERS, PRESERVATION AND STORAGE

Information regarding sample container, preservation, and storage requirements for these air monitoring events is addressed in CLN's and EMSL' QAMPs, which are in Appendices A and B. Table 3, Sampling Frequency and Analysis, lists the analyses that are planned to assess the presence and concentration of the COCs in air onsite. Sample container, preservation, and holding time requirements associated with the COCs are summarized in Table 4.

DRAFT

8.0 DISPOSAL OF RESIDUAL MATERIALS

Based on the proposed scope of services, we anticipate to general very minimal residual materials. We will place used sampling materials and disposable personal protective equipment, such as filters and gloves, in garbage bags which we will dispose of as municipal refuse.

DRAFT

9.0 SAMPLE DOCUMENTATION

This section summarizes the procedures regarding sample documentation. Geocon Field Supervisors will be responsible for implementing the documentation procedures summarized in this SAP and for appropriately communicating information obtained in the field to Geocon's Project Manager. If possible, any problems or inconsistencies regarding sample documentation procedures will be resolved immediately by our Project/Technical Manager based on consultation with Field Supervisors.

9.1 Field Notes

A notebook containing daily field logs will be used to record sample identification numbers, COC numbers, and any significant events or observations made during sampling. The daily field log is intended to record events during sampling activities in sufficient detail to allow field personnel to reconstruct events that transpired during the project. The project name, project number, site location, project leader, telephone number and address of contact office (should the book be misplaced or lost) are recorded on the log daily.

Custodianship of this logbook will be the responsibility of the Geocon Field Supervisor, who, in turn, will submit this to the Geocon Project Manager following completion of field activities. If it is necessary to transfer the notebook to alternative personnel during the course of fieldwork, the person relinquishing the logbook will sign and date the daily log at the time of transfer, and the person receiving the daily logs will do likewise. Erroneous data will be corrected by crossing out data with a single line, adding the correct information, and initialing and dating the correction. Unused portions of the daily log will be crossed out, signed, and dated at the end of each work day.

9.2 Labeling

An appropriate self-adhesive sample label will be affixed to each sample container. Sample container labels will indicate the unique sample number, sample date and time, sample location, sampler name or initials, requested analysis, and preservation used.

Information recorded on labels will be written legibly with permanent black ink in a clear and precise manner for proper identification in the field and subsequent tracking in the laboratory and at the disposal facility.

9.3 Sample COC Forms

Sample COC forms will be completed as sampling activities progress to record unique sample numbers, sample collection dates and times, and requested analyses and to provide sample tracking documentation in the field and laboratory. Each sample shipment cooler sent to the laboratory for

DRAFT

analyses will be accompanied by an original COC specific for the shipment contents that bears the original signatures of sample custodians. Sample CLN and EMSL COC forms are in Appendices A and B, respectively.

Information recorded on COC forms will be written legibly with permanent black ink in a clear and precise manner for proper identification in the field and subsequent tracking in the laboratory and/or at the disposal facility. Our Field Supervisors will be responsible for completing/maintaining chain-of-custodies until samples are shipped to the laboratory. Laboratory procedures and personnel responsibilities with respect to sample receipt, log-in, storage, and tracking in the laboratory are summarized in CLN and EMSL's QAMPs (Appendices A and B, respectively).

DRAFT

10.0 QUALITY CONTROL

This section summarizes the QC procedures for each monitoring event to ensure that the type, quantity, and quality of data used in decision-making are useful for intended applications and will support project objectives. Our Project/Technical Manager will be responsible for overall QC for all monitoring events. Analytical laboratory department managers will be responsible for laboratory QC as specified in the laboratory-specific QAMPs.

The following sections summarize QC procedures with respect to field QC samples, background samples, field screening and confirmation samples, and laboratory QC samples.

10.1 Field QC Samples

Field sampling and laboratory precision will be assessed through the collection and analysis of field duplicates, which provide an assessment of the impact on sample integrity posed by collection, shipment, preparation, and analysis. Field duplicates will be collected at a rate of 1 for every 10 normal samples (10%).

Variability will be assessed through the collection and analysis of field duplicate sample pairs. The two samples will be analyzed for identical contaminants, and will be submitted to the laboratory "blind." The sample locations proposed for the collection of field duplicates will be selected randomly during each sampling event. An assessment of the RPD between the results of each COC will be made to check if variability is within limits set by the DQIs.

10.2 Laboratory QC Samples

LCSs will be generated, analyzed, and reported in accordance with the requirements specified in the laboratory-specific QAMP. MS/MSDs are scheduled for collection for each monitoring event at a rate of 1 for every 20 normal samples (5 percent). MS/MSD samples may require double the normal sample volume. All air samples will be associated with the applicable MS pair for each analytical batch of 20 samples. Batch QC samples will also include method blanks, control samples, and calibration samples for each analytical method.

DRAFT

11.0 FIELD VARIANCES

Based on our knowledge of the Sites, it is unlikely that field conditions will be significantly different than anticipated. However, it may be necessary to implement some minor modifications to the sampling activities described in this SAP such as utilizing different sampling methods (disposable bailers versus peristaltic pumps).

Recommendations for significant SAP modifications (if any) will be based on the observations, judgment, and experience of our Field Supervisors, Project Manager, and Technical Manager following consultation with the DTSC, analytical laboratory, and others, as appropriate.

Our Project Manager will contact the DTSC as soon as practical to communicate significant unanticipated field conditions and significant problems or inconsistencies with this SAP that would potentially require modification of the proposed activities. Verbal approval of significant SAP modifications will be obtained from the DTSC prior to implementing changes. Our summary report following monitoring events will document SAP modifications and the factors/rationale that made them necessary.

DRAFT

12.0 HEALTH AND SAFETY PROCEDURES

Our field personnel have completed Occupational Safety and Health Administration (OSHA) –approved 40-hour health and safety (Hazardous Waste Operations and Emergency Response) training course and appropriate 8-hour annual refresher courses. Field supervisory and sampling personnel will read and understand the air monitoring program and sampling procedures described in this SAP and the health/safety requirements and procedures for this project that are documented in the site-specific HSP in Appendix E.

Our field personnel will acknowledge familiarity with, and understanding of, the elements of the HSP by signing the final page of the HSP prior to site work. Our Project Manager and Field Supervisors will conduct an onsite meeting prior to the start of field activities to communicate project roles and responsibilities, discuss key elements of the HSP, and coordinate activities. A copy of the HSP will be maintained at the Sites by supervisory field personnel for the duration of the field operations and will be available to affected personnel.

The risk of significant exposure to contaminants is considered to be low to moderate while performing tasks required during air monitoring. Sampling methods and work practices to be employed will reduce the potential for significant exposure to potential contaminants. On that basis, it is anticipated that Level D protection will be appropriate for field activities. Level D PPE includes hard hats, safety boots, and safety glasses as appropriate. Samplers will wear appropriate disposable gloves. If field conditions warrant upgrading to a higher protection level, all work will cease and the health and safety officer will be notified.

DRAFT

13.0 REPORT PREPARATION

Following receipt and review of laboratory analytical reports, we will prepare a report documenting the results of air monitoring. At a minimum, the report will include:

- Meteorological conditions.
- Site and adjacent property descriptions.
- Site location map and a site plan that depicts sample locations.
- Summary of the field investigation and sampling procedures implemented. A copy of the field logbook will be included in an appendix.
- Qualitative summary of conditions observed.
- Summary of and rationale for variances to this SAP, if any.
- Tabulated analytical results. Laboratory reports will be included in an appendix.
- QA/QC procedures that were implemented for field and laboratory work and an evaluation whether project DQOs were satisfied.

DRAFT

14.0 ANTICIPATED SCHEDULE

The anticipated schedule for the SAP is summarized below:

- Geocon submits Draft SAP to DTSC: September 1, 2016
- DTSC review of Draft SAP: September 12, 2016
- Geocon submits Final SAP to DTSC: September 14, 2016
- DTSC approval of Final SAP: September 16, 2016
- Geocon conducts SAP field work at SMM: September 19-22, 2016
- Geocon conducts SAP field work at SARTI: September 26-29, 2016
- Geocon conducts SAP field work at SARB: October 3-6, 2016
- Geocon submits Draft Summary Report for SMM, SARTI, and SARB: November 1, 2016
- DTSC review of Draft Summary Report: November 11, 2016
- Geocon submits revised Summary Report to DTSC: November 18, 2016
- DTSC determination on Summary Report: November 25, 2016

DRAFT

15.0 REFERENCES

California Department of Conservation, California Geological Survey, Gutierrez, Carlos et al., *Geologic Map of California*. 2010.

California Department of Conservation, Division of Oil, Gas, and Geothermal Resources, *Draft-Fields: Corning, Greenwood, Kirkwood, Orland, Rancho Capay, Red Bank Creek, Rice Creek, South Corning Gas Fields*. March 9, 2006.

California Department of Toxic Substances Control, "Arsenic Strategies – Determination of Arsenic Remediation – Development of Arsenic Cleanup Goals," January 16, 2009.

California Department of Toxic Substances Control, Office of Human and Ecological Risk, "Human Health Risk Assessment Note 3," June 9, 2011.

California Department of Toxic Substances Control, Office of Human and Ecological Risk, "Human Health Risk Assessment Note 4," July 14, 2014.

California Department of Toxic Substances Control, *Interim Guidance, Evaluation of School Sites with Potential Soil Contamination as a Result of Lead from Lead-Based Paint, Organochlorine Pesticides from Termiticides, and Polychlorinated Biphenyls from Electrical Transformers*, June 9, 2006.

California Department of Toxic Substances Control, *Final Report – Background Metals at Los Angeles Unified School Sites - Arsenic*, dated June 6, 2005.

California Department of Toxic Substances Control, *Interim Guidance for Sampling Agricultural Properties (Third Revision)*, dated August 7, 2008.

California Department of Toxic Substances Control, *Preliminary Endangerment Assessment Guidance Manual*, January 1994 (Final – revised October 2015).

California Department of Water Resources, *Geology of the Northern Sacramento Valley, California*, California Groundwater Bulletin 118, updated September 22, 2014a.

California Department of Water Resources, *Northern Sacramento Valley Groundwater Elevation Map – Spring 2014*, May 2014b.

California Environmental Protection Agency, Department of Toxic Substances Control, Los Angeles Regional Water Quality Control Board, and San Francisco Regional Water Quality Control Board, 2015a. *Advisory — Active Soil Gas Investigations*. Updated July 2015.

California Environmental Protection Agency and Department of Toxic Substances Control, Los Angeles Regional Water Quality Control Board, and San Francisco Regional Water Quality Control Board, 2015b, *Frequently Asked Questions – Advisory – Active Soil Gas Investigations (ASGI)*. Updated August 2015.

California Geological Survey (with the Unites States Geological Survey), Van Gosen, Bradley S., and Clinkenbeard, John P., *Reported Historic Asbestos Mines, Historic Asbestos Prospects, and Other Natural Occurrences of Asbestos in California*, 2011.

DRAFT

Corning Union High School District, *Master Plan for the Development and Sustainability of the Rodgers Ranch – 2015-2035*, June 18, 2015

Duverge, Dylan Jacques., *Establishing Background Arsenic in Soil of the Urbanized San Francisco Bay Region*, December 2011.

Helley, Edward J. and Harwood, David S., *Geologic Map of Late Cenozoic Deposits of the Sacramento Valley and Northern Sierran Foothills, California*, 1985

Interstate Technology and Regulatory Council, *Incremental Sampling Methodology*, February 2012.

Martinez, Lyle, *An Independent Survey of the Daniel Rodgers Estate Property with Reference to Its Use as an Educational Farm Facility – Inventory 2005*, 2005.

United States Environmental Protection Agency, *Data Quality Objectives Process for Hazardous Waste Site Investigations – EPA QA/G-4HW*, Office of Environmental Information, (EPA/600/R-00/007), January 2007.

United States Environmental Protection Agency, *Field Sampling Plan Guidance and Template Version 1, Brownfields Projects R9QA/009.1*, October 2009.

United States Environmental Protection Agency, *Guidance for Quality Assurance Project Plans – QA/G-5*, Office of Environmental Information, EPA/240/R-02/009, December 2002.

United States Environmental Protection Agency, *Guidance for the Data Quality Objective Process – EPA QA/G-4*, Office of Research and Development, EPA/600/R-96/055, September, 1994.

United States Environmental Protection Agency, *Map of Radon Zones* (http://www.epa.gov/radon/pdfs/zonemapcolor.pdf)

United States Environmental Protection Agency, *Quality Assurance Guidance for Conducting Brownfields Site Assessments*, Office of Solid Waste and Emergency Response, EPA 540-R-98-038, September, 1998.

United States Environmental Protection Agency, Regional Screening Levels (RSL) for Chemical Contaminants at Superfund Sites, On-line address: http://www.epa.gov/region9/superfund/prg/index.html, November 2015.

United States Environmental Protection Agency, *Sampling and Analysis Plan Guidance and Template*, Version 3, Brownfields Assessment Projects, R9QA/008.1, August 8, 2012.

DRAFT

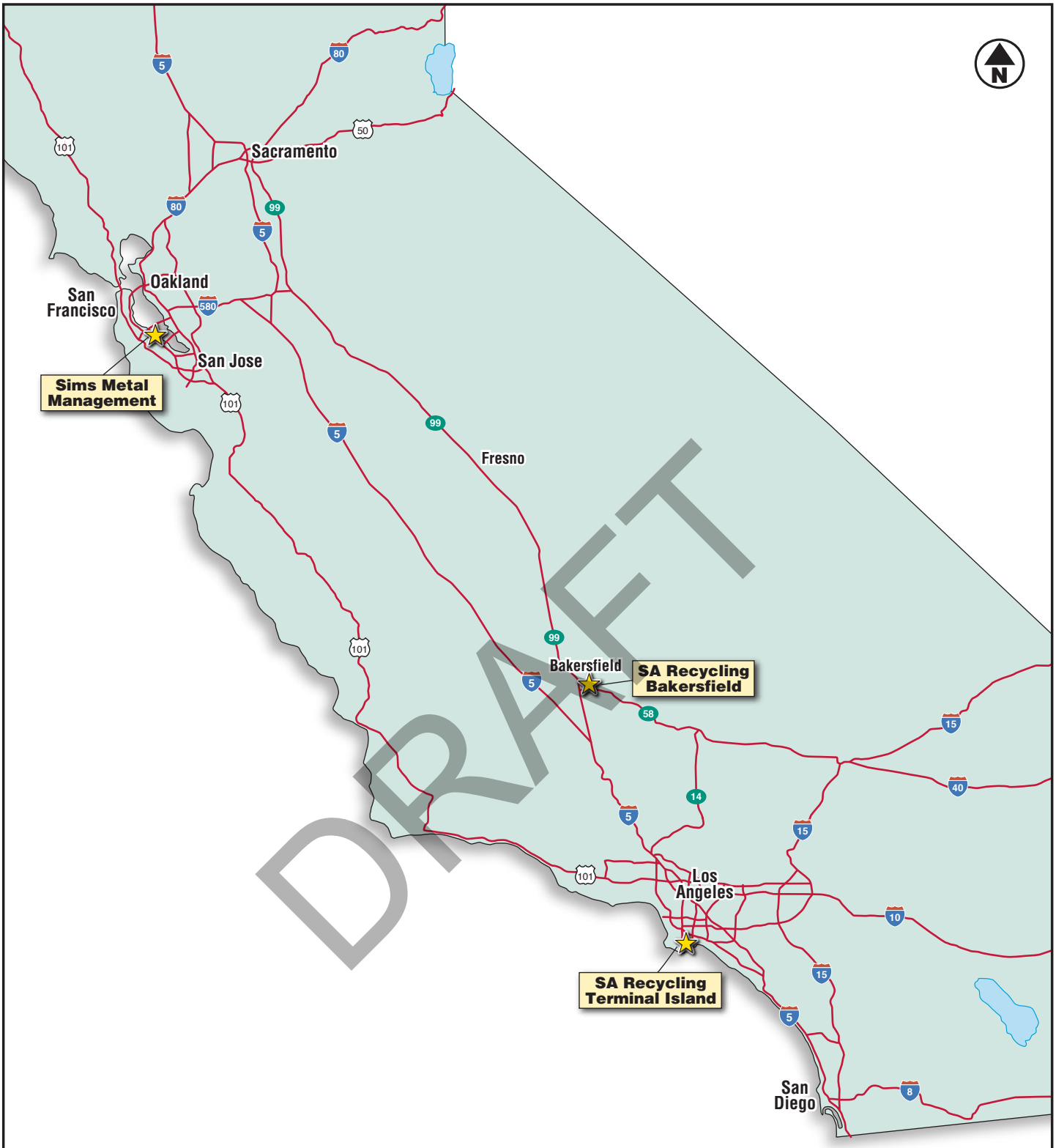

0 100

Scale in Miles

GEOCON CONSULTANTS, INC.
3160 GOLD VALLEY DR – SUITE 800 – RANCHO CORDOVA, CA 95742
PHONE 916.852.9118 – FAX 916.852.9132

Various Facilities Generating and/or Receiving Metal Shredding Waste Statewide

Multiple Locations, California

Project Location Map

S9850-03-21	September 2016	Figure 1

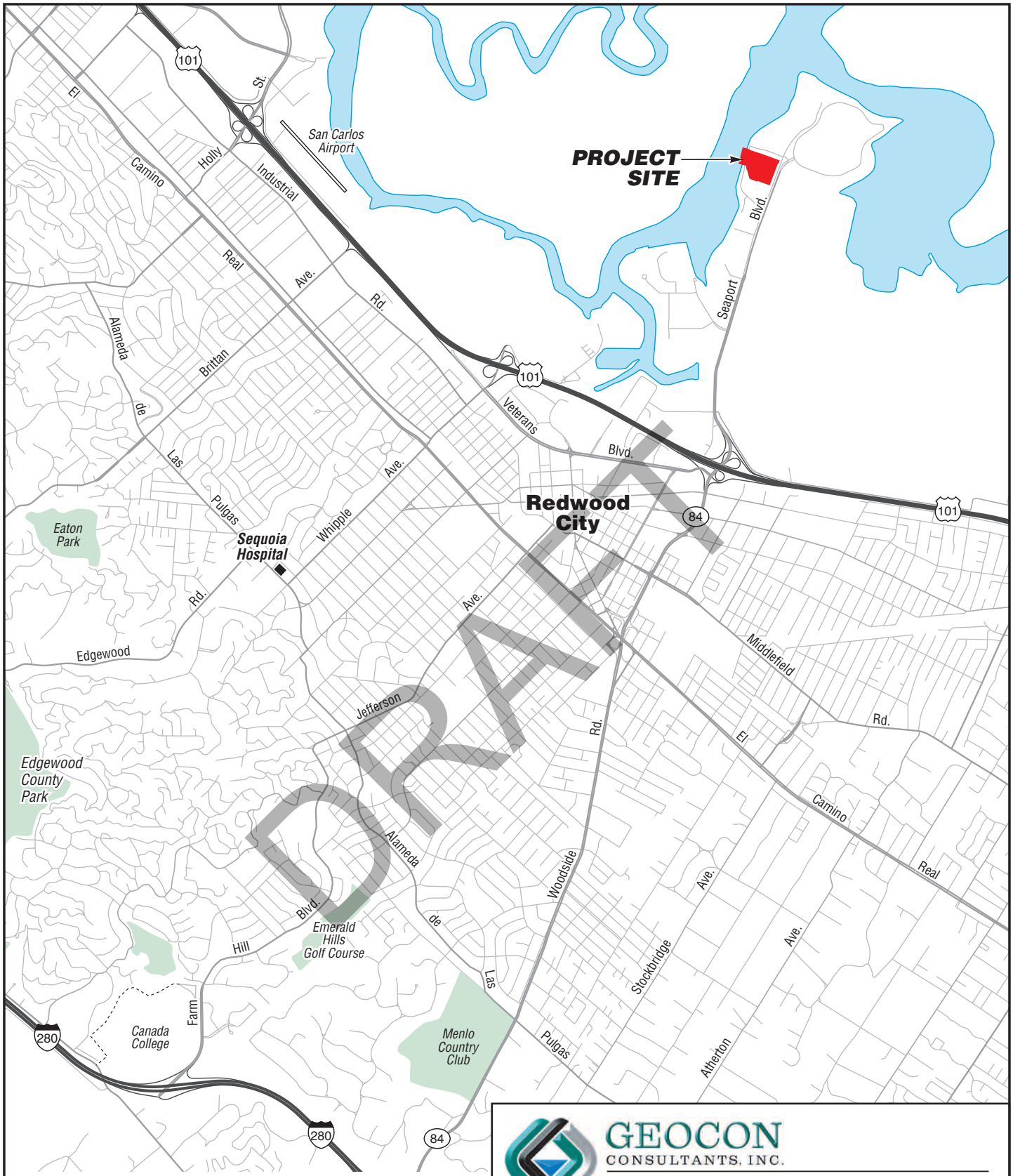

N

0 1

Scale in Miles

GEOCON CONSULTANTS, INC.
3160 GOLD VALLEY DR – SUITE 800 – RANCHO CORDOVA, CA 95742
PHONE 916.852.9118 – FAX 916.852.9132

Various Facilities Generating and/or Receiving Metal Shredding Waste Statewide

Multiple Locations, California

Vicinity Map – Sims Metal Management

S9850-03-21	September 2016	Figure 2

LEGEND:

Approximate Site Boundary

SMM1 Proposed Air Sampling Location

0 200
Scale in Feet

GEOCON CONSULTANTS, INC.
3160 GOLD VALLEY DR – SUITE 800 – RANCHO CORDOVA, CA 95742
PHONE 916.852.9118 – FAX 916.852.9132

Various Facilities Generating and/or Receiving Metal Shredding Waste Statewide

Multiple Locations, California

Site Plan – Sims Metal Management

S9850-03-21	September 2016	Figure 3

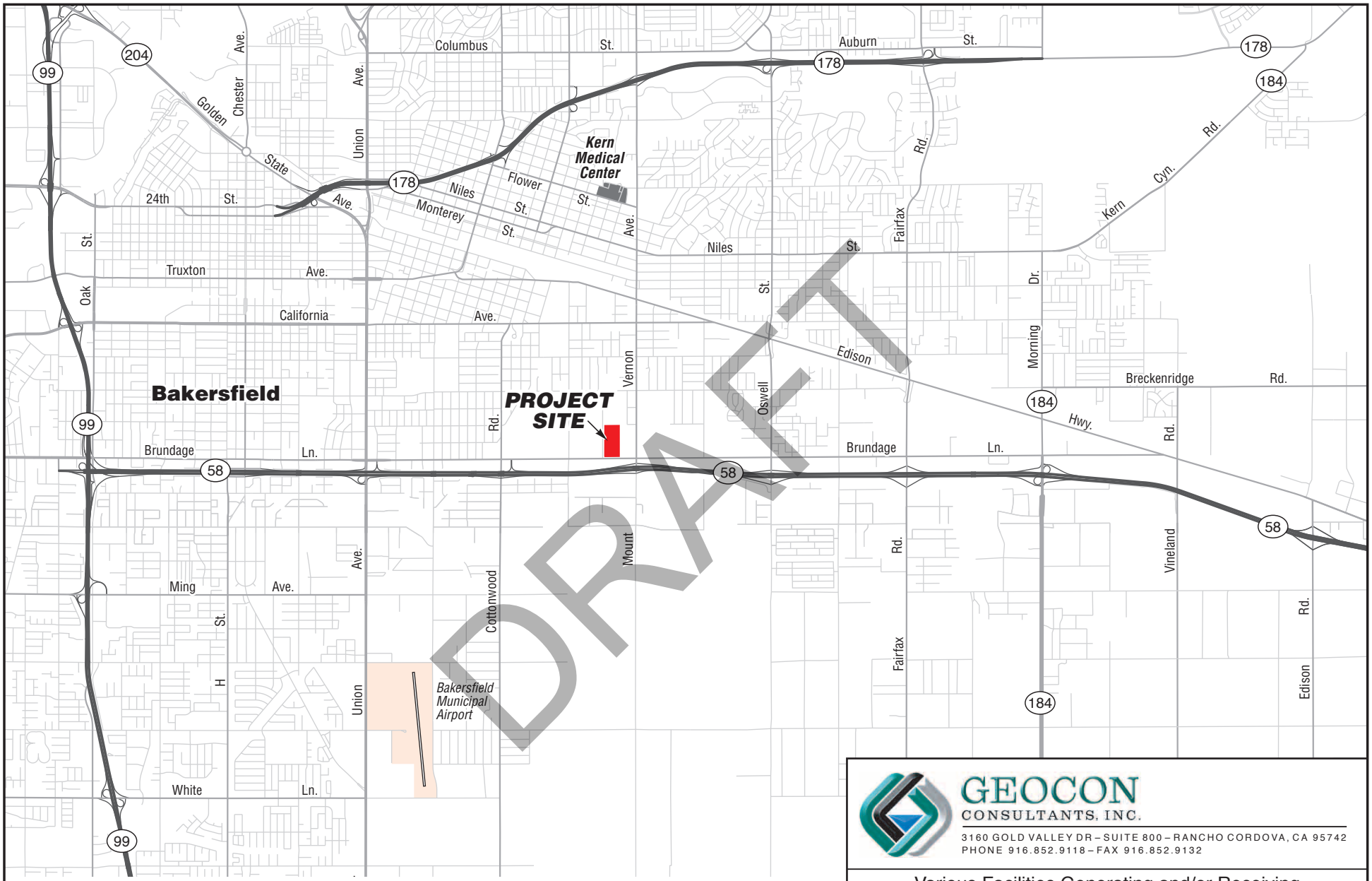

0 1
Scale in Miles

GEOCON CONSULTANTS, INC.
3160 GOLD VALLEY DR – SUITE 800 – RANCHO CORDOVA, CA 95742
PHONE 916.852.9118 – FAX 916.852.9132

Various Facilities Generating and/or Receiving Metal Shredding Waste Statewide

Multiple Locations, California

Vicinity Map – SA Recycling Bakersfield

S9850-03-21	September 2016	Figure 4

LEGEND:

Approximate Site Boundary

SARB1 Proposed Air Sampling Location

0 250
Scale in Feet

GEOCON CONSULTANTS, INC.
3160 GOLD VALLEY DR – SUITE 800 – RANCHO CORDOVA, CA 95742
PHONE 916.852.9118 – FAX 916.852.9132

Various Facilities Generating and/or Receiving Metal Shredding Waste Statewide

Multiple Locations, California

Site Plan – SA Recycling Bakersfield

S9850-03-21	September 2016	Figure 5

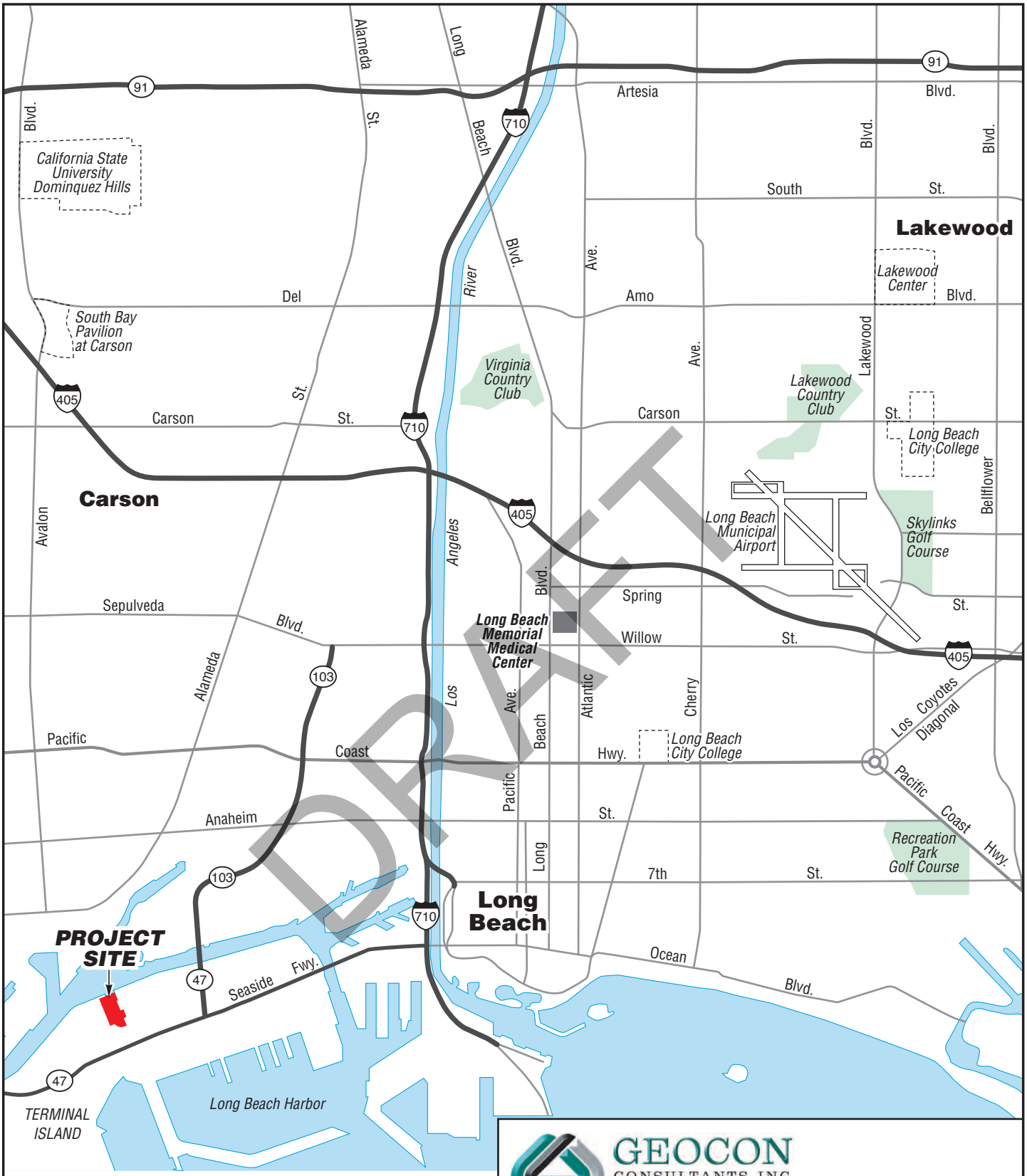

GEOCON CONSULTANTS, INC.
3160 GOLD VALLEY DR – SUITE 800 – RANCHO CORDOVA, CA 95742
PHONE 916.852.9118 – FAX 916.852.9132

N

0 1 2
Scale in Miles

Various Facilities Generating and/or Receiving Metal Shredding Waste Statewide

Multiple Locations, California

Vicinity Map – SA Recycling Terminal Island

S9850-03-21	September 2016	Figure 6

LEGEND:

Approximate Site Boundary

SARTI1 Proposed Air Sampling Location

0 300

Scale in Feet

GEOCON CONSULTANTS, INC.
3160 GOLD VALLEY DR – SUITE 800 – RANCHO CORDOVA, CA 95742
PHONE 916.852.9118 – FAX 916.852.9132

Various Facilities Generating and/or Receiving Metal Shredding Waste Statewide

Multiple Locations, California

Site Plan – SA Recycling Terminal Island

S9850-03-21	September 2016	Figure 7

TABLE 1
SUMMARY OF DATA QUALITY OBJECTIVES
VARIOUS METAL SHREDDING FACLITIES STATEWIDE
MULTIPLE LOCATIONS, CALIFORNIA
CONTRACT NO. 15-T4124

Step 1 **State the Problem and Project Tasks**	**Stakeholders:** The DTSC. **Problem:** To provide credible data that can be used to characterize the risks and hazards associated with off-site migration of air emissions impacted by metals, asbestos, and toxic organic compounds (i.e., the COPCs) resulting from metal shredding and/or the handling of metal shredding waste. **Tasks:** Collect TSP, PM10, PM2.5, metals (aluminum, antimony, arsenic, barium, beryllium, cadmium, calcium, chromium, cobalt, copper, iron, lead, manganese, molybdenum, nickel, selenium, silver, tin, vanadium, and zinc;) , asbestos, and toxic organic species (including benzene, chloromethane, 1,1-dichloroethene, ethylbenzene, 4-ethyltoluene, dichlorodifluoromethane (aka freon 12), trichlorofluoromethane, (aka freon 11), 1,2,4-trimethylbenzene, toluene, 1,3,5-trimethylbenzene, xylenes, vinyl chloride, poly chlorinated biphenyls (PCB), and formaldehyde) from preselected upwind, downwind, and cross wind locations samples at pre-selected locations (Figures 3, 4, and 5) at three selected metal shredding facilities, analyze the samples for the COPCs, and report the results.
Step 2 **Identify the Goal of the Study**	**Questions to Resolve and Potential Actions to Take:** Is air at the metal shredding facilities impacted by COPCs at concentrations that could potentially be detrimental to human health and/or the environment? If so, recommendations for additional investigation and/or remediation will be made, as appropriate.
Step 3 **Identify Information Inputs**	**Information Inputs:** **1.** Goals and plans for the Facilites **2.** Operational history of the Facilities **3.** Findings of previous investigations associated with the Facilities (if any) **4.** Regulatory agency decisions regarding the Facilities (if any) **5.** Potential environmental and/or human impacts of the Site **6.** Observations and monitoring/screening results during field activities **7.** Analytical results of air samples **8.** Potential exposure scenarios and pathways for receptors of concern **9.** Laboratory QC results and overall project QC evaluations.

DRAFT

TABLE 1
SUMMARY OF DATA QUALITY OBJECTIVES
VARIOUS METAL SHREDDING FACLITIES STATEWIDE
MULTIPLE LOCATIONS, CALIFORNIA
CONTRACT NO. 15-T4124

Step 4 **Define Boundaries of the Study**	**Spatial Boundaries:** Each facility's property boundaries will define the maximum lateral extent of investigation activities with a focus on collecitng samples from the perimeter of the facilities. To assess is activities occuring at the metal shredding facilities are contributing to the COPC impacted air, we will collect samples from upwind, downwind, and cross wind locations at each facility. Additonal spatial considerations will be needed to be in compliance with the sampling placement requirements listed in 40 CFR Appendix E to Part 58 - Probe and Monitoring Path Siting Criteria for Ambient Air Quality Monitoring. As such, sampler inlets are required to be between 2 and 7 meters above ground level, greater than 2 meters away from supporting structures (like walls, parapets, or penthouses, greater than 10 meters from trees, and between 2 and 10 meters from roadways. Furthermore, because each of these sampling locations will have multiple collocated sampling devices present, the sampler inlets for any high volume samples (>200 liters per minute) must be at least 2 meters apart and the sampling inlets for low volume samplers (<200 L/min) will be spaced at least 1 meter apart, they must be spaced no greater than 4 meters apart, and the inlets should be within 1 meter of each of the vertically. **Temporal Boundaries:** The temporal limits of the field activities are defined by contractual budgeted resources for the proposed investigation, which includes up to three separate 24-hour sampling durations at each of the three metals shredding facilities.
Step 5 **Develop the Analytic Approach**	High volume TSP equipment will sample an 8-in by 10-in quartz fiber filter which will be analyzed off-site for TSP and selected metals. Low volume PM10 equipment will sample 47-mm Teflon filter which will be analyzed off-site for PM10 and selected metals. Low volume PM2.5 equipment will sample 47-mm Teflon filter which will be analyzed off-site for PM2.5 and selected metals. Low volume air sampling equipment will be used to sample onto 25-mm diameter mixed cellulose ester fiber filters which will be analysed offsite for asbestos. Low volume air sampling equipment will be used to sample onto Florisil tube with Swinnex pre-filter which will be analysed offsite for PCBs. Low volume air sampling equipment will be used to sample onto a cartridge containing silica gel coated with 2-4-dinitrophenylhydrazine which will be analysed offsite for formaldehyde. 6-Liter Summa canisters will be used to sample ambient air and will be analysed offsite for selected toxics organic species.
Step 6 **Specify Performance or Acceptance Criteria**	Acceptance of the chemical analytical results will be based on verification and validation criteria specified in the data quality indicators in Table 2.

DRAFT

TABLE 1
SUMMARY OF DATA QUALITY OBJECTIVES
VARIOUS METAL SHREDDING FACLITIES STATEWIDE
MULTIPLE LOCATIONS, CALIFORNIA
CONTRACT NO. 15-T4124

Step 7 **Develop the Detailed Plan for Obtaining Data**	**Basic Data Collection Design:** Collection and analysis of air quality samples at the facilities is in accordance with USEPA's *40 CFR Part 50, Appendix B to Part 50 Reference Method for the Determination of Suspended Particulate Matter in the Atmosphere, 40 CFR Part 50, Appendix J to Part 50 Reference Method for the Determination of Particulate Matter as* PM_{10} *in the Atmosphere*, and *40 CFR Part 50, Appendix L to Part 50 Reference Method for the Determination of Particulate Matter as* $PM_{2.5}$ *in the Atmosphere* and will evaluate the air along the perimeter of the facilities for potential impact by the COPCs. Data collection is designed to characterize air upwind, corsswind and downwind of the current metal shredding facilities to provide data useful to evaluate potential impacts and manage risk associated with the Site (if any). **Design Flexibility:** If concentrations of COPCs reported in soil, sediment, groundwater and soil vapor samples exceed respective screening levels, then additional investigation or appropriate remediation measures may be recommended DTSC to characterize the distribution and/or limits of potentially hazardous substances so that appropriate mitigation measures can be developed (if any).

Notes:

COPCs = Chemicals of potential concern

DTSC = Department of Toxic Substances Control

USEPA = U.S. Environmental Protection Agency

TSP = Total suspended particulates

PM10 = Particulate matter > 10 µg

PM2.5 = Particulate matter > 2.5 µg

µg = micrograms

TOS = Toxic organic species

DRAFT

TABLE 2
DATA QUALITY INDICATORS
VARIOUS METAL SHREDDING FACLITIES STATEWIDE
MULTIPLE LOCATIONS, CALIFORNIA
CONTRACT NO. 15-T4124

INDICATOR	MEANS OF ASSESSMENT	QUALITY CONTROL ELEMENT(S) ASSESSED	ACCEPTANCE CRITERIA
Precision	RPD	Field and lab duplicate samples; MS/MSD samples	Field: 30% RPD Lab: 20% RPD; 30% RPD
Accuracy	%R	Field; MS/MSD samples; laboratory control samples	60 to 140 %R 70 to 130 %R
Completeness	Percent of complete data	Analytical data reports by method and event	> 95%
Representativeness	Overview of investigation data	Analytical data reports; all applicable elements	Lateral and vertical extent of COCs defined by data gathered
Comparability			Trend analysis

Notes:
RPD - relative percent difference
MS/MSD - matrix spike/matrix spike duplicate
%R - percent recovery

DRAFT

TABLE 3
SAMPLING FREQUENCY AND ANALYSIS
VARIOUS METAL SHREDDING FACLITIES STATEWIDE
MULTIPLE LOCATIONS, CALIFORNIA
CONTRACT NO. 15-T4124

SAMPLE IDENTIFICATION	EXPECTED LOCATION RELATIVE TO WIND DIRECTION	TOTAL SAMPLING EVENTS	SAMPLING DURATION PER SAMPLING EVENT	TSP	PM10	PM2.5	TSP METALS	PM10 METALS	PM2.5 METALS	ASBESTOS	TOS
SMM1	Upwind	3	24 Hours	●	●	●	●	●	●	●	●
SMM2	Downwind	3	24 Hours	●	●	●	●	●	●	●	●
SMM3	Down/Crosswind	3	24 Hours	●	●	●	●	●	●	●	●
SMM4	Crosswind	3	24 Hours	●	●	●	●	●	●	●	●
SARB1	Upwind	3	24 Hours	●	●	●	●	●	●	●	●
SARB2	Downwind	3	24 Hours	●	●	●	●	●	●	●	●
SARB3	Crosswind	3	24 Hours	●	●	●	●	●	●	●	●
SARB4	Crosswind	3	24 Hours	●	●	●	●	●	●	●	●
SARTI1	Upwind	3	24 Hours	●	●	●	●	●	●	●	●
SARTI2	Downwind	3	24 Hours	●	●	●	●	●	●	●	●
SARTI3	Crosswind	3	24 Hours	●	●	●	●	●	●	●	●
SARTI4	Crosswind	3	24 Hours	●	●	●	●	●	●	●	●

Notes:
TSP = Total suspended particulates
PM10 = Particulate matter > 10 µg
PM2.5 = Particulate matter > 2.5 µg
µg = micrograms
TOS = Toxic organic species

DRAFT

TABLE 4
SAMPLE CONTAINER, PRESERVATION, AND HOLDING TIME REQUIREMENTS
VARIOUS METAL SHREDDING FACLITIES STATEWIDE
MULTIPLE LOCATIONS, CALIFORNIA
CONTRACT NO. 15-T4124

ANALYTES	ANALYTICAL METHOD	SAMPLE CONTAINERS	PRESERVATION	HOLDING TIME
TSP	Gravimeteric methods listed in Title 40 CFR Part 50 Appendix B	One 8-inch by 10-inch quartz filter	None	6 Months
PM10	Gravimeteric methods listed in Title 40 CFR Part 50 Appendix J	One 47-millimeter PTFE Teflon filter with support ring	Cool 4°C (+/- 2°C)	30 Days
PM2.5	Gravimeteric methods listed in Title 40 CFR Part 50 Appendix L	One 47-millimeter PTFE Teflon filter with support ring	Cool 4°C (+/- 2°C)	30 Days
Aluminum, antimony, arsenic, barium, beryllium, cadmium, calcium, chromium, cobalt, copper, iron, lead, manganese, molybdenum, nickel, selenium, silver, tin, vanadium, and zinc	EPA IO3.3	One 8-inch by 10-inch quartz filter	None	6 Months
Aluminum, antimony, arsenic, barium, beryllium, cadmium, calcium, chromium, cobalt, copper, iron, lead, manganese, molybdenum, nickel, selenium, silver, tin, vanadium, and zinc	EPA IO3.3	One 47-millimeter PTFE Teflon filter with support ring	Cool 4°C (+/- 2°C)	30 Days
Beryllium	Title 40 CFR Part 50 Appendix G	One 8-inch by 10-inch quartz filter	None	6 Months
Beryllium	Title 40 CFR Part 50 Appendix G	One 47-millimeter PTFE Teflon filter with support ring	Cool 4°C (+/- 2°C)	30 Days

DRAFT

TABLE 4
SAMPLE CONTAINER, PRESERVATION, AND HOLDING TIME REQUIREMENTS
VARIOUS METAL SHREDDING FACLITIES STATEWIDE
MULTIPLE LOCATIONS, CALIFORNIA
CONTRACT NO. 15-T4124

ANALYTES	ANALYTICAL METHOD	SAMPLE CONTAINERS	PRESERVATION	HOLDING TIME
Asbestos	NIOSH Method 7402 using TEM	25-millimeter mixed cellulose ester fiber filter		
Benzene, chloromethane, 1,1-dichloroethene, ethylbenzene, 4-ethyltoluene, dichlorodifluoromethane, trichlorofluoromethane, 1,2,4-trimethylbenzene, toluene, 1,3,5-trimethylbenzene, xylenes, vinyl chloride	EPA Method TO-15	One 6-Liter Summa canister	None	30 Days
PCBs	NIOSH 5503 Modified	Florisil tube with Swinnex pre-filter		
Formaldehyde	NIOSH 2016	Cartridge containing silica gel coated with 2-4-dinitrophenylhydrazine	Cool 4°C (+/- 2°C)	

Notes:
PCBs = poly chlorinated biphenyls
°C – degrees Celsius
EPA – United States Environmental Protection Agency
NIOSH = National Institute for Occupational Safety and Health
CFR = Code of Federal Regulations

DRAFT

TABLE 5
SUMMARY OF LABORATORY REPORTING LIMITS
VARIOUS METAL SHREDDING FACLITIES STATEWIDE
MULTIPLE LOCATIONS, CALIFORNIA
CONTRACT NO. 15-T4124

Chemical of Concern	Reporting Limits (mass per filter in µg)	Reporting Limits (concentration in µg/m^3)*	Reporting Limits (concentration in µg/tube)
EPA Method IO 3.3			
Aluminum	0.09	0.00376506	N/A
Antimony	0.123	0.005145582	N/A
Arsenic	0.019	0.000794846	N/A
Barium	0.949	0.039700469	N/A
Cadmium	0.088	0.003681392	N/A
Calcium	0.022	0.000920348	N/A
Chromium	0.011	0.000460174	N/A
Cobalt	0.01	0.00041834	N/A
Copper	0.01	0.00041834	N/A
Iron	0.014	0.000585676	N/A
Lead	0.045	0.00188253	N/A
Manganese	0.018	0.000753012	N/A
Molybdenum	0.04	0.00167336	N/A
Nickel	0.01	0.00041834	N/A
Selenium	0.016	0.000669344	N/A
Silver	0.086	0.003597724	N/A
Tin	0.154	0.006442436	N/A
Vanadium	0.011	0.000460174	N/A
Zinc	0.011	0.000460174	N/A
Title 40 CFR Part 50 Appendix G			
Beryllium	0.5	0.020917001	N/A
NIOSH Method 7402 using TEM			
Asbestos	N/A	none	N/A
USEPA TO-15			
Benzene	N/A	0.5	N/A
Chloromethane	N/A	0.5	N/A
1,1-Dichloroethene	N/A	0.5	N/A
Ethylbenzene	N/A	0.5	N/A
4-Ethyltoluene	N/A	0.5	N/A
Dichlorodifluoromethane	N/A	0.5	N/A
Trichlorofluoromethane	N/A	0.5	N/A
1,2,4-Trimethylbenzene	N/A	0.5	N/A
Toluene	N/A	0.5	N/A
1,3,5-Trimethylbenzene	N/A	0.5	N/A
Xylenes	N/A	0.5	N/A
Vinyl Chloride	N/A	0.5	N/A
NIOSH 5503 Modified			
PCBs	N/A	N/A	0.000025
NIOSH 2016			
Formaldehyde	N/A	N/A	0.05

Notes:
PCBs = poly chlorinated biphenyls
N/A = Not applicable
µg = micrograms
µg/m^3 = micrograms per cubic meter
µg/tube = micrograms per tube

DRAFT

APPENDIX A

DRAFT

APPENDIX B

DRAFT

APPENDIX C

DRAFT

OPERATIONS MANUAL

TE-5170V Volumetric Flow Controlled
Total Suspended Particulate
High Volume Air Sampler

DRAFT

Tisch Environmental, Inc.
145 South Miami Avenue
Village of Cleves, Ohio 45002

Toll Free: (877) 263 -7610 (TSP-AND-PM10)
Direct: (513) 467-9000
FAX: (513) 467-9009

sales@tisch-env.com
www.tisch-env.com

TE-5170V Volumetric Flow Controlled
Total Suspended Particulate High Volume Air Sampler

Welcome

We are the experts in high volume air sampling, lead sampling, lead samplers, particulate monitoring, particulate emissions, pesticide monitoring, pesticide sampling, total suspended particles, particulate sampler, Federal Reference Method PM-10, Federal Reference Method PM2.5, EPA Method TO-4A, EPA Method TO-9A, EPA Method TO-13A. TEI is a family business located in the Village of Cleves, Ohio. TEI employs skilled personnel who average over 20 years of experience each in the design, manufacture, and support of air pollution monitoring equipment. Our modern well-equipped factory, quality philosophy and experience have made TEI the supplier of choice for air pollution monitoring equipment. Now working on the fourth generation, TEI has state-of-the-art manufacturing capability and is looking into the future needs of today's environmental professionals.

Assistance

If you encounter problems or require detailed explanations, do not hesitate to contact Tisch Environmental offices by e-mail or phone.

Toll Free: (877) 263 -7610 (TSP AND-PM10)
Direct: (513) 467-9000
FAX: (513) 467-9009

sales@tisch-env.com
www.tisch-env.com

DRAFT

Table of Contents

Welcome ____ 3

Assistance ____ 3

Introduction ____ *6*

EPA Standards ____ 6

Safety Precautions ____ 6

Important Safety Instructions ____ 6

Electrical Installation ____ 7

Do Not Abuse Cords ____ 7

Extension Cords ____ 7

Product Description ____ *8*

Introduction ____ 8

Applications ____ 8

Calibration Requirements ____ 8

Calibration Kits ____ 9

Parts ____ 10

Assembly ____ *12*

Gabled Roof Assembly ____ 13

Electrical Set-Up ____ 15

Operations ____ *16*

Calibration Procedure ____ 16

Example Calculations ____ 22

Sampler Operation ____ 28

Timer Preparation ____ 29

TE-5007 7-Day Mechanical Timer ____ 29

Troubleshooting ____ *30*

Maintenance and Care ____ *32*

Motor Brush Replacement ____ *33*

Warranty ____ *36*

DRAFT

Assembly Drawings _____ *37*

TE-5070 Blower Motor Assembly with VFC Device _____ **37**

TE-5003V Filter Holder Assembly _____ **38**

Calibration Worksheets _____ *39*

Calibration Certificate _____ *41*

DRAFT

Introduction

EPA Standards

The following manual will instruct you in the unpacking, assembly, operation, calibration, and use of this product. For information on air sampling principles, procedures and requirements and to ensure compliance with government regulations, refer to Title 40 of the Code of Federal Regulations and consult **Appendix B to Part 50**, **Reference Method for Determination of Suspended Particulate Matter in the Atmosphere (High Volume Method)** or **Appendix G to Part 50**, **Reference Method for the Determination of Lead in Suspended Particulate Matter Collected from Ambient Air**. For additional information, contact the local Environmental Protection Agency office serving your area.

Safety Precautions

Before using Tisch Environmental products, always review the corresponding operations manuals and take all necessary safety precautions, especially when working with electricity.

Important Safety Instructions

Read and understand all instructions. Do not dispose of these instructions. Failure to follow all instruction listed in this manual may result in electric shock, fire, and/or personal injury. When using an electrical device, basic precautions must always be followed, including the precautions listed in the safety section of this manual. Never operate this unit in the presence of flammable materials or vapors are present as electrical devices may produce arcs or sparks that can cause fire or explosions. Always disconnect power supply before attempting to service or remove any components. Never immerse electrical parts in water or any other liquid. Always avoid body contact with grounded surfaces when plugging or unplugging this device is wet or dangerous conditions.

DRAFT

Electrical Installation

Installation must be carried out by specialized personal only, and must adhere to all local safety rules. This unit can be used for different power supply versions; before connecting this unit to the power line, always check if the voltage shown on the serial number tag corresponds to the one on your power supply. This product does use grounded plugs and wires. Grounding provides the path of least resistance for electrical currents, thereby reducing the risk of electric shock to users. This system is equipped with electrical cords with internal ground wires and a grounding plug. The plug must be plugged into a matching outlet that is properly installed and grounded in accordance with all local codes and ordinances. Do not modify the plug provided. If plug will not fit outlet, have the proper corresponding outlet installed by a professional, qualified electrician.

Do Not Abuse Cords

In the event that any electrical component of this system needs to be transported, **DO NOT** carry the unit by its power cord or unplug the unit by yanking the cord from the outlet. **Pull the plugs, not the cords**, to reduce risk of damage to unit. Keep all cords away from heat, oil, sharp objects, and moving parts.

Extension Cords

It is always advisable to use the shortest extension cord possible. Grounded units require a three-wire extension cord. As the distance from the supply outlet increases, you must use a heavier gauge extension cord. Using extension cords with inadequately sized wires results in serious changes in voltage, resulting in a loss of power and possible damage to equipment. It is recommended to only use 10-gauge extension cords for this product. Never use cords that exceed one hundred feet. Outdoor extension cords must be marked with the suffix “W-A” (or “W” in Canada)to indicate that it is suitable for outdoor usage. Always ensure that extension cords are properly wired and in good electrical condition. Always replace damaged extension cords immediately, or seek repair from qualified electricians before further use. Remember to protect extension cords from sharp objects, excessive heat, and damp or wet conditions.

DRAFT

Product Description

Introduction

The High Volume Air Sampler (also known as a **lead sampler**) is the recommended instrument for sampling large volumes of air for the collection of TSP (Total Suspended Particulate). The TE-5170V TSP VFC sampler consists of a TE-5001 Anodized aluminum shelter, TE-5070 Aluminum Blower Motor Assembly, TE-5003V 8”x10” Stainless Steel Filter Holder with pressure tap, TE-5009 Continuous flow/pressure recorder, TE-10557 TSP Volumetric Flow Controller, TE-5007 Mechanical Timer, TE-5012 Elapsed Time Indicator, TE-5030 Manometer, TE-10618 male stagnation tube fitting.

Applications

- Ambient air monitoring to determine mass concentration of suspended particulate levels relative to air quality standards. The result is reported in micrograms per cubic meter.

- Impact of a specific source on ambient levels of suspended particulates by incorporating a "wind-direction-activation" modification which permits the sampler to operate only when conditions are such that a source-receptor relationship exists.

Calibration Requirements

TE-5170V TSP VFC High Volume Air Sampler should be calibrated at the site:

- Upon installation
- After routine maintenance
- Once every quarter (three months)
- After 360 sampling hours

DRAFT

Calibration Kits

The TE-5028 is the instrument used to calibrate the TE-5170V VFC TSP High Volume Air Sampler. It simulates change in the resistance by merely rotating the knob on the top of the calibrator. The infinite resolution lets the technician select the desired flow resistance. The TE-5028 calibration kit includes: carrying case, 30" slack tube water manometer, adapter plate, 3' piece of tubing, and TE-5028A orifice with flow calibration certificate. Optional electronic manometer is available.

Each TE-5028A is individually calibrated on a primary standard positive displacement device (Rootsmeter) which is directly traceable to NIST.

**** It is recommended by the EPA that each calibrator should be re-calibrated annually. (1998 Code of Federal Regulations Parts 50 to 51, Appendix B to Part 50, Reference Method for the Determination of Suspended Particulate Matter in the Atmosphere, 9.2.17 page 30.)**

DRAFT

Parts

1. Shelter Box - 48" x 20" x 20" 72 lbs

TSP VFC Sampler
TE-5170V 110volt, 60hz
TE-5170VX 220volt, 50hz
TE-5170VXZ 220volt, 60hz

30" Water Manometer
TE-5030

8" X 10" VFC TSP
Stainless Steel Filter Holder
TE-5003V

TSP Volumetric Flow Controller
TSP
TE-10557TSP

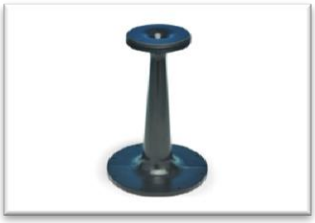

DRAFT

24 Hour Chart Recorder
TE-5009 110volts, 60hz
TE-5009X 220volts, 50hz
TE-5009XZ 220volts, 60hz

7 Day Mechanical Timer
TE-5007 110volt, 60hz
TE-5007X 220volt, 50hz
TE-5007XZ 220volt, 60hz

VFC Blower Motor Assembly
TE-5070 110volt
TE-5070X 220volts

Elapsed Time Indicator
TE-5012 110volt, 60hz
TE-5012X 220volt, 50hz
TE-5012XZ 220volt, 60hz

Male Stagnation Fitting with tubing
TE-10618

Bulk Head Fitting(attached to shelter)
TE-10617

DRAFT

Box of Charts
TE-106

2. Lid Box - 19" x 14" x 14" 9 lbs
Gabled Roof
TE-5001-10

*** Save the shipping containers and packing material for future use.

Assembly

1. Open shelter box and remove Anodized Aluminum Shelter.

2. Taped to the bottom is the TE-5003V TSP VFC filter holder with TE-5005-9 gasket, TE-5030 30" water manometer and male tube fitting.

3. Strapped to the leg is the TE-10557TSP with look up table and the TE-5070 VFC Blower Motor Assembly.

4. Screw TE-5003V Filter Holder onto TE-10557TSP and TE-5070 Blower Motor Assembly (tubing, power cord, and pressure tap on side of filter holder to the right) make sure TE-5005-9 gasket is in place.

5. Lower Filter Holder, VFC, and Blower Motor down through top support pan on shelter.

6. Connect clear tubing from bulkhead fitting to pressure tap on side of filter holder.

7. Connect black tubing from the TE-5070 blower motor to the pressure tap located underneath the TE-5009 recorder

8. Open lid box

DRAFT

Gabled Roof Assembly

The following steps are accompanied by pictures to aid your understanding of gabled roof assembly. **Please be aware that the pictures are standardized and may not match the equipment that you are using.** The gabled roof is used on both TSP and PUF models, and the assembly procedure is the same for both products.

<u>Lid Hardware</u> 5 pcs 10-24 x 1/2 pan head screws 5 pcs 10-24 stop nuts 1 pc 6-32 x 3/8 pan head screw 1 pc 6-32 hex nut 1 pc 20" chain with "S" hook 1 pc TE-5001-10-9 roof back catch 1 pc TE-5001-10-10 front catch 1 pc TE-5001-10-11 rear lid hasp	
<u>Step 1</u> Secure TE-5001-10-10 front catch to the shelter using 2 10-24 pan head screws with stop nuts. **Do not tighten completely, this may need to be adjusted after final assembly**	
<u>Step 2</u> Secure TE-5001-10-9 roof back catch to the back of shelter using #6-32 pan head screw with stop nut.	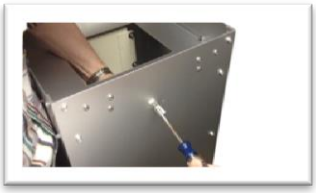
<u>Step 3</u> Secure TE-5001-10-11 rear lid hasp inside the lid with the slot angled up using (2) #10-24 pan head screws with stop nuts. **Do not tighten completely, this may need to be adjusted after final assembly**	

DRAFT

<u>Step 4</u> Remove (4) #10-24 x ½" pan head screws from the rear of the shelter, attach the lid to the shelter by placing the lid hinge plates on the **"OUTSIDE"** of the shelter, line the hinges up with the (4) threaded holes in the back of the shelter. Use the (4) #10-24X ½" pan head screws that were removed preciously to attach the lid hinges to the shelter. **Tighten completely**	
<u>Step 5</u> Adjust the front and rears catch to be sure that the lid slots lowers over it when closing. Tighten the roof back hasp and front catch completely.	
<u>Step 6</u> Attach the chain and "S" hook assembly to the side of the shelter with a #6-32 x 3/8" pan head screw.	
<u>Step 7</u> The Lid can now be secured in an open or closed position with the "S" hook.	

DRAFT

Electrical Set-Up

TE-5170-V Electrical Set-Up

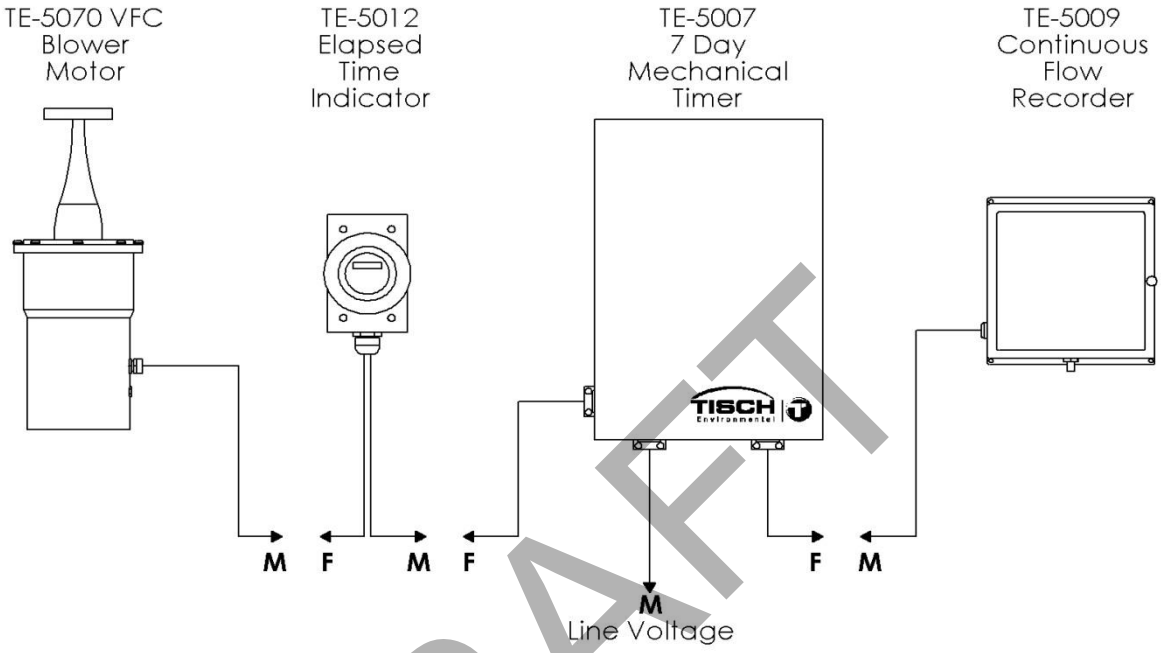

DRAFT

M = 3-Prong Plug (Male)
F = 3-Prong Socket (Female)

Note: Standard 3-prong plug may require adapter for use in global installations. Please consult your local electrical standards.

1. The TE-5070 VFC Blower Motor plug set connects into the TE-5012 Elapsed Time Indicator socket.

2. The plug of the ETI cord set plugs into the TE-5007 7-Day Mechanical Timer timed socket on the left side of timer.

3. The other socket on timer (on the right) is hot all the time and normally gets plugged into TE-5009 recorder.

4. The 3 prong plug of timer connects into the line voltage.

Operations

Calibration Procedure

The following is a step by step process of the calibration of a TE-5170V Volumetric Flow Controlled TSP Particulate Sampling System. Following these steps are example calculations determining the calibration flow rates for the sampler. The air flow through these types of sampling systems is controlled by a Volumetric Flow Controller (VFC) or dimensional venturi device.

This calibration differs from that of a mass flow controlled TSP sampler in that a slope and intercept does not have to be calculated to determine air flows. Also, the calibrator orifice Qactual slope and intercept from the orifice certification worksheet can be used here, unlike a mass flow controlled TSP where Qstandard slope and intercept are used. The flows are converted from actual to standard conditions when the particulate concentrations are calculated. With a Volumetric Flow Controlled (VFC) sampler, the calibration flow rates are provided in a Flow Look Up Table that accompanies each sampler.

The attached example calibration worksheet uses a TE-5028A Variable Orifice Calibrator which uses an adjustable or variable orifice, which we recommend when calibrating a VFC.

Proceed with the following steps to begin the calibration:

Step 1: Mount the calibrator orifice and top loading adapter plate to the sampler. A sampling filter is generally not used during this procedure. Tighten the top loading adapter hold down nuts securely for this procedure to assure that no air leaks are present.

Step 2: Turn on the sampler and allow it to warm up to its normal operating temperature.

Step 3: Conduct a leak test by covering the holes on top of the orifice and pressure tap on the orifice with your hands. Listen for a high-pitched

DRAFT

squealing sound made by escaping air. If this sound is heard, a leak is present and the top loading adapter hold-down nuts need to be re-tightened.

Avoid running the sampler for longer than 30 seconds at a time with the orifice blocked. This will reduce the chance of the motor overheating. Also, never try this leak test procedure with a manometer connected to the pressure tap on the calibration orifice or the pressure tap on the side of the sampler. Liquid from either manometer could be drawn into the system and cause motor damage.

Step 4: Connect one side of a water manometer or other type of flow measurement device to the pressure tap on the side of the orifice with a rubber vacuum tube. Leave the opposite side of the manometer open to the atmosphere.

Step 5: Connect a water manometer to the quick disconnect located on the side of the aluminum outdoor shelter (this quick disconnect is connected to the pressure tap on the side of the filter holder).

Step 6: Make sure the TE-5028A orifice is all the way open (turn the black knob counter clock-wise). Record both manometer readings, the one from the orifice and the other from the side of the sampler. To read a manometer one side goes up and the other side goes down, you add both sides, this is your inches of water. Repeat this process for the other four points by adjusting the knob on the variable orifice (just a slight turn) to four different positions and taking four different readings. You should have five sets of numbers, ten numbers in all.

Step 7: Remove the variable orifice and the top loading adapter and install a clean filter. Set your timer.

Step 8: Record the ambient air temperature, the ambient barometric pressure, the sampler serial number, the orifice serial number, the orifice Qactual slope and intercept with date last certified, todays date, site location and the operators initials.

One example calibration sheet and one blank calibration sheet are attached to this manual. To download the electronic spreadsheet, please visit www.tisch-env.com (download the TE-5170V High Vol TSP VFC with G-

DRAFT

Factor excel spreadsheet). It is highly recommended to download the electronic excel spreadsheet and use spreadsheet features to complete calculations. (If you do not have a G Factor then go to "TE-5170V High Vol. TSP" excel spreadsheet on web site and then go to page 20)

G-Factor Excel Spreadsheet Instructions

The TE-5170V calibration worksheet can be found on our website at www.tisch-env.com. If you have the G Factor that accompanies each VFC, go to "TE-5170V High Vol. TSP VFC with G-Factor", if you do not have a G Factor then go to "TE-5170V High Vol. TSP" excel spreadsheet.

Note: Calibration orifices should be sent back to Tisch Environmental for calibration on an annual basis per US EPA Compendium Method IO-2.1 Part 7.3.2 *Sampling of Ambient Air For Total Suspened Particulate Matter (SPM) and PM_{10} Using High Volume (HV) Sampler*

DRAFT

1. **Enter the following information in the corresponding cells in the worksheet:**

	Site Information
Location	The location of the instrument
Date	Current Date
Tech	Technician performing the calibration
Serial #	Serial number of the instrument, Pxxxx
VFC G Factor	The g-factor of the VFC you are calibrating. This can be found on the lookup table documentation (first page of this doc) or the sticker located on the VFC.

	Calibration Orifice Information
Make	The make of the orifice, typically Tisch Environmental
Model	The model number of the orifice, typically TE-5028A

Serial #	The Serial number of the calibration orifice you are using
Qa Slope (m)	The Qa slope of the calibration orifice you are using. This is found on the calibration documentation provided with the calibration orifice
Qa Int (b)	The Qa intercept of the calibration orifice you are using. This is found on the calibration documentation provided with the calibration orifice
Calibration Due Date	The date that the calibration of the orifice is due. Orifice should be calibrated on an annual basis. Call Tisch Environmental at 1-TSP-AND-PM10 to schedule a recalibration.

Ambient Conditions

Temp (Deg F)	Enter the current ambient temperature at calibration, Ta in Degrees K and Ta in degrees C will be calculated by the spreadsheet
Barometric Pressure	Enter the ambient barometric pressure (Pa) inches of Hg at calibration, the Pa in mmHg will be calculated by the spreadsheet

DRAFT

2. Enter the calibration information by performing each calibration point and entering the following information into each corresponding row for each point:

Calibration Information

Orifice "H_20	The pressure measured at the orifice port using a manometer. The first point should be performed with the orifice knob turned counter-clockwise or wide open, then four consecutive points turning the orifice knob clockwise (not closed) Good idea to take a few extra points here.
Sampler "H_20	The pressure measured at the sampler side port using a manometer (clear tubing that is connect to bulk head fitting that is connected to side of filter holder)

The calibrator flow is calculated (Qa) using the formula:

$$Qa = \frac{1}{Slope} x \sqrt{"H20x\left(\frac{Ta}{Pa}\right)} - Intercept$$

The calculated flow in m^3/min will be calculated using the g-factor formula, this flow will correspond to the flow found in the lookup table supplied with the VFC.

The percent difference will be calculated using the formula:

$$\%\ Difference = \frac{Calculated\ Flow - (Qa)\ \ Calibrator\ Flow}{(Qa)\ \ Calibrator\ Flow}\ x\ 100$$

As per stated in the method IO-2.1, % Difference calculations should be less than +-4%

3. To calculate the total air volume during the sample enter the following information:

Calculate Total Air Volume Using G-Factor

Average Temperature	Enter the average temperature of the sample throughout the sample period in Deg F. The temperature will then be calculated in Deg K
Barometric Pressure	Enter the average barometric pressure of the sample throughout the sample period in Inches of Hg. The barometric pressure in mmHg will then be calculated
Clean Filter "H_20	Enter the clean filter pressure in inches of water prior to sampling
Dirty Filter "H_20	Enter the dirty filter pressure in inches of water after sampling. The average sample pressure will then be calculated in mmHg
Runtime	Enter the total runtime in hours (xx.xx) of the sample

Using the g-factor formula, Po/Pa will be calculated and an average flow rate of the sample will be calculated in m^3/min. Using this information the total sample volume will be calculated.

If you do not have a G Factor, go to TE-5170V High Vol. TSP on web site

An example of a Volumetric Flow Controlled Sampler Calibration Data Sheet has been attached with data filled in from a typical calibration. This includes the transfer standard orifice calibration relationship which was taken from the Orifice Calibration Worksheet that accompanies the calibrator orifice.

DRAFT

The slope and intercept are taken from the Qactual section of the Orifice Calibration Worksheet.

The first step is to convert the orifice readings to the amount of actual air flow they represent using the following equation:

$$Qa = 1/m[Sqrt((H_2O)(Ta/Pa))-b]$$

where:
Qa = actual flow rate as indicated by the calibrator orifice, m3/min
H_2O = orifice manometer reading during calibration, in. H_2O
Ta = ambient temperature during calibration, K (K = 273 + °C)
Pa = ambient barometric pressure during calibration, mm Hg
m = slope of Q actual orifice calibration relationship
b = intercept of Q actual orifice calibration relationship.

Once these actual flow rates have been determined for each of the five run points, they are recorded in the column titled Qa, and are represented in cubic meters per minute. EPA guidelines state that at least three of these calibrator flow rates should be between 1.1 to 1.7 m3/min (39 to 60 CFM). This is the acceptable operating flow rate range of the sampler. If this condition is not met, the sampler should be recalibrated. An air leak in the calibration system may be the source of this problem. In some cases, a filter may have to be in place during the calibration to meet this condition.

The sampler H_2O readings need to be converted to mm Hg and recorded in the column titled Pf. This is done using the following equation:

$$Pf = 25.4\ (in.\ H_2O/13.6)$$

where: Pf is recorded in mm Hg
in. H_2O = sampler side pressure reading during calibration.

Po/Pa is calculated next. This is used to locate the sampler calibration air flows found in the Look Up Table. This is done using the following equation:

$$Po/Pa = 1 - Pf/Pa$$

where: Pa = ambient barometric pressure during calibration, mm Hg.

DRAFT

Using Po/Pa and the ambient temperature during the calibration, consult the Look Up Table to find the actual flow rate. Record these flows in the column titled Look Up.

Calculate the percent difference between the calibrator flow rates and the sampler flow rates using the following equation:

% Diff. = (Look Up Flow - Qa)/Qa * 100

where: Look Up Flow = Flow found in Look Up Table, m3/min
Qa = orifice flow during calibration, m3/min.

The EPA guidelines state that the percent difference should be within + or - 3 or 4%. If they are greater than this a leak may have been present during calibration and the sampler should be recalibrated.

Example Calculations

The following example problems use data from the attached VFC sampler calibration worksheet.

After all the sampling site information, calibrator information, and meteorological information have been recorded on the worksheet, actual air flows need to be determined from the orifice manometer readings taken during the calibration using the following equation:

1. Qa = 1/m[Sqrt((H$_2$O)(Ta/Pa))-b]

where:

2. Qa = actual flow rate as indicated by the calibrator orifice, m3/min
3. H$_2$O = orifice manometer reading during calibration, in. H$_2$O
4. Ta = ambient temperature during calibration, K (K = 273 + ^{o}C)
5. Pa = ambient barometric pressure during calibration, mm Hg
6. m = slope of Q actual orifice calibration relationship
7. b = intercept of Q actual orifice calibration relationship.

DRAFT

Note that the ambient temperature is needed in degrees Kelvin to satisfy the Qa equation. Also, the barometric pressure needs to be reported in millimeters of mercury (if sea level barometric pressure is used it must be corrected to the site elevation). In our case the two following conversions may be needed:

8. degrees Kelvin = [5/9 (degrees Fahrenheit - 32)] + 273
9. millimeters of mercury = 25.4(inches of H_2O/13.6)

Inserting the numbers from the calibration worksheet test number one we get:

10. Qa = 1/.92408[Sqrt((3.8)(293/749.3))- (-0.00383)]
11. Qa = 1.0821573[Sqrt((3.8)(.3910316)) + 0.00383]
12. Qa = 1.0821573[Sqrt(1.48592) + 0.00383]
13. Qa = 1.0821573[1.2189831 + 0.00383]
14. Qa = 1.0821573[1.2228131]
15. Qa = 1.323

It is possible that your answers to the above calculations may vary. This is most likely due to different calculators carrying numbers to different decimal points. This should not be an area of concern as generally these variations are slight.

With Qa determined, the sampler H_2O reading needs to be converted to mm Hg using the following equation:

16. Pf = 25.4 (in. H_2O/13.6)

where:
17. Pf is recorded in mm Hg
18. in. H_2O = sampler side pressure reading during calibration

Inserting the numbers from the worksheet:

19. Pf = 25.4(6.4/13.6)
20. Pf = 25.4(.4705882)
21. Pf = 11.95294 mm Hg

DRAFT

Po/Pa is calculated next. This is done using the following equation:

22. Po/Pa = 1 - Pf/Pa
23. where: Pa = ambient barometric pressure during calibration, mm Hg.
Inserting the numbers from the worksheet:
24. Po/Pa = 1 – 11.95294/749.3
25. Po/Pa = 1- .0159521
26. Po/Pa = .984

Use Po/Pa and the ambient temperature during the calibration (Ta) to locate the flow for the calibration point in the Look Up table. Record this in the column titled Look Up. Calculate the percent difference using the following equation:

27. % Difference = (Look Up flow - Qa)/Qa * 100
Inserting the numbers from the worksheet:
28. % Difference = (1.287 - 1.323)/1.323 * 100
29. % Difference = (-0.036)/1.323 * 100
30. % Difference = (-0.0272108) * 100
31. % Difference = -2.72

It is possible that your answers to the above calculations may vary. This is most likely due to different calculators carrying numbers to different decimal points. This should not be an area of concern as generally these variations are slight.

The above calculations have to be performed for all five calibration points. Once this is done, the calibration is complete.

DRAFT

Use of Look-Up-Table to Determine Flow Rate

(NOTE: Individual Look-Up Tables will vary.)

1. Suppose the ambient conditions are:

Temperature: $T_a = 20\,^{o}C$

Barometric Pressure: P_a = 749.3 mm Hg (this must be station pressure which is not corrected to sea level)

2. Assume system is allowed to warm up for stable operation.

3. Measure filter pressure differential, P_f. This reading is the set-up reading plus pick-up reading divided by 2 for an average reading. This is taken with a differential manometer with one side of the manometer connected to the stagnation tap on the filter holder (or the Bulkhead Fitting) and the other side open to the atmosphere. Filter must be in place during this measurement.

Assume that:

Set-up Reading (clean filter): P_f = 12.6 in H_2O
Pick-up Reading (dirty filter): P_f = 16.0 in H_2O

P_f = (12.6 + 16.0)/2 = 14.3 in H_2O.

4. Convert P_f = to same units as barometric pressure.

P_f = 14.3 in H_2O / 13.61 x 25.4 = 26.687729 mm Hg

P_f = 26.69 mm Hg

5. Calculate pressure ratio.

$P_o/P_a = 1 - (P_f/P_a)$

NOTE: P_f and P_a MUST HAVE CONSISTENT UNITS

P_o/P_a= 1 - (26.69 / 749.3)

DRAFT

P_o/P_a = .964

6. Look up Flow Rate from table.
Table 1 is set up with temperature in ^oC and the Flow Rate is read in units of m^3/min (actual, ACMM). In table 2 the temperature is in ^oF and Flow Rate is read in ft^3/min (actual, ACFM).

a) For the example we will use Table 1.
Locate the temperature and pressure ratio entries nearest the conditions of:

$T_a = 20^oC$

P_o/P_a = .964

Example: Look-Up Table for Actual Flow Rate in Units of m^3/min

Temperature ^oC

Po/Pa	20	22	24	26	28
0.961	1.250	1.254	1.258	1.261	1.265
0.962	1.251	1.255	1.259	1.263	1.266
0.963	1.253	1.256	1.260	1.264	1.268
0.964	1.254	1.258	1.262	1.265	1.269
0.965	1.255	1.259	1.263	1.267	1.271
0.966	1.257	1.261	1.264	1.268	1.272

b) The reading of flow rate is:

Q_a = 1.254 m^3/min (actual)

If your Po/Pa number is not in look up table ie; >.979 then interpolate.

DRAFT

7. Determine flow rate in terms of standard air.

$$Q_{std} = 1.254\, m^3/\min \left(\frac{749.3\, mm\, Hg}{760\, mm\, Hg}\right)\left(\frac{298K}{(273+20)\,K}\right)$$

$$Q_{std} = 1.257 \text{ std } m^3/\text{min}$$

DRAFT

Sampler Operation

1. After performing calibration procedure, remove filter holder frame by loosening the four wing nuts allowing the brass bolts and washers to swing down out of the way. Shift frame to one side and remove.

2. Carefully center a new filter, rougher side up, on the supporting screen. Properly align the filter on the screen so that when the frame is in position the gasket will form an airtight seal on the outer edges of the filter.

3. Secure the filter with the frame, brass bolts, and washers with sufficient pressure to avoid air leakage at the edges (make sure that the plastic washers are on top of the frame).

4. Wipe any dirt accumulation from around the filter holder with a clean cloth.

5. Close shelter lid carefully and secure with the "S" hook.

6. Make sure all cords are plugged into their appropriate receptacles and the rubber tubing between the blower motor pressure tap and the TE-5009 continuous flow recorder is connected (be careful not to pinch tubing when closing door).

7. Prepare TE-5009 continuous flow recorder as follows:

    a. Clean any excess ink and moisture on the inside of recorder by wiping with a clean cloth.

    b. Depress pen arm lifter to raise pen point and carefully insert a fresh chart.

    c. Carefully align the tab of the chart to the drive hub of the recorder and press gently with thumb to lower chart center onto hub. Make sure chart is placed under the chart guide clip and the time index clip so it will rotate freely without binding. Set time by rotating the drive hub clock-wise until the correct time on chart is aligned with time index pointer.

DRAFT

d. Make sure the TE-160 pen point rests on the chart with sufficient pressure to make a visible trace.

8. Prepare the 7-Day Timer as instructed below.

9. At the end of the sampling period, remove the frame to expose the filter. Carefully remove the exposed filter from the supporting screen by holding it gently at the ends (not at the corners). Fold the filter lengthwise so that sample touches sample.

10. It is always a good idea to contact the lab you are dealing with to see how they may suggest you collect the filter and any other information that they may need.

DRAFT

Timer Preparation

TE-5007 7-Day Mechanical Timer

1. To set the "START" time, attach a (bright) "ON" tripper to the dial face on the desired "START" time. Tighten tripper screw securely.

2. To set the "STOP" time, attach a (dark) "OFF" tripper to the dial face on the desired "STOP" time. Tighten tripper screw securely.

3. To set current time and day, grasp dial and rotate **clockwise only** until correct time and day appear at time pointer.

Troubleshooting

note: this is a general troubleshooting guide, not all problem may apply to every sampler

Problem	Solution
Brush Motor Won't Turn On	-Check Motor brushes(Change every 300-400 hours) -Check Motor(Should be replaced after 2 brush changes about 1200 hours) -Check power supply -Ensure that all electrical connections are secure -Make sure timer is on -Make sure flow controller(if applicable) is adjusted properly -Check for loose or damaged wires
Brushless Motor Won't Turn On	-Ensure that all electrical connections are secure -Check power supply -Make sure timer is on -Check for loose or damaged wires
Mechanical timer not working	-Make sure trippers are set properly -Make sure that trippers are not pressed against switch at start up, the timer need to rotate a few degrees before the trippers hit the switch -Check for loose or damages wires -Check power supply -Check electrical hook up diagram to ensure correct installation -Check Motor
Digital timer not working	-Check timer settings -Make sure current date and time are correct -Make sure power cords are properly connected -Check fuse on main PC board (F3) -Check Power Supply -Check Motor
Elapsed Time Indicator not working	-Check Power Supply -Check electrical connections

DRAFT

Flow Rate Too Low	-Check for leaks -Check filter media placement -Ensure only one piece of filter paper is installed -Check Flow Controller -Check flow valve(TE-1000PUF samplers only) -Ensure proper voltage is being supplied -Check calibration
Chart Recorder not working	-Replace pen point -Make sure pen point is touching chart -Make sure pen point is on “0” -Make sure tubing from motor is in place -Check Power Supply -Check motor
Air Leaks	-Make sure all gaskets are in place -Make sure all connections are secure -Makes sure connections are not over tightened -Check for damaged components: Filter holder screen, gaskets, motor flanges

DRAFT

Maintenance and Care

A regular maintenance schedule will allow a monitoring network to operate for longer periods of time without system failure. Our customers may find that the adjustments in routine maintenance frequencies are necessary due to the operational demands on their sampler(s). We recommend that the following cleaning and maintenance activities be observed until a stable operating history of the sampler has been established.

1. Make sure all gaskets (including motor cushion) are in good shape and that they seal properly.

2. The power cords should be checked for good connections and for cracks (replace if necessary).

   CAUTION: DO NOT allow power cord or outlets to be immersed in water!

3. Inspect the filter screen and remove any foreign deposits.

4. Inspect the filter holder frame gasket each sample period and make sure of an airtight seal.

5. Check or replace motor brushes every 300 to 400 running hours.

6. Make sure elapsed time indicator is working properly.

DRAFT

Motor Brush Replacement

(110 volt Brush part #TE-33392)
(220 volt Brush part #TE-33378)

The following steps are accompanied by pictures to aid your understanding of motor brush replacement procedures. **Please be aware that the pictures are standardized and may not exactly match the equipment that you are using.** Motor brush removal and replacement does not change based on motor or brush type, so do not be confused if your equipment differs from what is pictured.

CAUTION: Unplug the unit from any line voltage sources before any servicing of blower motor assembly.

1. Remove the VFC device by removing the eight bolts. This will expose the gasket and the TE-115923 motor.

2. Turn assembly on side, loosen the cord retainer and then push cord into housing and at the same time let motor slide out exposing the brushes.

3. Looking down at motor, there are 2 brushes, one on each side. Carefully pry the brass quick disconnect tabs (the tabs are pushed into end of brush) away from the expended brushes and toward the armature. Try to pry the tabs as far as you can without damaging the armature.

4. With a screwdriver loosen and remove brush holder clamps and release brushes. Carefully, pull quick disconnect tabs from expended brushes.

DRAFT

5. Carefully slide quick disconnect tabs into tab slot of new brush.

6. Push brush carbon against armature until brush housing falls into brush slot on motor.

7. Put brush holder clamps back onto brushes.

8. Make sure quick disconnect tabs are firmly seated into tab slot. Check field wires for good connections.

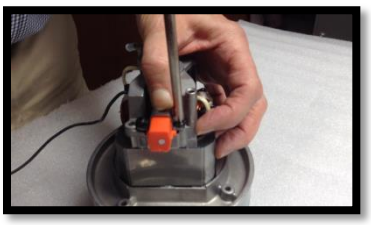

9. Assemble motor after brush replacement by replacing the motor cushion and metal motor ring(s), placing housing over and down on the motor (at same time pull power cord out of housing), being careful not to pinch any motor wires beneath the motor spacer ring.

10. Secure power cord with the cord retainer cap.

11. Replace VFC device on top of motor making sure to center gasket.

DRAFT

****IMPORTANT**** To enhance motor life:

1. Change brushes before brush shunt touches armature.
2. Seat new brushes by applying 50% voltage for 10 to 15 minutes, the TE-5075 brush break in device allows for the 50% voltage.

110v VFC Motor

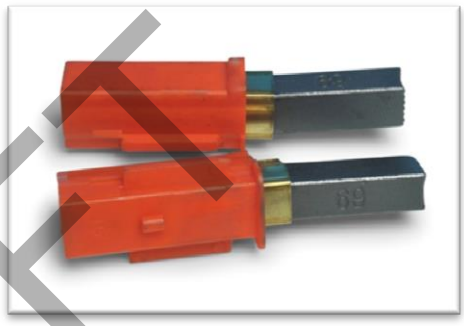

110v VFC Motor Brush(orange)

220v VFC Motor

220v VFC Motor Brush (brown)

DRAFT

Warranty

Instruments manufactured by Tisch Environmental, Inc. are guaranteed by warranty to be free of defects in materials and workmanship for one year after shipment from Tisch Environmental factories. The liability of Tisch Environmental, Inc. is limited to servicing or replacing any defective part of any instrument returned to the factory by the original purchaser. All service traceable to defects in original material or workmanship is considered warranty service and is performed free of charge. The expense of warranty shipping charges to and from our factory will be borne by Tisch Environmental. Service performed to rectify an instrument malfunction caused by abuse, acts of god or neglect, and service performed after the one-year warranty period will be charged to the customer at the current prices for labor, parts, and transportation. Brush-type and brushless motors will carry a warranty as far as the original manufacture will pass through its warranty to Tisch Environmental, Inc. The right is reserved to make changes in construction, design specifications, and prices without prior notice.

DRAFT

Assembly Drawings

TE-5070 Blower Motor Assembly with VFC Device

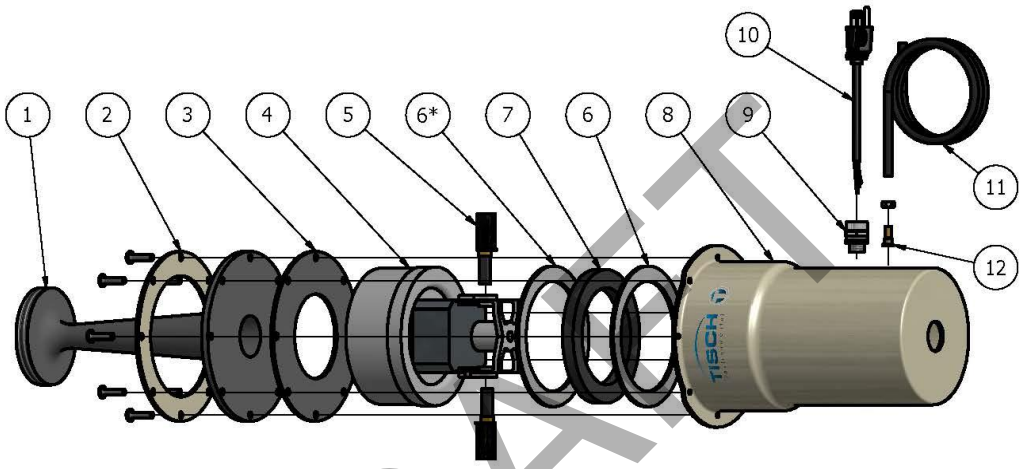

TE-5070 w/ TE-10557 Assembly			
ITEM	QTY	PART NUMBER	DESCRIPTION
1	1	TE-10557	Volumetric Flow Controller
2	1	TE-5070-3	Clamp Ring w/ 8 Hole Pattern for VFC Motor Housing
3	1	TE-5070-1	Gasket w/ 8 Holes VFC Flange Gasket
4	1	TE-115923 TE-116111	Motor for 110V VFC Blower Motor for 220V VFC Blower
5	2	TE-33392 TE-33378	Motor Brushes for 110V Motor VFC Motor Brushes for 220V Motor VFC
7	1	TE-5005-4	Motor Cushion
6	2	TE-5005-5	Motor Spacer Ring
8	1	TE-5070-2	VFC Aluminum Blower Motor Housing
9	1	TE-5005-7	Cord Retainer w/ Nut
10	1	TE-5010-4	Power Cord
11	1	TE-5005-6	Tubing 3 ft. Piece
12	1	TE-5005-8	Pressure Tap

*ONLY FOR 110V MOTOR TE-115923

DRAFT

TE-5003V Filter Holder Assembly

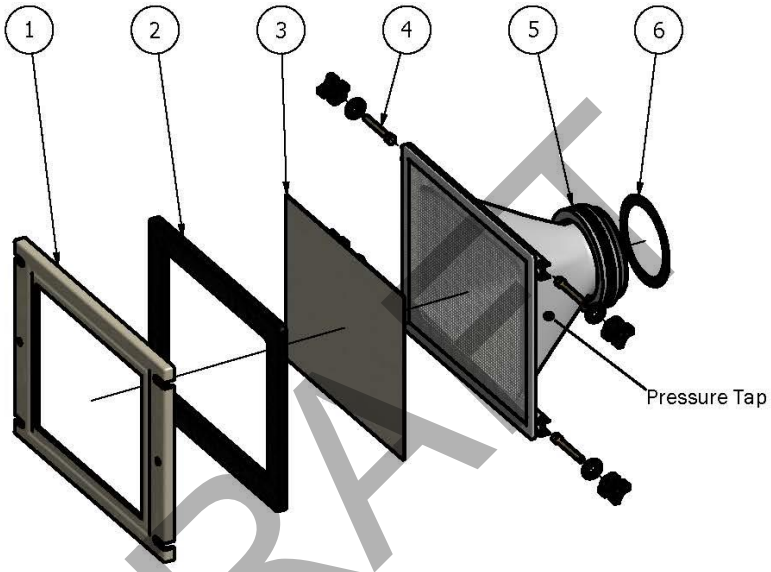

DRAFT

TE-5003V Filter Holder Assembly			
ITEM	QTY	PART NUMBER	DESCRIPTION
1	1	TE-3000-2	Hold Down Frame
2	1	TE-5018	8" x 10" Gasket
3	1	N/A	Filter Paper
4	4	TE-5003-9	Plastic Thumb Nut, Brass Bolt, Washer, and Rivet
5	1	TE-5028-9	Aluminum Threaded Ring
6	1	TE-5005-9	Filter Holder Gasket (Between Filter Holder and Blower Motor)

Calibration Worksheets

TE-5170V Calibration Worksheet

Site Information

Location:	Cleves Ohio	**Site ID:**	145	**Date:**	31-Oct-14
Sampler:	TE-5170V	**Serial No:**	P8644 TSP	**Tech:**	Jim Tisch

Site Conditions

Temp (deg F):	68.0		
Ta (deg K):	293	**Barometric Press (in Hg):**	29.50
Ta (deg C):	20	**Pa (mm Hg):**	749

Calibration Orifice

Make:	Tisch	**Qa Slope:**	0.92408
Model:	TE-5028A	**Qa Intercept:**	-0.00383
Serial#:	2978.00	**Calibration Due Date:**	24-Oct-15

Calibration Data

Run Number	Orifice "H2O	Qa (m3/min)	Sampler "H2O	Pf (mm Hg)	Po/Pa	Look Up (m3/min)	% Diff
1	3.80	1.323	6.40	11.944	0.984	1.287	-2.72
2	3.80	1.323	6.80	12.691	0.983	1.286	-2.80
3	3.80	1.323	7.20	13.437	0.982	1.284	-2.95
4	3.75	1.315	9.25	17.263	0.977	1.278	-2.81
5	3.75	1.315	10.20	19.036	0.975	1.275	-3.04

Calculations

Calibrator Flow (Qa) = 1/Slope*(SQRT(H20*(Ta/Pa))-Intercept)
Pressure Ratio (Po/Pa) = 1-Pf/Pa
% Difference = (Look Up Flow-Calibrator Flow)/Calibrator Flow*100

NOTE: Ensure calibration orifice has been certified within 12 months of use

Tisch Environmental 145 South Miami Ave, Cleves OH 45002 • 877.263.7610 • sales@tisch-env.com • www.tisch-env.com

DRAFT

TE-5170V Sampler Calibration Worksheet
(Using G-Factor)

Site and Calibration Information

Site		Calibration Orifice	
Location:	Cleves, OH	Make:	Tisch Environmental
Date:	Oct 31, 2014	Model:	TE-5028A
Tech.:	Jim Tisch	Serial:	1179
Sampler:	TE-5170V	Qa Slope (m):	0.92408
Serial #:	P8644 TSP	Qa Int (b):	-0.00383
VFC G-Factor:	0.0974264900	Calibration due date:	10/24/15

Ambient Conditions

Temp (deg F):	68.0		
Ta (deg K):	293	Barometric Press (in Hg):	29.50
Ta (deg C):	20.0	Pa (mm Hg):	749.3

Calibration Information

Run Number	Orifice "H2O	Qa m3/min	Sampler "H2O	Pf mm Hg	Po/Pa	Calculated m3/min	% of Diff
1	3.80	1.323	6.40	11.944	0.984	1.287	-2.72
2	3.80	1.323	6.80	12.691	0.983	1.286	-2.80
3	3.80	1.323	7.20	13.437	0.982	1.284	-2.95
4	3.75	1.315	9.25	17.263	0.977	1.277	-2.81
5	3.75	1.315	10.20	19.036	0.975	1.274	-3.04

Calculate Total Air Volume Using G-Factor

Enter Average Temperature During Sampling Duration (Deg F)	62.00
Average Temperature During Sampling Duration (Deg K)	289.67
Enter Average Barometric Pressure During Sampling Duration (In Hg)	29.40
Average Barometric Pressure During Sampling (mm Hg)	746.76
Enter Clean Filter Sampler Inches of Water	12.60
Enter Dirty Filter Sampler Inches of Water	16.00
Average Filter Sampler (mm Hg)	26.69
Enter Total Runtime in Hours (xx.xx)	23.90
Po/Pa :	0.964
Calculated Flow Rate (m3/min):	1.254
Total Flow (m3):	1797.57

Calculations

Calibrator Flow (Qa) = 1/Slope*(SQRT(H20*(Ta/Pa))-Intercept)

Pressure Ratio (Po/Pa) = 1-Pf/Pa

% Difference = (Look Up Flow-Calibrator Flow)/Calibrator Flow*100

NOTE: Ensure calibration orifice has been certified within 12 months of use

Tisch Environmental 145 South Miami Ave, Cleves OH 45002 • 877.263.7610 • sales@tisch-env.com • www.tisch-env.com

DRAFT

Calibration Certificate

TISCH ENVIRONMENTAL, INC.
145 SOUTH MIAMI AVE
VILLAGE OF CLEVES, OH
45002
513.467.9000
877.263.7610 TOLL FREE
513.467.9009 FAX

ORIFICE TRANSFER STANDARD CERTIFICATION WORKSHEET TE-5028A

Date - Oct 24, 2014 Rootsmeter S/N 9833620 Ta (K) - 296
Operator Tisch Orifice I.D. - 2978 Pa (mm) - 755.65

PLATE OR VDC #	VOLUME START (m3)	VOLUME STOP (m3)	DIFF VOLUME (m3)	DIFF TIME (min)	METER DIFF Hg (mm)	ORFICE DIFF H2O (in.)
1	NA	NA	1.00	1.1880	4.5	1.50
2	NA	NA	1.00	0.9230	7.5	2.50
3	NA	NA	1.00	0.8380	9.0	3.00
4	NA	NA	1.00	0.7790	10.5	3.50
5	NA	NA	1.00	0.5860	18.0	6.00

DATA TABULATION

Vstd	(x axis) Qstd	(y axis)	Va	(x axis) Qa	(y axis)
0.9950	0.8375	1.2254	0.9940	0.8367	0.7665
0.9910	1.0737	1.5819	0.9901	1.0727	0.9896
0.9891	1.1803	1.7329	0.9881	1.1791	1.0840
0.9871	1.2671	1.8718	0.9861	1.2659	1.1709
0.9771	1.6674	2.4507	0.9761	1.6657	1.5331

Qstd slope (m) = 1.47574
intercept (b) = -0.00613
coefficient (r) = 0.99985

y axis = SQRT[H2O(Pa/760)(298/Ta)]

Qa slope (m) = 0.92408
intercept (b) = -0.00383
coefficient (r) = 0.99985

y axis = SQRT[H2O(Ta/Pa)]

CALCULATIONS

Vstd = Diff. Vol[(Pa-Diff. Hg)/760](298/Ta)
Qstd = Vstd/Time

Va = Diff Vol [(Pa-Diff Hg)/Pa]
Qa = Va/Time

For subsequent flow rate calculations:

Qstd = 1/m{[SQRT(H2O(Pa/760)(298/Ta))]- b}
Qa = 1/m{[SQRT H2O(Ta/Pa)]- b}

DRAFT

APPENDIX D

DRAFT

Tisch Environmental
TE-Wilbur10
TE-Wilbur 2.5
Low Volume Air Particulate Sampler

DRAFT

TE-Wilbur Operations Manual Table of Contents

1.0 Introduction 8

1.1 TE-Wilbur Overview 8

1.2 US EPA FRM Designation 9

1.3 Copyrights and Trademarks 10

1.4 References 10

1.5 Warranty 10

1.6 Symbols Used in This Document 11

1.7 Safety Warnings 11

1.8 Ratings 12

1.9 Major Component Diagram 13

1.10 Sampler Dimensions for Wilbur $PM_{2.5}$ (with TE-PM2.5C) 14

1.11 Sampler Dimensions for Wilbur PM_{10} (without TE-PM2.5C) 15

2.0 Assembly and Installation 16

2.1 Packing List 16

2.2 Unpacking unit 17

2.3 Placing unit on Stand 21

2.4 Electrical Connection 22

2.5 Other Connections 23

2.6 Siting 24

2.7 Instrument Setup 25

2.8 Choosing Language 26

3.0 Quick Start Guide 27

4.0 Filter Holder / Filter Handling 29

4.1 Filter Holder 29

4.2 Operating the Filter Holder 31

4.3 Filter Temperature Probe 32

4.4 Adjusting the Filter Holder 33

4.5 Filter Holder Maintenance 33

DRAFT

4.6 Filter and Filter Cassette 34
4.7 Lot, Field and Lab Blanks 36
Lot Blanks 36
Field Blanks 37
Lab Blanks 37
4.8 Filter Pre-Conditioning and Weighing 37
Conditioning of clean unexposed filters 37
Pre-weighing of unexposed filters 38
4.9 Field Sample Handling 39
4.10 Filter Post-Conditioning and Weighing 40
Conditioning of exposed filters 40
Using the Filter Cassette Removal Tool (TE-W-400) 40
Weighing of exposed filters 41
4.11 Calculating Mass Concentrations 42
4.12 Data Validation 43
5.0 PM_{10} Inlet / $PM_{2.5}$ Cyclone 44
5.1 TE-PM10 Inlet 44
5.2 Cleaning the PM_{10} Inlet 45
5.3 TE-PM2.5C Cyclone 46
5.4 Cleaning the TE-PM2.5C Cyclone 47
5.5 Placing of the Cyclone and PM_{10} Head 48
6.0 Sample Setup 49
6.1 Site and Filter ID 49
6.2 USEPA Sample Setup 49
6.3 Custom Sample 54
6.4 Canceling a Sample 54
6.5 Sample Alarms 55
6.6 More Sampling Information 57
6.7 Other Sampling Features 57

DRAFT

7.0 Calibration 58

7.1 Ambient Temperature Calibration 58

7.2 Filter Temperature Calibration 59

7.3 Barometric Pressure Calibration 61

7.4 Volumetric Flow Calculation 62

7.5 Flow Calibration 63

7.6 Flow Calibration Equations 66

7.7 Flow Calibration Audit / Verification 68

7.8 Pressure Sensor Zero Trim 69

7.9 TE-Wilbur Calibration Worksheet Instructions 70

8.0 Screen Maintenance 73

8.1 Changing Date and Time 73

8.2 Change Screen Brightness 74

8.3 Battery Disconnect 75

8.4 Manual Control 75

8.5 System Information 77

8.6 Data Download Menu 78

8.7 Update Firmware 79

8.8 Change Sample Setpoint 82

8.9 Change MODBUS Address 82

8.10 Datalogging Time 83

9.0 Data Logging / Operational Data 84

9.1 Operational Data 84

9.2 Downloading Data to USB 85

9.3 Datalog and Sample Summary Datalog 86

9.4 Erasing the Datalog 90

10.0 History Log 91

10.1 History Log Introduction 91

10.2 Alarms and Events 93

10.3 Alarm Flowchart 96

10.4 History Log Download 96

DRAFT

10.5 Erasing the History Log 97

11.0 Leak Checks 98

11.1 Leak Check Introduction 98

11.2 External Leak Check 99

11.3 Internal Leak Check 101

11.4 Leak Check Troubleshooting 104

12.0 Solar / Alternative Energy 105

12.1 Introduction 105

12.2 Solar Wiring Overview 105

12.3 Solar Accessories 106

12.4 Solar Siting Guidelines 106

12.5 Solar Controller Operation 108

12.6 Proper Solar Panel Orientation 108

Direction to face a solar panel 108

Proper Solar Panel Tilt 109

13.0 Maintenance 111

13.1 Electrical System 111

Turning on the system 111

Powering off the system 112

Electrical System Layout 113

13.2 Fuse Location and Replacement 114

13.3 Replacing the Batteries 115

13.4 Replacing the Screen Internal Battery 116

13.5 Sample Pump Maintenance 117

13.6 Filter Holder Maintenance 121

To replace the filter holder o-rings: 121

13.7 UPS System Replacement 122

13.8 Power Supply Replacement 123

13.9 Controller Replacement 126

13.10 Flowmeter Replacement 130

13.11 Pressure Sensor Replacement 131

DRAFT

13.12 Barometric Pressure Sensor Replacement 132
13.13 Filter Temperature Probe Replacement 134
13.14 Ambient Temperature Replacement 134
13.15 Solenoid Replacement 135
13.16 Pump Controller Replacement 137
13.17 Touch Screen Replacement 139
13.18 Power Button Replacement 141
13.19 Power Fail Relay Replacement 143
13.20 Louver Filter Media Replacement 146
14.0 Troubleshooting 147
14.1 Service Locations 147
14.2 Electrical System 147
14.3 Touchscreen Troubleshooting 149
14.4 Flowmeter 151
14.5 Barometric Pressure 152
14.6 Temperature Sensors 153
14.7 Pump system 154
14.8 Pressure Sensor 155
14.9 Solenoid 156
14.10 Exhaust Fan 156
14.11 Lighting Strip 157
14.12 Solar / Alternative Energy 157
14.13 Communications 157
15.0 Communications 158
15.1 Introduction 158
15.2 Ethernet Connection 158
15.3 Webserver Functions 160
15.4 Remote Data Upload 162
15.5 MODBUS Configuration 164
15.6 MODBUS Data Map 166

DRAFT

Appendix A: Parts List 168

A.1 Parts List 168

A.2 Filter Holder Parts List 171

A.3 Optional Accessories 173

A.4 Solar Option Parts List 173

A.5 O-Ring Replacement Part Numbers 173

Appendix B: Drawings 174

B.1 Electrical Terminal TB1 connections 174

B.2 TE-Wilbur Drawings 175

B.3 Enclosure Stand Drawing 178

B.4 TE-PM2.5C Drawing 179

B.5 TE-PM10 Drawings 180

Appendix C: Revision History 182

Appendix D: Software Revision History 184

DRAFT

1.0 Introduction

This instrument (TE-WILBUR) is named to honor Wilbur P. Tisch, an innovator and pioneer in the design and construction of particulate monitoring instruments since the 1950s. Wilbur and his father contracted with the US Department of Public Health (before the US EPA was commissioned) to develop a high volume air sampler which would become the first active particulate monitoring instrument used to monitor particulate matter in ambient air. As a result of Wilbur's 60+ years in this industry, more than one million instruments have been put to work collecting air samples that have been used to learn the effects and health issues of particulate concentrations in our air. Wilbur serves as the Ambassador of Tisch Environmental while working with his three sons Bob, Jim and John. Wilbur's rich work ethic, diligence, productiveness and conscientious attitude have laid the foundation for the success of Tisch Environmental. With four generations of experience, leadership and know-how, the Tisch family would like to welcome you to the company and thank you for choosing Tisch Environmental.

1.1 TE-Wilbur Overview

TE-Wilbur is a filter-based, ambient air particulate sampler. The USEPA has designated it a federal reference method for the collection of $PM_{2.5}$ and PM_{10} particulates using model number TE-Wilbur2.5 for $PM_{2.5}$ and TE-Wilbur10 for PM_{10}. This product is capable of collecting several different size fractions of particulate matter. When configured for collection of PM_{10}, only the PM_{10} size selective inlet (TE-PM10-D) is installed. When configured to collect $PM_{2.5}$, the TE-PM2.5C cyclone or WINS impactor is installed downstream of the PM_{10} size selective inlet. A TSP (Total Suspended Particulate) option is also available.

The unit has many features that make operation very simple and straightforward. The unit utilizes a full-color active touch screen and menus that makes operation quick and easy to understand. Operation of the unit is simple, with screens guiding the operator each step of the way. Sample run summary data is downloaded with a USB thumb drive and presented in a .CSV format. The system monitors and records all system sensors such as flow, temperatures and barometric pressure, and also records the system pressure, filter temperature variation, and flow total which provides the operator or laboratory technician additional information on the sample if warnings or alarms occurred during the sample run. The system runs solely from 24VDC power. An Uninterruptible Power Supply (UPS) is incorporated into the system that allows the system to keep operating for several hours

DRAFT

during a power loss. Although this system is not intended for running a full 24 hour sample without mains power, the system includes an external power connection that can be used to connect larger external batteries, solar, wind or any other 24VDC alternative energy sources. Help menus are included on the screen to assist the operator with calibration, leak checking and other features of the system. The system provides remote Ethernet control and monitoring from any standard browser and a Modbus interface for remote telemetry connections.

1.2 US EPA FRM Designation

The US EPA has designated the Tisch Environmental TE-Wilbur10 and TE-Wilbur2.5 as a Federal Reference Method (FRM) and a Federal Equivalency Method (FEM) per the table below for the measurement of particulate matter in ambient air based on the requirements of 40 CFR Part 53. This unit is a gravimetric method and meets all requirements of 40 CFR Part 50 Appendix L and has been tested and meets the requirements of 40 CFR Part 53.

Method	Configuration	Designation Type	Designation Number
PM_{10}	TE-PM10-D PM_{10} head	FRM	RFPS-0714-216
$PM_{2.5}$	TE-PM10-D PM_{10} head with VSCC Cyclone or WINS Impactor	FRM	RFPS-1014-219
$PM_{2.5}$	TE-PM10-D PM_{10} head TE-PM2.5C Cyclone	FEM Class II	EQPS-0415-223
$PM_{10-2.5}$ *Requires collocation of (2) samplers	Sampler 1: ($PM_{2.5}$) TE-PM10-D PM10 head with VSCC Cyclone or WINS Impactor Sampler 2: (PM_{10}) TE-PM10-D PM10 head	FRM	RFPS-1014-220
$PM_{10-2.5}$ *Requires collocation of (2) samplers	Sampler 1: ($PM_{2.5}$) TE-PM10-D PM10 head with TE-PM2.5C Sampler 2: (PM_{10}) TE-PM10-D PM10 head	FEM Class II	EQPS-0415-224

DRAFT

1.3 Copyrights and Trademarks

The 'Wilbur' trade name and Tisch logos are copyrights of Tisch Environmental, Inc. The software used in this instrument is proprietary intellectual property of Tisch Environmental and is not to be reproduced or replicated in any way.

1.4 References

This manual references the *US EPA Quality Assurance Guidance Document 2.12, Monitoring $PM_{2.5}$ in Ambient Air Using Designated Reference or Class I Equivalent Methods* which can be obtained from the Human Exposure and Atmospheric Sciences Division at the National Exposure Laboratory, Research Triangle Park, NC 27711. Updates to this document will take precedence over materials contained in this operations manual.

1.5 Warranty

Instruments manufactured by Tisch Environmental, Inc. are guaranteed by warranty to be free of defects in materials and workmanship for one year after shipment from Tisch Environmental factories. The liability of Tisch Environmental, Inc. is limited to servicing or replacing any defective part of any instrument returned to the factory by the original purchaser. All service traceable to defects in original material or workmanship is considered warranty service and is performed free of charge. The expense of warranty shipping charges to and from our factory will be borne by Tisch Environmental. Service performed to rectify an instrument malfunction caused by abuse, acts of god or neglect, and service performed after the one-year warranty period will be charged to the customer at the current prices for labor, parts, and transportation. The right is reserved to make changes in construction, design specifications, and prices without prior notice.

DRAFT

1.6 Symbols Used in This Document

The following symbols are used in this document

Shock hazard – this symbol is used to make the operator aware that there is a potential for an electrical shock hazard

General Attention – this symbol is used to make the operator aware of an important directive

1.7 Safety Warnings

Service and repair of this instrument should only be attempted by a trained technician whom is familiar with electrical safety.

Do not remove the inner enclosure covers without disconnecting mains power and powering down the unit completely.

Use grounded electrical connections at all times to prevent inadvertent electrical shock hazards.

Only use outdoor rated cords to supply mains power to the instrument. The power cord supplied with the instrument has an outdoor rated insulation.

Care should be taken when operating the filter holder mechanism that fingers do not get pinched in the mechanism.

When installing the unit outdoors, ensure the unit is securely fastened to a level, hard surface and that measures are taken to prevent the unit from tipping over.

DRAFT

1.8 Ratings

Electrical	120 VAC / 60 Hz / 0.5 Amps 230 VAC / 50 Hz / 0.25 Amps Minimum Mains voltage 100 VAC Maximum Mains voltage 240 VAC Mains power is interrupted by a 1 amp circuit breaker. The system operates from a 24 VDC / 60 watt power supply that is fused at 2.5 amps using a quick-blow fuse.
Temperature	-25ºC to 50ºC
Weight	47 lbs / 21.8 kg without stand 40 lbs without stand and battery pack 83 lbs total shipping weight complete Shipping dimensions: 19x31x42” (48.3x78.7x106.7cm)
Dimensions	20”W x 20”H x 10”D / 508 mm x 508 mm x 254 mm
Flow System	Range 0 – 25 Liters per minute with an accuracy of ±3% of full scale (0.75 Lpm) with a repeatability of ±1% of full scale (0.25 Lpm) and resolution of 0.01 Lpm.
Ambient Temperature	The ambient temperature sensor is a PT100 RTD with an accuracy of ±0.15ºC and a resolution of 0.01ºC.
Filter Temperature	The filter temperature sensor is a PT100 RTD with an accuracy of ±0.15ºC and a resolution of 0.01ºC.
Barometric Pressure Sensor	The barometric pressure sensor is ranged 450 mmHg to 1238 mmHg and has an accuracy of ±10.00 mmHg and a resolution of 0.75 mmHg.

DRAFT

1.9 Major Component Diagram

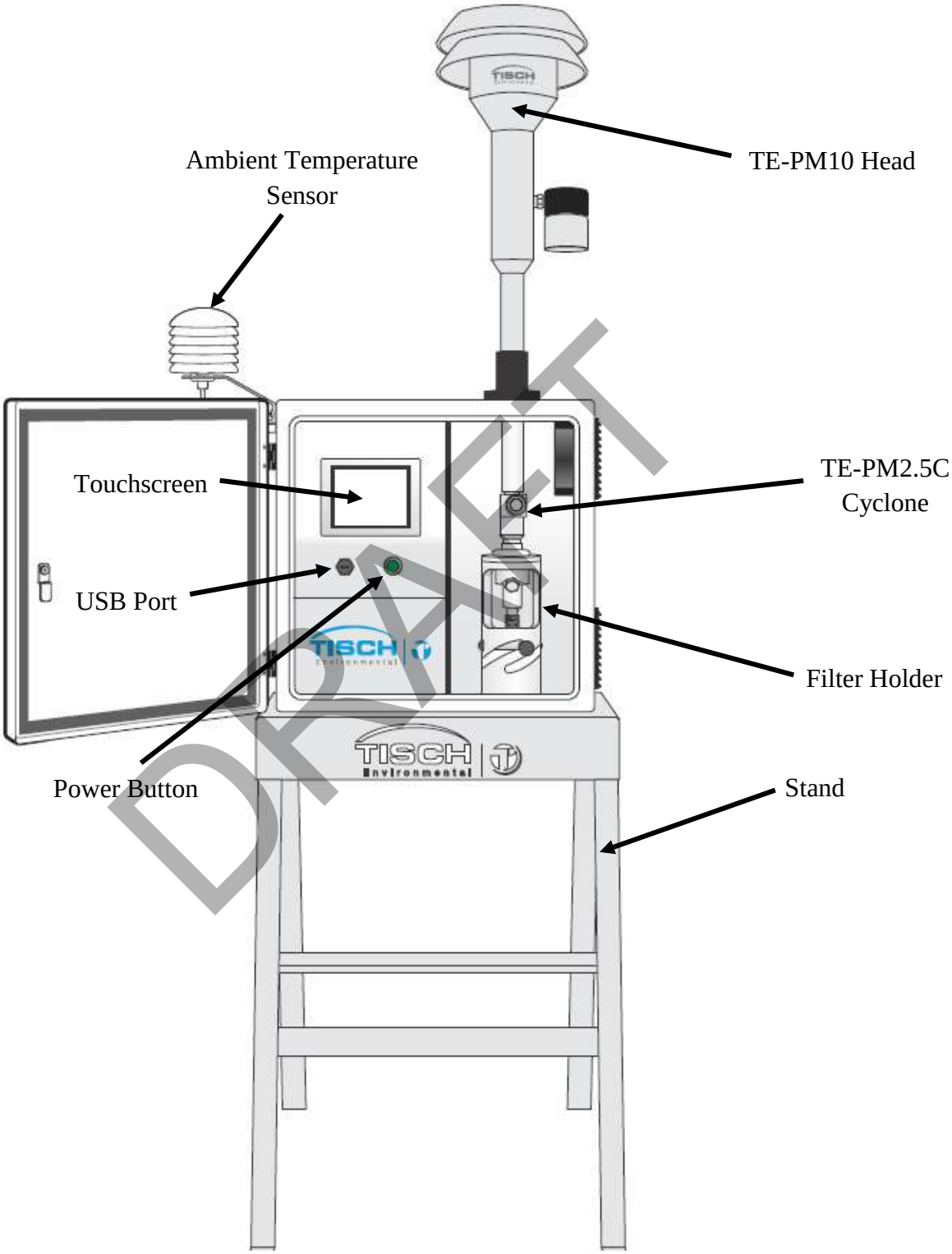

DRAFT

1.10 Sampler Dimensions for Wilbur $PM_{2.5}$ (with TE-PM2.5C)

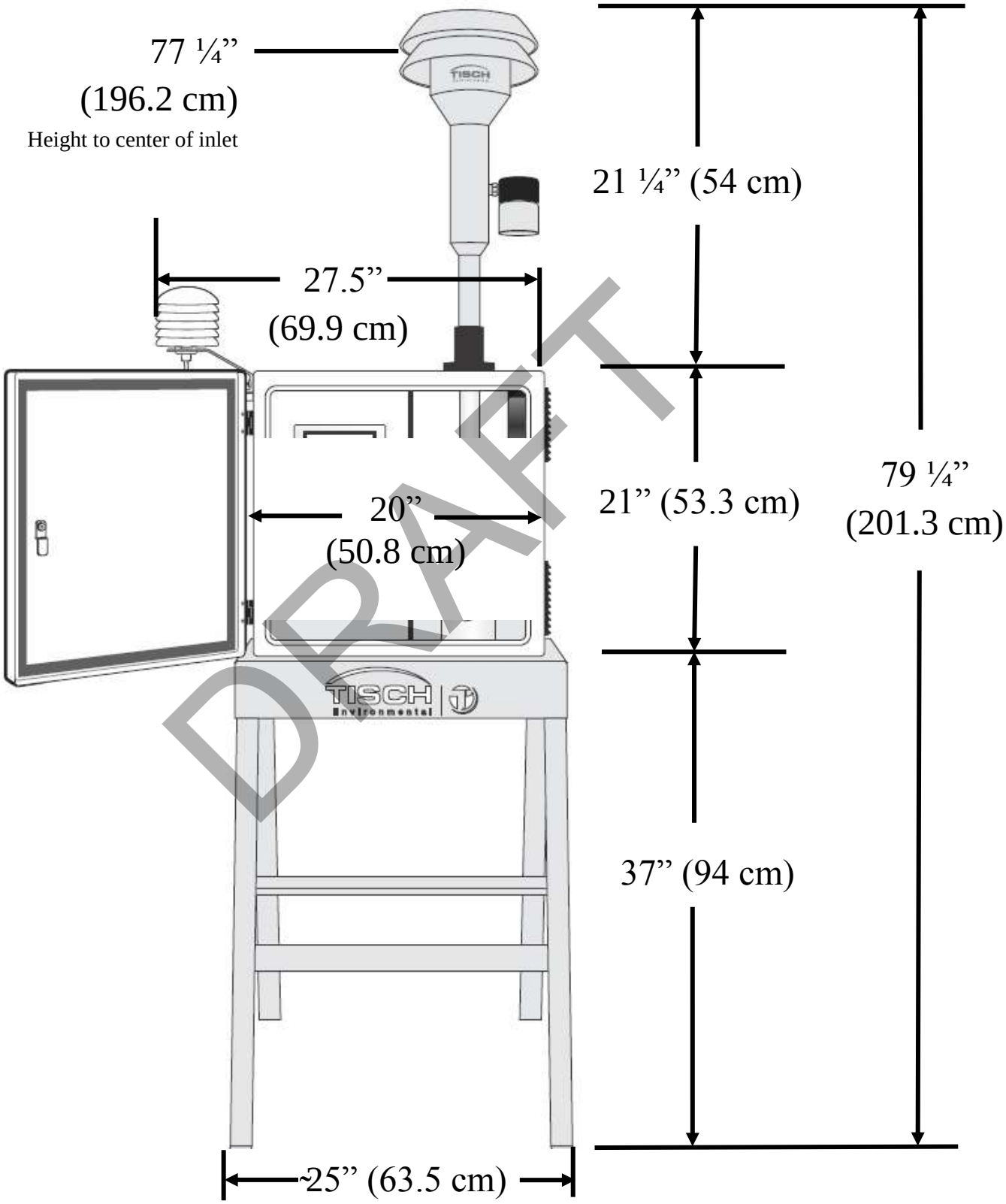

DRAFT

1.11 Sampler Dimensions for Wilbur PM_{10} (without TE-PM2.5C)

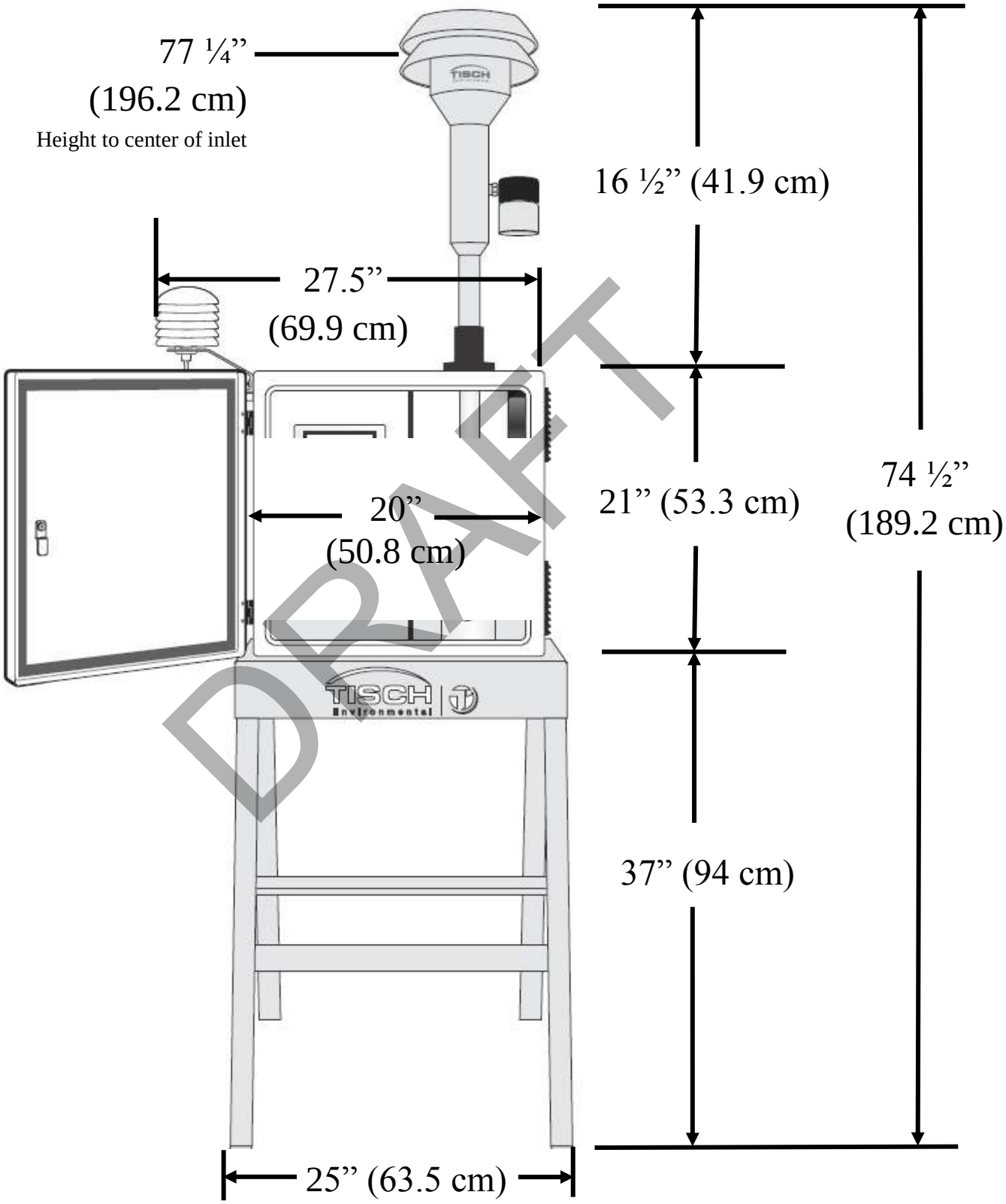

DRAFT

2.0 Assembly and Installation

This section describes the unpacking, assembly and installation of TE-Wilbur.

2.1 Packing List

The TE-Wilbur PM sampler is packed in one complete box with the following packing components.

Quantity	Part Number	Description
1	TE-Wilbur2.5/10	TE-Wilbur unit configured either for $PM_{2.5}$ or PM_{10} collection
1	TE-PM-10-D	Tisch Environmental PM_{10} head with downtube
1	TE-PM2.5C	TE-PM2.5C cyclone fractionator
1	TE-W-STAND	Stand with (4) ¼-20 x ¾" SS bolts, (2) Mounting brackets and (8) ¼-20 x ¾" SS bolts for mounting enclosure to stand
1	TE-W-151	Ambient temperature probe with radiation shield
1	TE-FH47	Filter cassette with screen, tin and anti-static bag
1	TE-W-004	Internal Leak Check Disk
1	TE-W-005	Product Manual
1	TE-W-107	USB stick
2	TE-W-062	1/4-20 x 5/8" SS bolts to mount ambient temperature probe and shield
1		Build summary / Testing checklist

DRAFT

2.2 Unpacking unit

The TE-Wilbur is packed in one complete box. To unpack the unit, follow these steps:

1. Place the box in the upright position and open one of the sides.

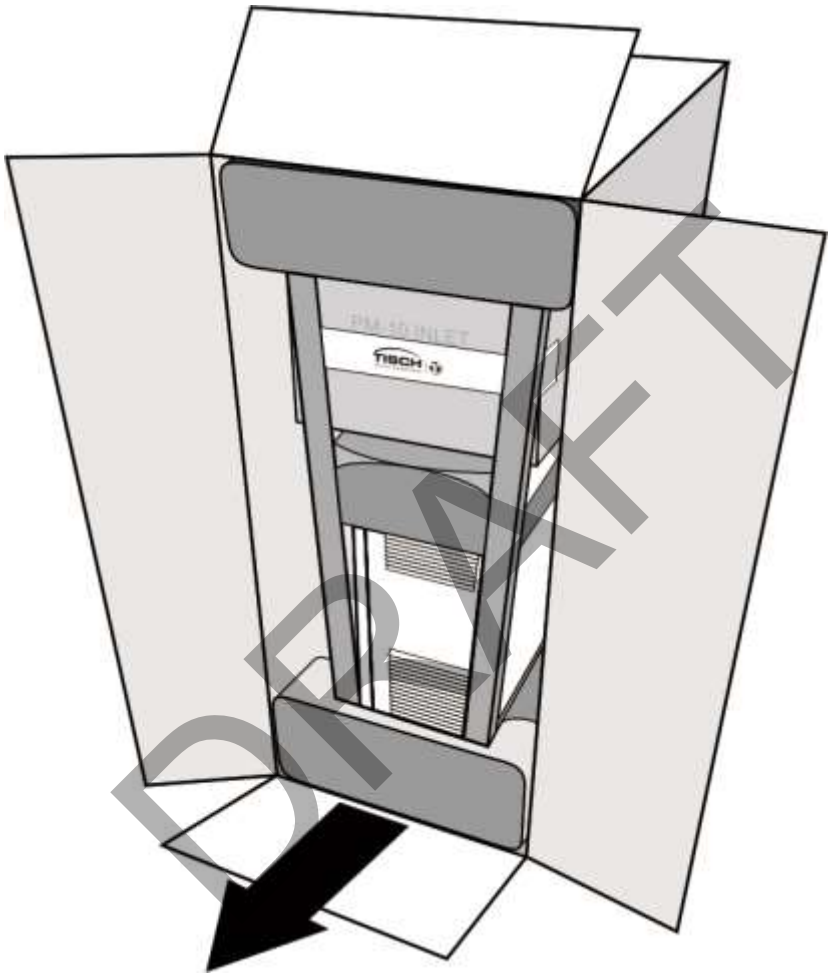

DRAFT

2. Remove the entire unit from the box by pulling from the bottom portion of the stand, sliding it from the box.

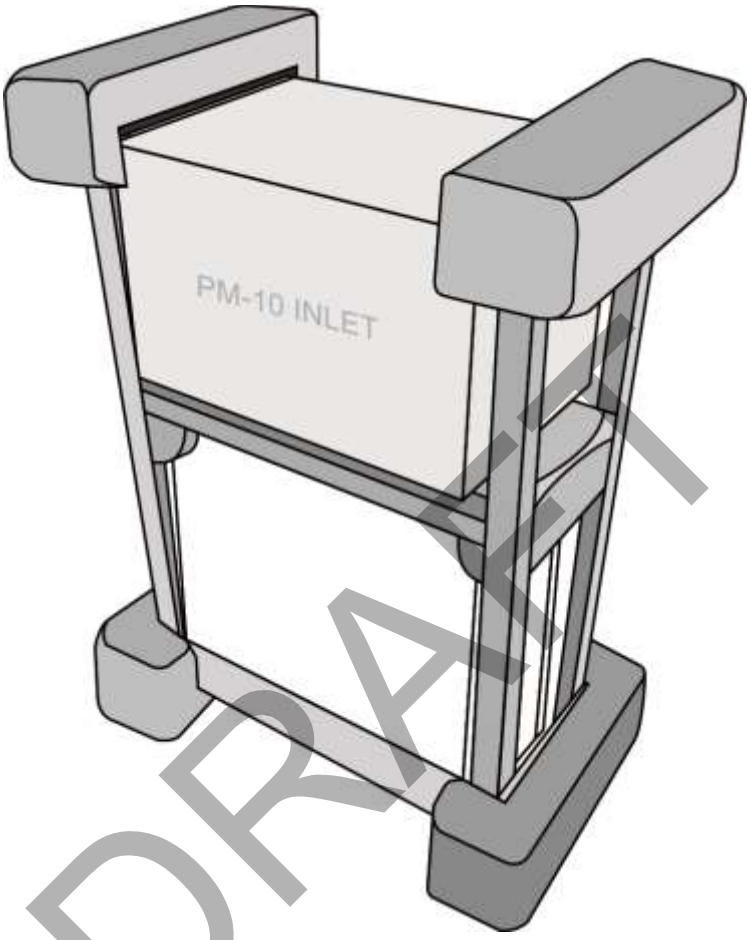

DRAFT

3. Remove the two top foam inserts and the top box, which will contain the PM_{10} head and/or cyclone and all of the miscellaneous parts and instruction manual.

4. Spread the stand legs apart and remove the two foam inserts on top of the enclosure.

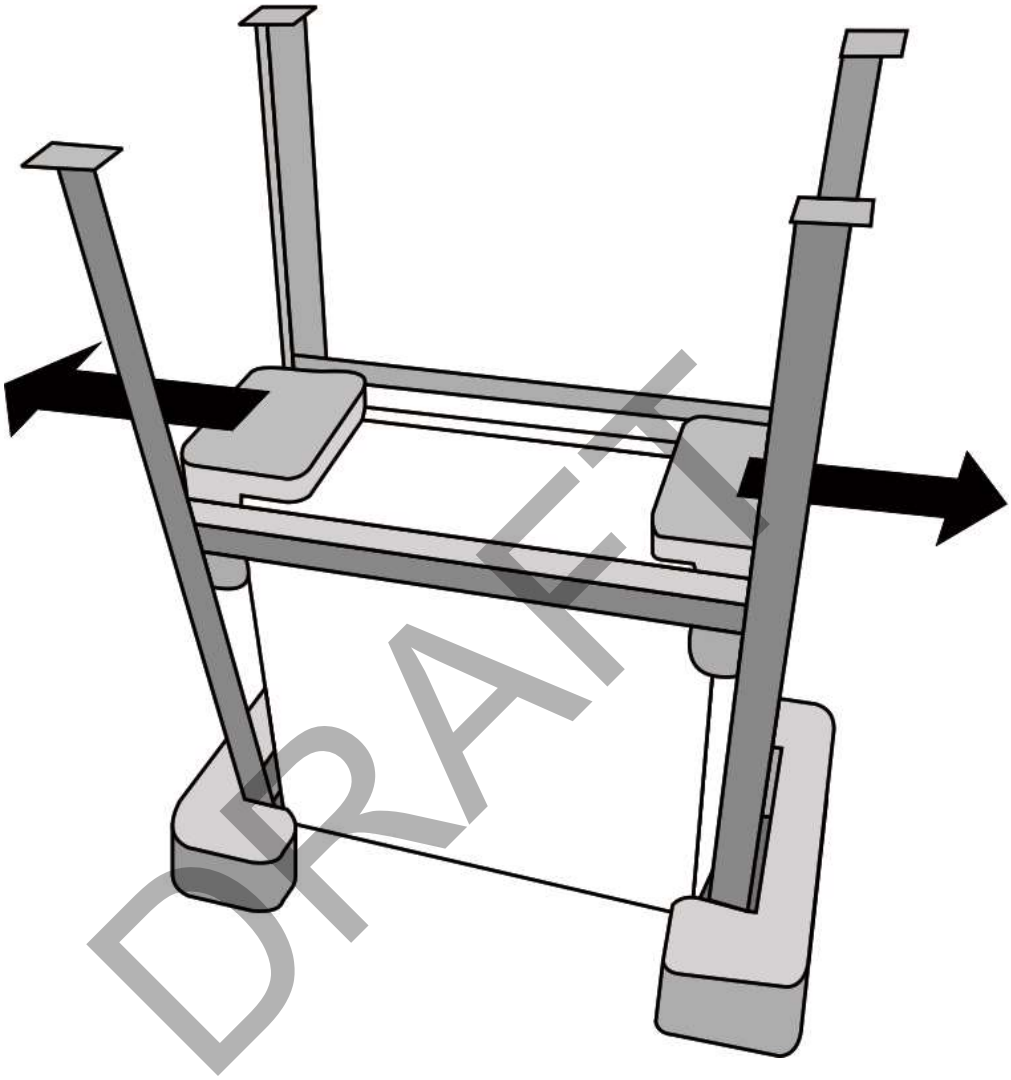

5. Remove the TE-Wilbur sampler from inside of the stand and remove the stand from the bottom two foam inserts

6. Place the stand in the upright position.

7. Using the (4) supplied ¼-20 x ¾" stainless steel bolts, secure the stand legs by screwing in one bolt on each side of the stand top/leg as shown.

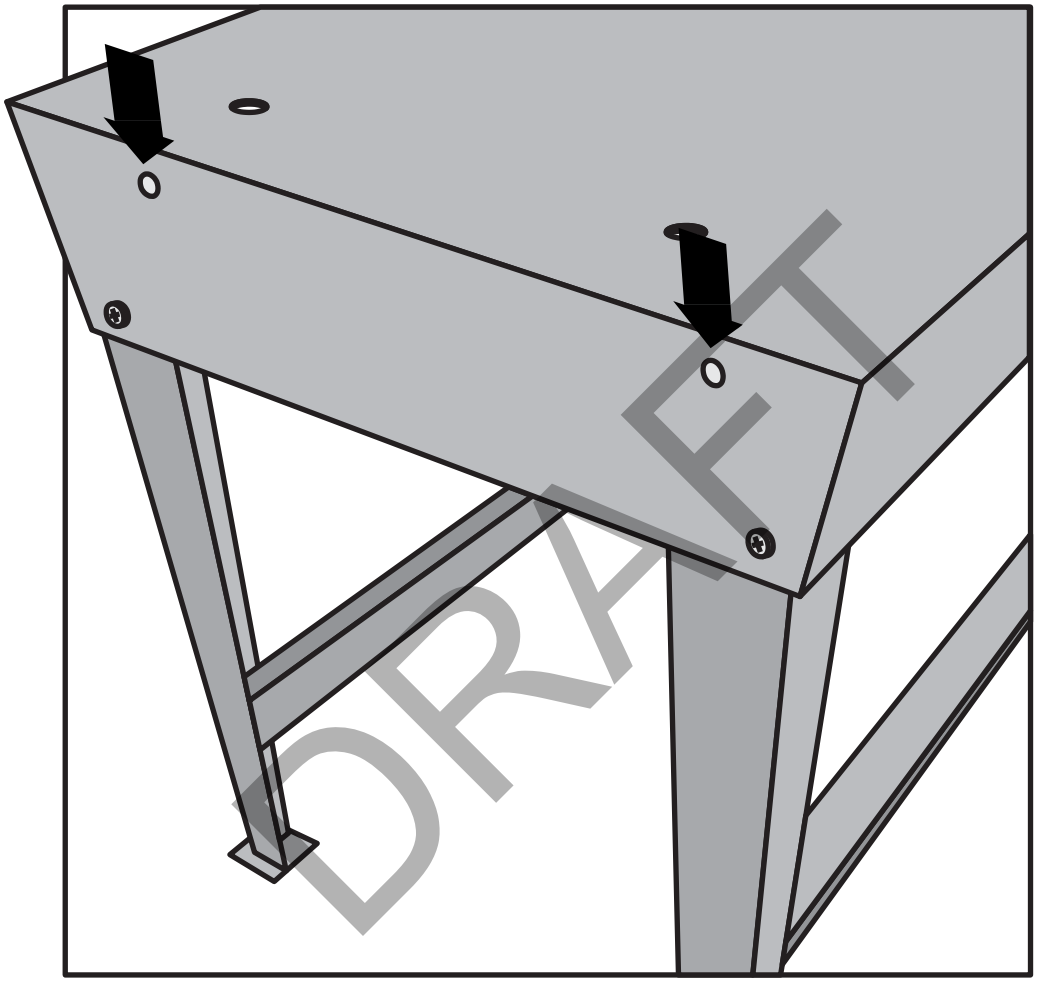

2.3 Placing unit on Stand

The TE-Wilbur sampler is supplied with an enclosure stand that allows the inlet to be placed 2m ± 0.2m above ground. To place the sampler on the stand, follow these steps:

1. Unpack the stand and enclosure.
2. Place the stand on a level surface.
3. Secure the stand. The stand has holes in the feet that can be used to secure the unit to a level surface. The use of sandbags can also secure the unit to a level surface to prevent the unit from being knocked over.

NOTE: The stand needs to be secured to prevent tipping over and causing injury or damage to the unit.

4. Place sampler on top of stand, aligning the two holes on either bottom side with the bracket holes located on the side of the stand.

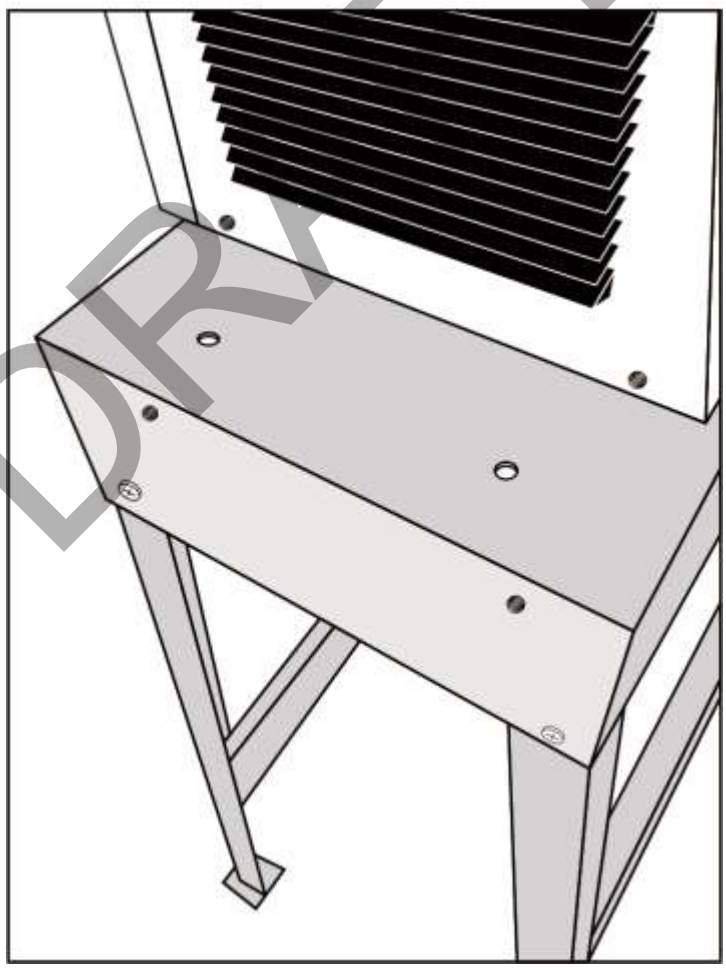

DRAFT

5. Place one of the mounting brackets onto the stand, aligning the holes in the stand and the enclosure with the holes in the mounting bracket. Secure the stand and the enclosure to the mounting bracket using the supplied ¼-20 x ¾" stainless steel bolts. Repeat for the other side. A total of (8) bolts are used to secure the enclosure to the stand.

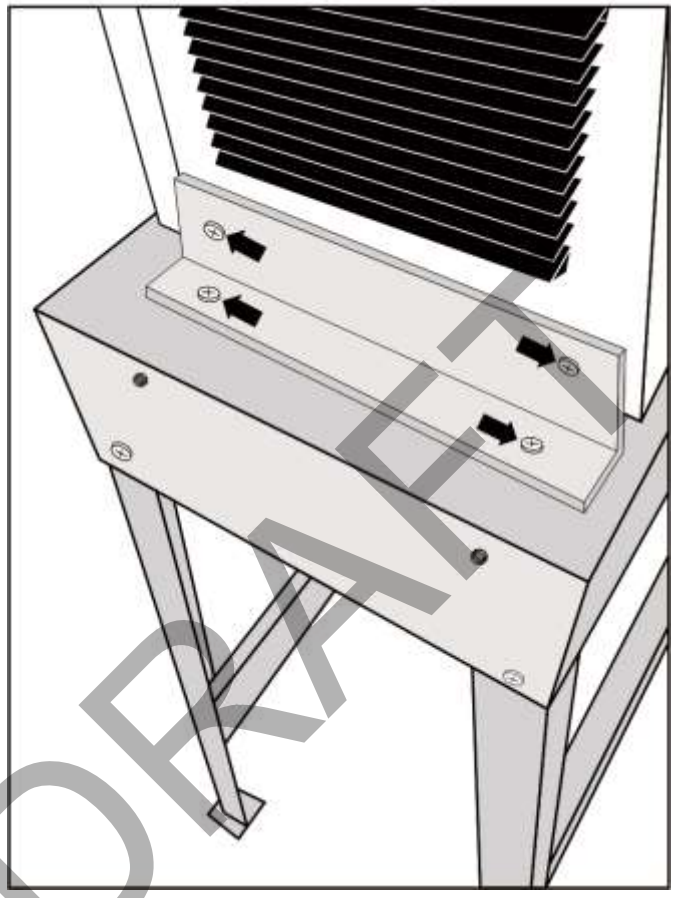

DRAFT

2.4 Electrical Connection

The TE-Wilbur sampler is configured with a universal IEC320 socket that is located in the weatherproof side box. A standard USA-style cord is supplied with each unit. Contact Tisch Environmental for different cord-end options.

A 1 amp AC circuit breaker that is resettable is also located in the side box below the power socket.

NOTE: Always use grounded connections when connecting AC mains to the unit. Shock hazards could result if proper grounding is not followed or if outdoor-rated cords are not used. If using extension cords inspect for wear and damage and follow all local and national electrical codes for installation.

2.5 Other Connections

There are 3 other connections external to the sampler that are located in the weatherproof side box.

MODBUS RJ11 connection – 2-wire serial Modbus cable part number: TE-W-501. See section 15.0 - Communications for MODBUS information.

Solar / 24VDC Connection to supply unit with remote 24VDC - batteries, solar, wind or other alternative energy sources. External 24VDC connection cable part number TE-W-502. See section 12.0 for more information.

Ethernet For remote monitoring and control – RJ45 Ethernet cable part number: TE-W-503. See section 15.0 for Ethernet information.

External Connections

DRAFT

2.6 Siting

Siting is important for proper collection of $PM_{2.5}$ or PM_{10} particulate matter. Refer to 40CFR Part 58, Appendix D and the guidance document for network design and optimum site exposure for $PM_{2.5}$ and PM_{10} published by the US EPA Office of Air Quality Planning and Standards (OAQPS).

The following installation guidelines should be observed:

- The sampler must have an unobstructed air flow for a minimum of 2 meters in all directions. Provide sufficient area for a collocated FRM sampler and for installation of a portable FRM performance evaluation (PE) sampler.

- The sampler's inlet should be placed at a height of 2-15m above ground level.

- If the sampler is collocated with any other samplers, the spacing between sampler inlets must be greater or equal to 1m if the other samplers are low-volume (16.67 Lpm and below). If high-volume samplers are collocated next to the sampler, the spacing between sampler inlets must be greater or equal to 2m. The spacing between any air inlets should be no more than 4m.

- Location safety – ensure to locate the unit in a safe location that can be accessed easily and that routine maintenance can be performed by the operator easily and safely. The unit weighs over 40lbs so care must be taken if ladders are needed to access the sampling site.

- Location security – ensure to locate the units in areas that are well secured such as on rooftops with locked access and ground level sites with fencing. If the ground level site has fencing, ensure it is chain link and does not impede air flow. The sampler's inlet should extend above the fence.

DRAFT

2.7 Instrument Setup

Prior to field installation, it is recommended to get familiar with the operation and use of the sampler. Once operators are familiar with the operation of the unit the following should be followed for proper field operation

- Follow the siting guidelines in 2.6.
- Place the stand on a level surface and secure if necessary with screws or sand-bags to prevent strong winds from knocking over unit.
- Place the sampler onto the stand and secure with the (8) provided bolts and brackets
- Place the downtube through the hole on top of the unit and push down into unit. If sampling for PM_{10}, push the downtube onto the top of the filter holder. If sampling for $PM_{2.5}$, place the TE-PM2.5C cyclone on top of the filter holder first, then push the downtube onto the cyclone.
- Place the PM_{10} head on top of the downtube.
- Attach the ambient temperature probe and radiation shield onto the left side of the enclosure with (2) 1/4-20 x 5/8" bolts and screw in the cable connection to the socket.
- Plug the sampler into a reliable AC electrical source that is grounded.
- Turn on the unit by pressing the green power button on the inside front cover of the unit.
- Allow the unit to equilibrate to ambient conditions. This could take up to an hour if ambient temperatures are very warm or cold.
- Set the time and date.
- Perform an external leak check.
- Perform a calibration check of the temperatures, barometric pressure and flow system– unit comes from the factory pre-calibrated.
- Enter the site ID.
- Turn power off by pressing the green power button and make sure the unit remains powered on the batteries.
- Turn power back on.
- Setup a sample and install a clean filter, enter the filter ID.
- The unit is ready for field operation.

DRAFT

2.8 Choosing Language

When the TE-Wilbur instrument is powered up, the following splash screen will appear:

This screen will allow the instrument's language to be changed. Available languages are English (US), Spanish and Chinese.

In order to change the language the instrument must be powered down completely.

DRAFT

3.0 Quick Start Guide

The TE-Wilbur system comes from the factory with the following functions performed:

- Leak Check Passed
- Flow System Calibrated
- Ambient Temperature Calibrated
- Filter Temperature Calibrated
- Barometric Pressure Calibrated
- Pressure sensor zeroed
- 48-hour burn-in test running at 16.67 Lpm
- Time and Date set for Eastern Time (UTC -5.00, Eastern Time)

Perform the following to place unit in service:	**Manual Section**
Unpack Unit from Shipping Box.	2.2
Determine sampling location	2.6
Place stand on level surface and secure stand with sand-bags or screw onto a fixed surface. Place the sampler onto the stand and secure with (8) ¾" ¼-20 bolts (included) and mounting brackets.	2.3
Secure the ambient temperature radiation shield / probe onto left side of unit with (2) ¾" ¼-20 bolts (included) and screw the probe connection into the socket.	2.7
Place the Cyclone on top of the filter holder, place the downtube through the downtube adapter and push onto the top of the cyclone (if configuring for PM_{10} do not place the cyclone onto the filter holder) Leave the PM_{10} head off for now in order to perform a leak check.	5.5
Plug the unit into an AC power source and press the green button to power on unit.	2.7
Unit should power on – if problems see Troubleshooting – Section 13.0.	
At the splash screen, choose your language.	
If you are not in EST time zone, change the time and date if necessary by going to: MAINTENANCE➔SET TIME AND DATE.	8.1

DRAFT

Perform an external leak check by placing the L30 leak check adapter on top of the down-tube and closing the valve. Then go to: MAIN MENU➔PERFORM LEAK CHECKS	11.0
Perform a flow calibration check of the flow system by going to: CALIBRATION➔FLOW CALIBRATION CHECK If the flow is within 4% no action is needed. If flow is not accurate, then a flow calibration must be performed. See section 6.5.	7.7
Check the barometric pressure, filter temperature and ambient temperature sensors, the values can be found by going to: MAIN MENU➔OPERATIONAL DATA If the sensors are not reading correctly, a calibration must be performed see section 6.0 – Calibration.	7.0
Enter the Site ID and Filter ID by going to: SAMPLE SETUP➔ENTER SITE AND FILTER ID	6.1
Choose the sample you would like to perform and the starting day: SAMPLE SETUP➔SET TO SAMPLE 1 in 6 DAYS (for example)	6.2
Place the PM_{10} head onto the top of the downtube.	5.5
Place a clean filter into the filter holder and close the filter holder.	4.0
Close the enclosure of unit.	
After sampling is complete, insert a USB thumb drive into the USB port and press download run summary data. After data downloads press 'EJECT USB' to eject the USB drive and then remove the USB drive.	9.0
Remove dirty filter and record all data as required by your agency.	
Place a new filter in the filter holder and close the filter holder.	
Update the filter ID and ensure the unit is still setup for the sample type you are running. The sample control screen will show the next date of the sample..	9.0

DRAFT

4.0 Filter Holder / Filter Handling

This section describes the TE-Wilbur Filter Holder and Filter Handling.

4.1 Filter Holder

The TE-Wilbur filter holder is used to hold the filter and filter cassette in place while sampling. The filter holder exploded view diagram is below:

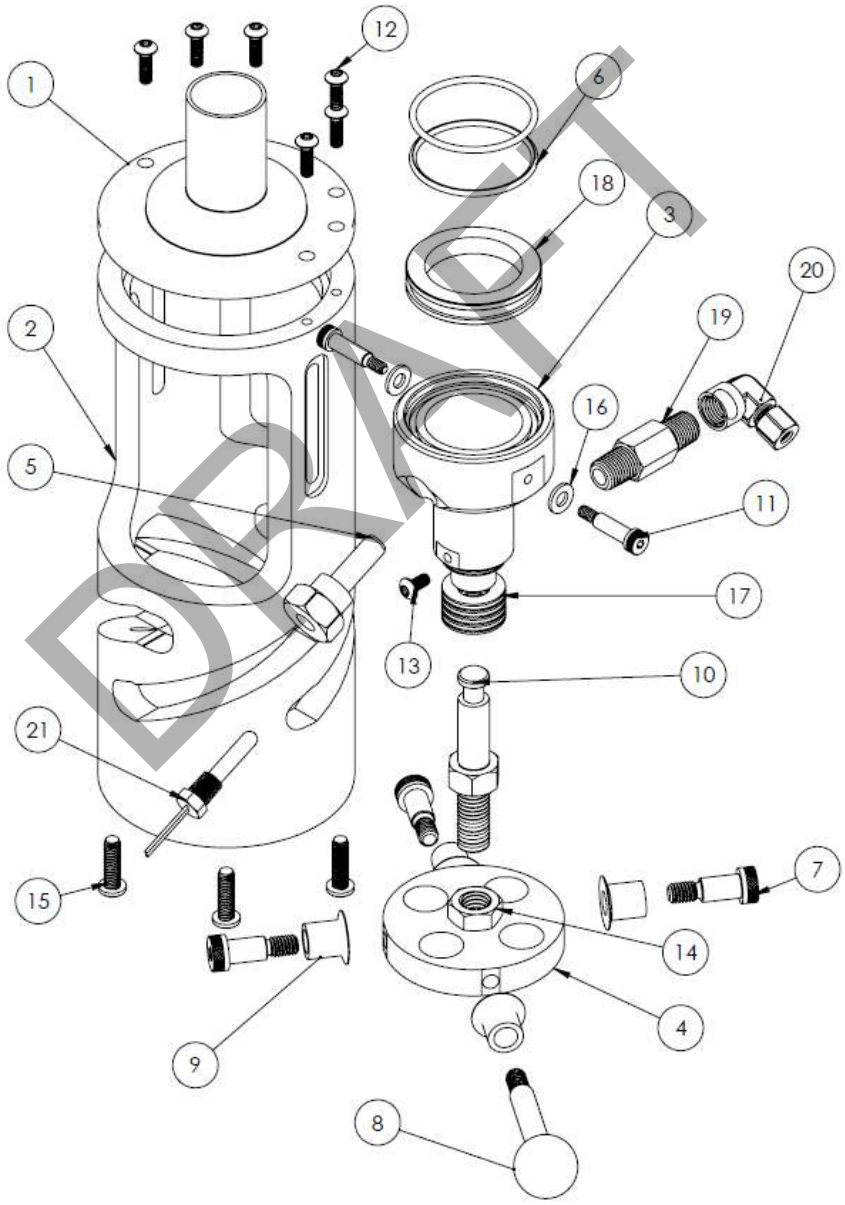

DRAFT

Number	Part Number	Description
1	TE-W-FH1	Top mate
2	TE-W-FH2	Helix Lever Base
3	TE-W-FH3	Bottom mate
4	TE-W-FH4	Cam lever plate
5	TE-W-FH5	Thermowell
6	TE-W-FH6	Bottom and top mate o-rings (Qty 2)
7	TE-W-FH7	5/16-18 shoulder bolt (Qty 3)
8	TE-W-FH8	Lever handle with ball (stainless steel)
9	TE-W-FH9	Cam bushing (Qty 4)
10	TE-W-FH10	Drive rod
11	TE-W-FH11	10-24 shoulder bolt (Qty 2)
12	TE-W-FH12	10-32 socket cap screw (Qty 6)
13	TE-W-FH13	Set screw
14	TE-W-FH14	Drive rod nut
15	TE-W-FH15	1/4-20 mounting bolts (Qty 4)
16	TE-W-FH16	PTFE washer (Qty 2)
17	TE-W-FH17	Belleville washers (Qty 10)
18	L27/L28/L29	Filter Cassette
19	TE-W-FH19	Filter holder hex nipple
20	TE-W-FH20	Compression fitting elbow
21	TE-W-152	PT100 RTD Filter Holder Temperature Probe

DRAFT

4.2 Operating the Filter Holder

Opening and closing the filter holder is accomplished by sliding the ball lever handle to the far left to open and to the far right to close. When in the final closed position the ball lever handle will 'click' in place.

Filter holder in the open position

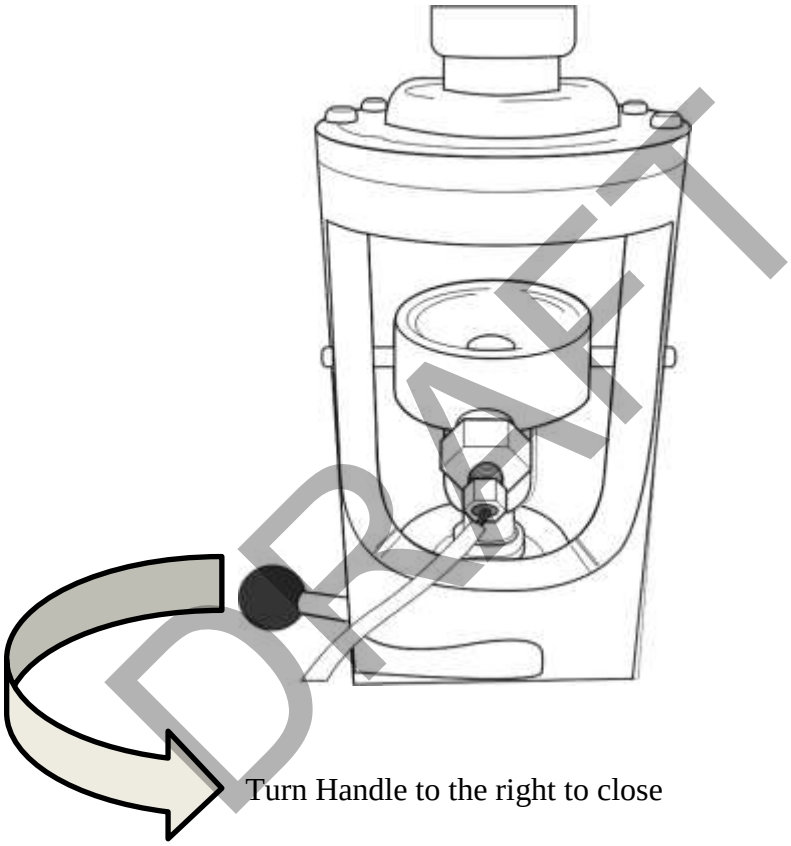

DRAFT

Filter holder in the closed position

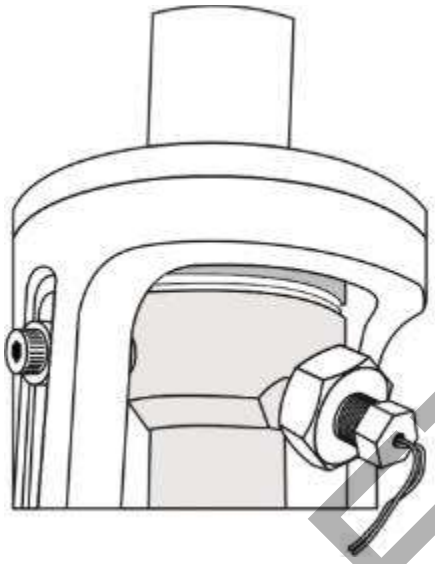

4.3 Filter Temperature Probe

The filter holder temperature probe is located in the bottom mate section of the filter holder and measures the temperature of the filter. It is housed inside of a thermowell. This thermowell is secured into the bottom mate and should never have to be removed. The filter temperature probe can be easily threaded into the thermowell by hand.

Illustration showing filter temperature probe

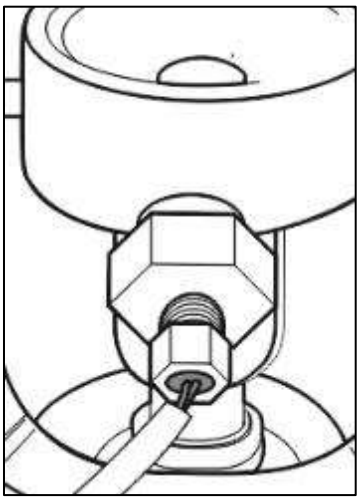

DRAFT

4.4 Adjusting the Filter Holder

The filter holder is factory adjusted and will likely never need adjustment. If the assembly should become loose and require adjustment, perform the following steps:

1. Loosen the drive rod nut (see item 14 in section 4.1) with a ¾" wrench and turn counterclockwise a few turns.
2. The drive rod (see item 10 in section 4.1) should now be able to be turned freely.
3. To tighten the filter holder mechanism turn the drive rod in a counterclockwise rotation a few turns with the filter holder wrench, turning it out of the cam lever plate (see item 4 in section 4.1).
4. To loosen the filter holder mechanism turn the drive rod in a clockwise location, turning it a few turns into the cam lever plate.
5. Test the tightness or looseness of the drive rod by opening and closing the filter holder.
6. Keep turning the drive rod until the desired tightness or looseness is achieved, and then tighten the drive rod nut by turning clockwise with the filter holder wrench securing it and the drive rod onto the cam lever plate.

4.5 Filter Holder Maintenance

The filter holder is maintenance free with the exception of tightening or loosening the mechanism if the system should become loose or is having an issue passing a leak check.

There are o-rings on the top and bottom mate pieces that seal the filter cassette. If there appears to be a leak in the system, inspect these for wear or damage. Replace if needed. See section 13.0 Maintenance for instructions on replacing the o-rings on the filter holder.

The filter holder should be cleaned on a monthly basis to keep stray particulate matter from affecting sampling results. The inside of the bottom and top mate and the top tube can be cleaned with distilled water or a general purpose cleaner and a soft cloth.

DRAFT

4.6 Filter and Filter Cassette

The filter specifications for $PM_{2.5}$ and PM_{10} sampling are detailed in *EPA QA Guidance Document 2.12 – Monitoring $PM_{2.5}$ in Ambient Air Using Designated Reference for Class I Equivalent Methods* and are as follows:

- Material – PTFE Teflon with integral support ring.
- Size- circular 46.2mm diameter +/- 0.25mm (with support ring).
- Support ring – Polymethylpentene (PMP) or equivalent inert material, 0.38 ± 0.04mm thickness, outer diameter 46.2 ± 0.25mm, and width of 3.68mm.
- Pore size – 2µm as measured by ASTM F 316-94.
- Thickness – 30-50µm.
- Maximum pressure drop of a clean filter is 30cm of water column at 16.67 L/min clean air flow.
- Maximum moisture pickup – no more than 10µg weight increase after 24 hour exposure to air at 40% RH, relative to the weight after a 24 hour exposure to air at 35% RH.
- Collection efficiency – greater than 99.7% as measured by the dioctyl phthalate (DOP) test (ASTM 1995c) with 0.3µm particles at the sampler's operating face velocity.
- Filter weight stability (including test for loose, surface-particle contamination and test for temperature stability) - filter weight loss ≤ 20µg in either test, measured as specified in 40CFR Part 50, App. L, section 6.9.
- Alkalinity – less than 25 micro-equivalents/g of filter, as measured in a procedure based on Appendix A of *EPA QA Guidance Document 2.12 – Monitoring $PM_{2.5}$ in Ambient Air Using Designated Reference ro Class I Equivalent Methods.*

DRAFT

Filter media can be purchased from Tisch Environmental:

PART NUMBER: Tisch Brand SF17138 for 60/pack of filters, Whatman brand TE-7592-104 and MTL brand TE-PT47AN 50/pack.

The filters should be inspected prior to use for:

- Holes or damage
- Discoloration
- Loose media on the filter
- Non-uniformity of the filter

The filter cassette is detailed in 40CFR Part 50 Appendix L. The filter cassette is made up of the following USEPA specified components:

L-27 Filter Cassette Upper Section
L-28 Screen
L-29 Filter Cassette Lower Section

The filter cassette can be purchased from Tisch Environmental:

PART NUMBER: TE-FH47

DRAFT

The filter cassette comes with a protective case and an anti-static bag and is assembled as follows:

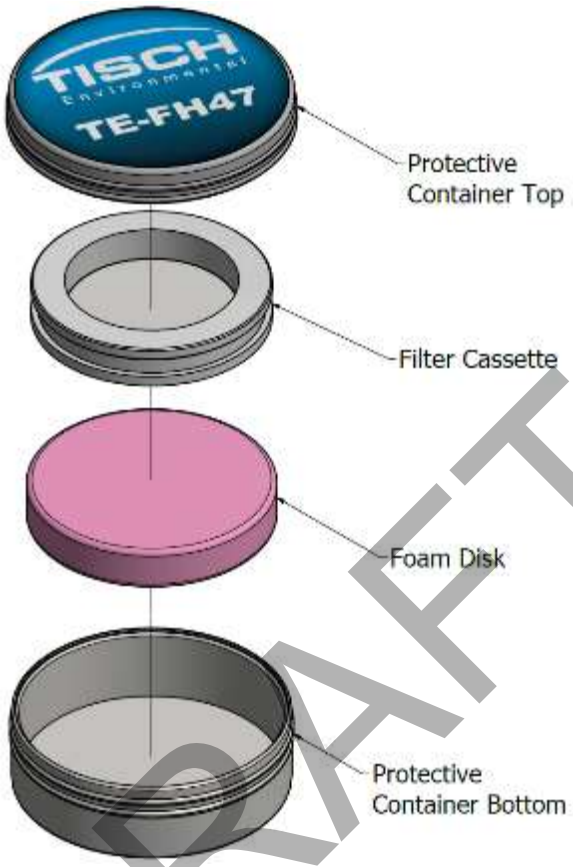

DRAFT

4.7 Lot, Field and Lab Blanks

Lot Blanks

Lot blanks are clean, unexposed filters that are used to determine the filter weight stability over a long period of time. Lot blanks are (3) filters selected from a single shipment of filters from a supplier. Lot blanks are conditioned for an initial 24 hours prior to the initial pre-weight determination. The (3) filters are then reweighed periodically (daily or weekly) and stored in the conditioning chamber with the other filters from the lot between being weighed.

This weighing of lot blanks should continue until the weekly weight change of the filters is less than 15µg. This determines the period of time a filter lot should be conditioned before it can be used for routine sampling.

Field Blanks

Field blanks are conditioned, weighed and clean unexposed filters that are used to determine if contamination occurs during sample setup, recovery and transport. Field blanks occur at 10% of the sampler's operating routine. Field blanks should be scheduled to ensure that a post weighing session contains 10% of blanks or at least (1) field blank.

Field blanks are taken out to the sampler, removed from their protective container and installed into the filter holder like a normal sample is. They are left there momentarily (a minute or two) then removed and placed back into their protective container. They are then left in the sampler's enclosure while the sampler is running a sample. Field blanks are retrieved along with the sample and weighed in the lab to determine if any contamination occurs in the field.

Lab Blanks

Lab blanks are clean, conditioned filters that are used to determine if any contamination or weight change is happening in the pre and post weighing functions in the laboratory. Laboratory blanks should be kept inside the conditioning chamber except during weighing. Each post-weighing session should include at least one laboratory blank. If the weight of the laboratory blank changes more than 15µg, there is contamination of the filters during the weighing process that need to be investigated and resolved.

DRAFT

4.8 Filter Pre-Conditioning and Weighing

NOTE: For PM_{10} and $PM_{2.5}$ sampling, refer to *EPA QA Guidance Document 2.12 – Monitoring $PM_{2.5}$ in Ambient Air Using Designated Reference for Class I Equivalent Methods* for information on filter weighing, conditioning and microbalance standards.

Conditioning of clean unexposed filters

New, unexposed filters must be conditioned in a conditioning environment for 24 hours before the pre-weighing. The mean %RH must be between 30 and 40 %RH ±5% over the 24 hours of conditioning and a mean temperature between 20 and 23ºC with a variability of no more than ±2ºC over the 24 hour conditioning period.

In the conditioning chamber the filter should be placed on a covered rack or an open-sided cabinet that will allow circulation over the filters while reducing the chance that airborne particulates will get onto the filters.

Take care that other filter media in the chamber does not contaminate the filters such as quartz and glass filter fibers. Filters should be conditioned in their filter-handling container such as a slide petri dish. Write the filter's unique filter ID onto the container's label. During conditioning, place the lid so it partially covers the open container.

Ensure with the use of lot blanks that the filter lot does not exhibit weight loss of more than 15µg per week.

Pre-weighing of unexposed filters

The filters must be weighed in the same room as they were conditioned in. Record the %RH and temperature and verify the mean temperature and %RH for the last 24 hours has remained between 20-23ºC (with instantaneous readings within ±2ºC) and 30-40% RH (with instantaneous readings within ±5%RH.

Using clean forceps two working mass reference standards must be weighed as a QC check such as 100mg and 200mg. Record these weights. If these weights disagree by more than 3µg from their actual weight, they must be reweighed.

Weigh enough laboratory blanks to provide at least 10% or at least one laboratory blank during the post sampling weighing session. Also, weigh enough field blanks to meet 10% or at least one field blank during the post weighing session.

Weigh each filter on the microbalance. Follow the microbalance manufacturer's operations manual for proper operation of the microbalance. The filters should be handled with forceps and only held by the right. Pass the filter, support ring side up near an antistatic strip for 60 seconds before weighing. Immediately transfer the filter to the microbalance for weighing. Record the filter ID, lot number and tare-weight (pre-weight).

After every 10 filters, reweigh one of the standards and record the data. These standards should be within 3µg. Also reweigh one of the 10 filters. It must be within 15µg of its original weight.

After all the filters are weighed, both working standards should be reweighed and must be within 3µg of their standard. Also one random filter of the total should be reweighed and it must be within 15µg of its original weight.

DRAFT

NOTE: Any unexposed filter whose weight is outside the range of the manufacturer's specifications should be discarded and investigated as to why.

Check the filter cassettes for cracks, evidence of wear, dirt and contamination. Cassettes can be cleaned in the dishwasher and rinsed with deionized water. Thoroughly dry the cassette before use. Filters must be used within 30 days of being pre-weighed. Install each filter into the filter cassette and place the cassette into its protective container and then into an antistatic bag for field transport and use.

4.9 Field Sample Handling

Remove the filter cassette from the antistatic bag and protective tin. Ensure the filter holder is open and place the filter cassette with filter into the filter holder. Close the filter holder and set the sampler for the appropriate sample date and time. At the completion of the sampling event, the filter must be collected within 4 days (96 hours) of the end of the run. The filter cassette should be carefully removed from the filter holder, placed into the protective tin with the particulate side upwards and then placed in an anti-static bag.

NOTE: The filter should never be touched. When handling the cassettes, make sure your hands are clean and if gloves are worn, ensure they are anti-static and powder-free.

Place the filter cassettes (in the tins and anti-static bags) into an insulated container such as a small cooler for storage. Use 'blue-ice' packs or frozen gel packs to achieve temperatures below 4ºC. Place a small min/max recording thermometer into the cooler to verify that the samples remained cool during transport to the laboratory.

The sample must be placed back into the conditioned laboratory and weighed within 10 days if stored below 25ºC. If stored below 4ºC, it is 30 days from the end of the run that the filter must be placed back into the laboratory and weighed.

NOTE: Any filter that is noticeably torn or has a hole in it should immediately be invalidated and investigated on what caused the problem.

DRAFT

4.10 Filter Post-Conditioning and Weighing

NOTE: For PM_{10} and $PM_{2.5}$ sampling, refer to *EPA QA Guidance Document 2.12 – Monitoring $PM_{2.5}$ in Ambient Air Using Designated Reference for Class I Equivalent Methods* for information on filter weighing, conditioning and microbalance standards.

Conditioning of exposed filters

The lab technician who receives and logs in the sample shipment must verify that the shipment was maintained at below 25ºC for less than 10 days or less than 4ºC for less than 30 days of the filters being in the field.

The lab technician will also receive the data recorded from all the site samplers and any paperwork relating to the sample.

Remove the filter cassette containers from the cooler / freezer and allow each filter cassette container to warm to room temperature. After the containers warm to room temperature open each container to begin the filter equilibration process. During conditioning place the lid of the container partially over the opening so it is partially open. Inspect for any tears, holes or anomalies of the filter that may have occurred during sampling and note this and flag it for further analysis.

Using the Filter Cassette Removal Tool (TE-W-400)

Place the filter cassette removal tool on a flat surface. Grab the filter cassette and push into the opening carefully.

DRAFT

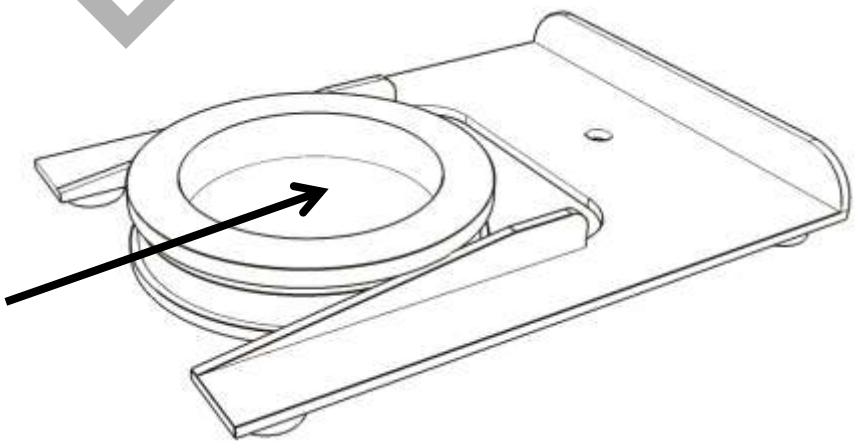

This will separate the top and bottom halves of the filter cassette.

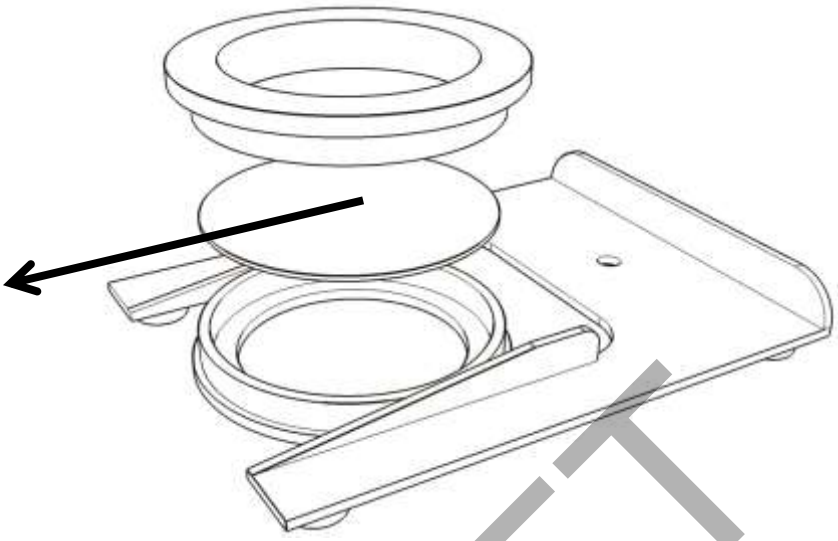

Remove the filter carefully with forceps being careful to only handle the filter by the ring. Place the filter with the dirty-side up into a filter-handling container or petri dish with the corresponding filter ID.

Remove the cassettes and screens from the conditioning area to another area for cleaning.

Allow the filters to condition for at least 24 hours.

Weighing of exposed filters

The filters must be weighed in the same room as they were conditioned in. Record the %RH and temperature and verify the mean temperature and %RH for the last 24 hours has remained between 20-23ºC (with instantaneous readings within ±2ºC) and 30-40% RH (with instantaneous readings within ±5%RH.

Using clean forceps two working mass reference standards must be weighed as a QC check such as 100mg and 200mg. Record these weights. If these disagree by more than 3µg they must be reweighed.

Weigh enough laboratory blanks to provide at least 10% or at least one laboratory blank during the post sampling weighing session. Also, weigh enough field blanks to meet 10% or at least one field blank during the post weighing session.

DRAFT

Weigh each filter on the microbalance. Follow the microbalance manufacturer's operations manual for proper operation of the microbalance. The filters should be handled with forceps and only held by the support ring. Pass the filter, support ring side up near an antistatic strip for 60 seconds before weighing. Immediately transfer the filter to the microbalance for weighing. Record the filter ID, lot number and tare-weight (pre-weight).

After every 10 filters, reweigh one of the standards and record the data. These standards should be within 3µg. Also reweigh one of the 10 filters. It must be within 15µg of its original weight.

After all the filters are weighed, both working standards should be reweighed and must be within 3µg of their standard. Also one random filter of the total should be reweighed and it must be within 15µg of its original weight.

4.11 Calculating Mass Concentrations

The total sample volume can be calculated from the sample which is located on the sample completed screen. If the total volume is not available it can be calculated using the following formula:

$$V_a = \frac{(Q_{avg})(T)}{16.67}$$

Where: V_a = total sample volume (m^3)
Q_{avg} = average sample flow rate (Lpm)
T = total sample time (hours)
16.67 = conversion to m^3/hr

Using the pre and post sample filter weights, the total filter mass gain can be found by the following formula:

$$M_{delta} = (M_{post} - M_{pre})$$

Where: M_{delta} = total mass gained during sampling in µg
M_{post} = post sample weight in µg
M_{pre} = pre sample weight in µg

DRAFT

The total concentration of particulate can then be calculated using the following formula:

$$PM_x = \frac{M_{final}}{V_a}$$

Where: PM_x = concentration of $PM_{2.5}$ or PM_{10} particulates in µg/m^3
V_a = total volume of the sample

4.12 Data Validation

The sample run data should be verified by the following criteria:

- Average volumetric flow rate = 16.7 L/min ± 5%.
- Flow rate coefficient of variation less than 4%.
- Temperature difference (filter – ambient) less than 5ºC.
- Sample Time is greater than 23 hours and less than 25 hours.
- Verify that the sample data sheet the technician filled out does not indicate an invalid sample or that there were warnings or alarms during the sample.
- Verify that the sample was retrieved within 4 days (96 hours) of the completion of the sample run.
- Verify that the container holding the filters did not exceed 25ºC during transport to the laboratory.
- Verify that filter was used within 30 days if kept at 4ºC or below, or 10 days if kept below 25ºC.
- Verify that the barometric pressure, filter temperature and ambient temperature were reading appropriately on the datalog and were not out of specifications or varied widely throughout the sample.
- Verify that there were not more than 10 power losses during the sample period or any other alarms that would invalidate the sample.

DRAFT

5.0 PM_{10} Inlet / $PM_{2.5}$ Cyclone

This section describes the TE-PM10 inlet and the TE-PM2.5C $PM_{2.5}$ cyclone fractionator.

5.1 TE-PM10 Inlet

The TE-PM10 inlet is a 10 micron particulate fractionator. Below is a cut-away view of the TE-PM10.

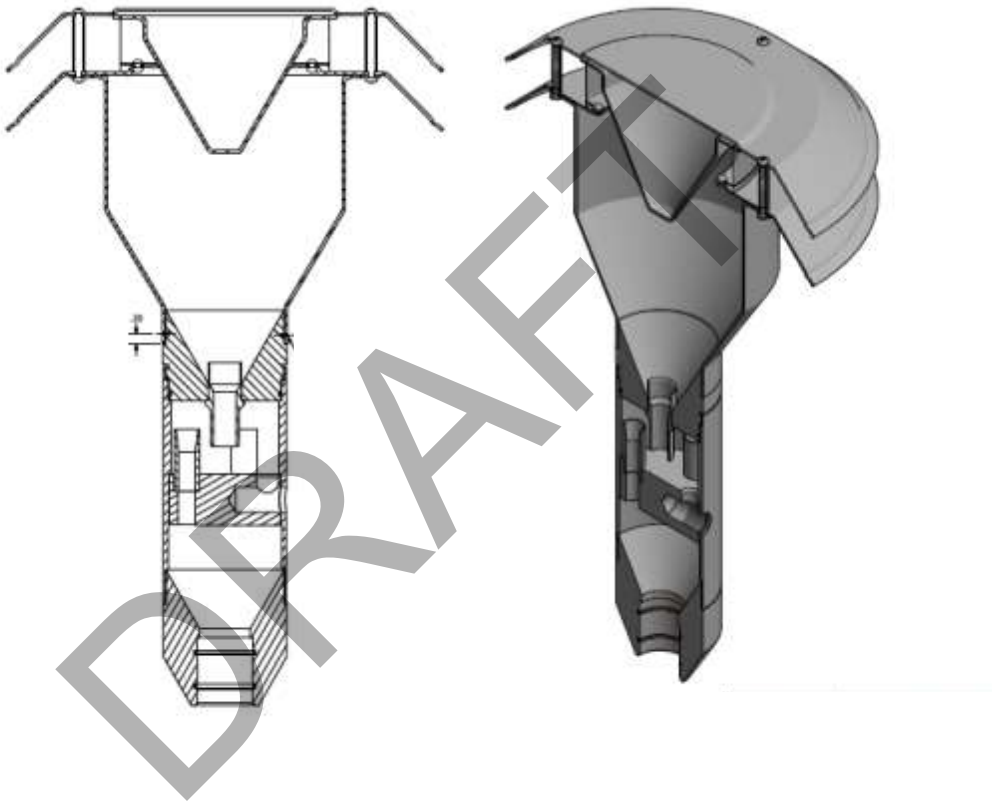

Ambient air is pulled in through the top of the inlet and particles that have aerodynamic diameters greater than 10um are impacted on the inside plate of the unit. The particles that have less than 10um of aerodynamic diameter are expelled at the bottom, onto the next stage.

The following shows the airflow path through the TE-PM10 Inlet.

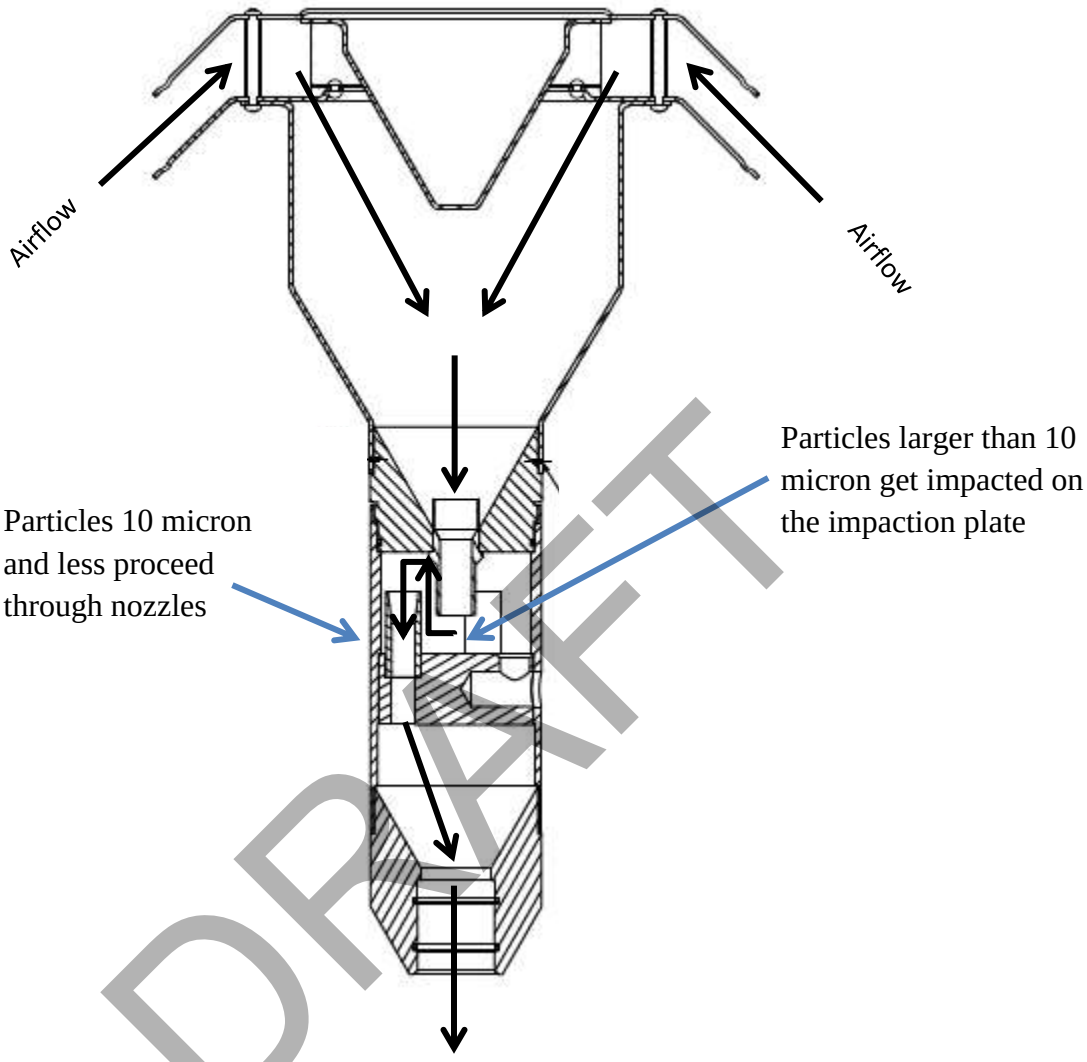

DRAFT

5.2 Cleaning the PM_{10} Inlet

USEPA *Quality Assurance Guidance Document 2.12, Monitoring $PM_{2.5}$ in Ambient Air Using Designated Reference or Class I Equivalent Methods* suggests the PM_{10} inlet must be cleaned every 4 weeks. To clean the TE-PM10 Inlet, perform the following:

1. Remove the glass jar and empty any water.
2. Place the jar aside.
3. Remove the PM_{10} inlet from the sampler and place on flat surface.
4. Unscrew the lower piece from the upper piece.
5. Using cotton swabs, q-tips and distilled water or general purpose cleaner, clean the impactor plate and the nozzles.

6. Using a soft brush, cloth and cotton swabs, lightly scrub all interior surfaces and the bug screen with distilled water and / or general purpose cleaner.
7. Check the o-ring around the upper unit that seals the upper and lower pieces for wear and damage. Replace if worn or damaged
8. Check the 2 o-rings in the bottom of the inlet for wear and damage. Replace if worn or damaged.
9. Place a small amount of o-ring grease around the o-ring that seals the upper and lower units.
10. Screw the upper and lower unit back together carefully.
11. Place a small amount of o-ring grease around the 2 o-rings on the bottom.
12. Screw the jar back into the inlet and place the inlet back onto the downtube.

The PM_{10} Inlet has the following O-rings that should be inspected for wear and replaced as needed.

Quantity	Description	Part Number
2	Exit Adapter O-Rings	TE-W-022
1	Impactor Nozzle O-Ring	TE-W-023
2	Downtube O-Rings	TE-W-021

These can also be ordered together in a kit by part number TE-W-020.

There are also O-rings located in the black downtube adapter and those can be ordered using part number TE-W-024.

5.3 TE-PM2.5C Cyclone

The TE-PM2.5C is a $PM_{2.5}$ particle fractionator that utilizes a cyclonic effect to separate ambient particles that have an aerodynamic diameter less than 2.5um. The cyclone is placed directly underneath the PM_{10} inlet to achieve $PM_{2.5}$ collection.

DRAFT

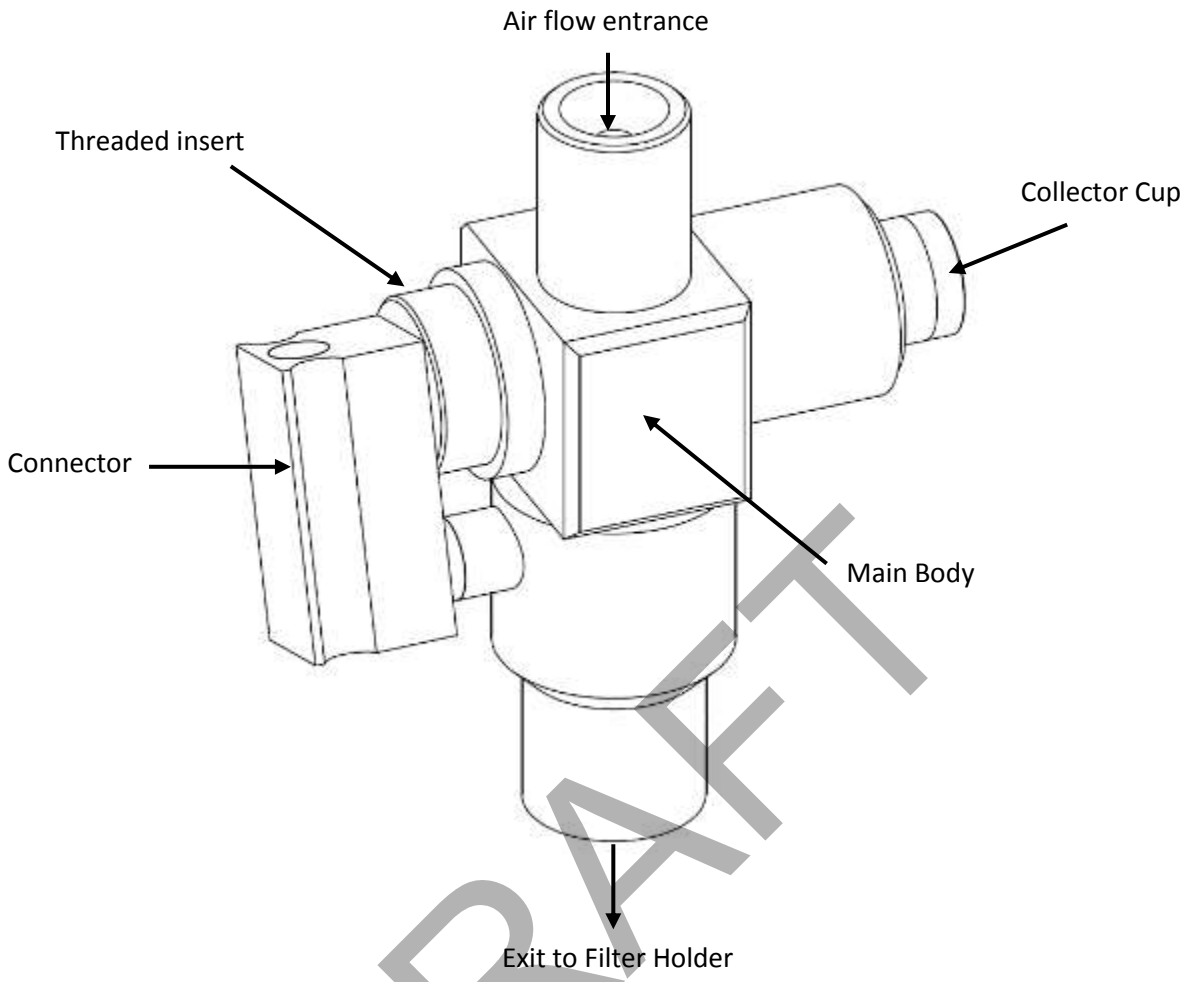

DRAFT

5.4 Cleaning the TE-PM2.5C Cyclone

The following describes how to clean the TE-PM2.5C Cyclone.

1. Remove the cyclone from the sampler by pulling the downtube up and pulling the cyclone off of the top of the filter holder.
2. Place on a flat surface.
3. Unscrew the collector cup and wipe out the inner body with a lint-free laboratory wipe. Distilled water or general purpose cleaner can be used if the inner body is very dirty.
4. Wipe the inside of the collector with a lint-free wipe.
5. Remove the connector by pulling outward.
6. Inspect the o-rings, on the tubes that the connector plugs into, for wear or damage. Replace if worn or damaged.
7. Wipe down the connector and the outside of the tubes.

8. Unscrew the threaded insert.
9. Wipe down the threaded insert and the inside of the body where it inserts into with a lint-free laboratory wipe.
10. Inspect the o-ring on the outer lip of the threaded insert for wear or damage. Replace if worn or damaged.
11. Thread the threaded insert back into the cyclone body.
12. Place a small amount of o-ring grease around the o-rings on the connector tubes.
13. Push the connector onto the tubes.
14. Thread the collector cup back into the body.
15. Wipe out the bottom exit of the cyclone with a lint-free wipe.
16. Place back onto filter holder and push downtube back onto top of cyclone.
17. Ensure to place the PM_{10} inlet back onto unit prior to sampling.

The TE-PM2.5C Fractionator has the following O-rings that should be inspected for wear and replaced as needed.

Quantity	Description	Part Number
2	Exit Nozzle O-Rings	TE-W-031
1	Collector Cup O-Ring	TE-W-032
1	Threaded Insert O-Ring	TE-W-033
2	Connector tube O-Rings	TE-W-034
2	Stainless steel bolt O-Rings	TE-W-035

These can also be ordered together in a kit by part number TE-W-030.

5.5 Placing of the Cyclone and PM_{10} Head

To sample for PM_{10} you would install the downtube onto the top of the filter holder and then the TE-PM10 head onto the top of the downtube.

To sample for $PM_{2.5}$ you would install the TE-PM2.5C onto the top of the filter holder, then the downtube and lastly the TE-PM10 head on top of the downtube.

NOTE: The downtube adapter has o-rings inside of it to prevent water from entering the enclosure. Ensure these o-rings are greased when removing and installing the downtube.

DRAFT

6.0 Sample Setup

The sample setup menu allows you to setup the sampler to run on standard US EPA schedules for 1 in 3 day sampling, 1 in 6 day sampling and 1 in 12 day sampling for 24 hours, midnight to midnight. Also, a custom sample can be setup that will start and stop the sampler at a specific date and time.

6.1 Site and Filter ID

The Site ID and Filter ID can be entered by pressing the 'Enter Filter and Site ID' button located in the Sample Setup Menu. The Site ID and Filter ID can be up to a 10 digit number, with no alpha-numerical characters allowed.

MAIN MENU ➔ **SAMPLE SETUP** ➔ **ENTER SITE AND FILTER ID**

Filter and Site ID Screen

DRAFT

6.2 USEPA Sample Setup

The USEPA standard schedules of a 1 in 3, 1 in 6, or 1 in 12 day sample schedule can be easily programmed in the sample setup menu. This example uses the 1 in 3 day schedule. To setup a 1 in 6 or 1 in 12 the procedure is the same. When setting up an USEPA sample, the system is color coded to somewhat match the US EPA schedule found at:

http://www.epa.gov/ttnamti1/calendar.html.

The 1 in 12 schedule will be shown purple, The 1 in 6 will be shown in green and the 1 in 3 sample schedule will be shown in orange.

The 1 in 3 sample setup is found here:

MAIN MENU	➔	SAMPLE SETUP	➔	SET TO SAMPLE 1 in 3 DAYS

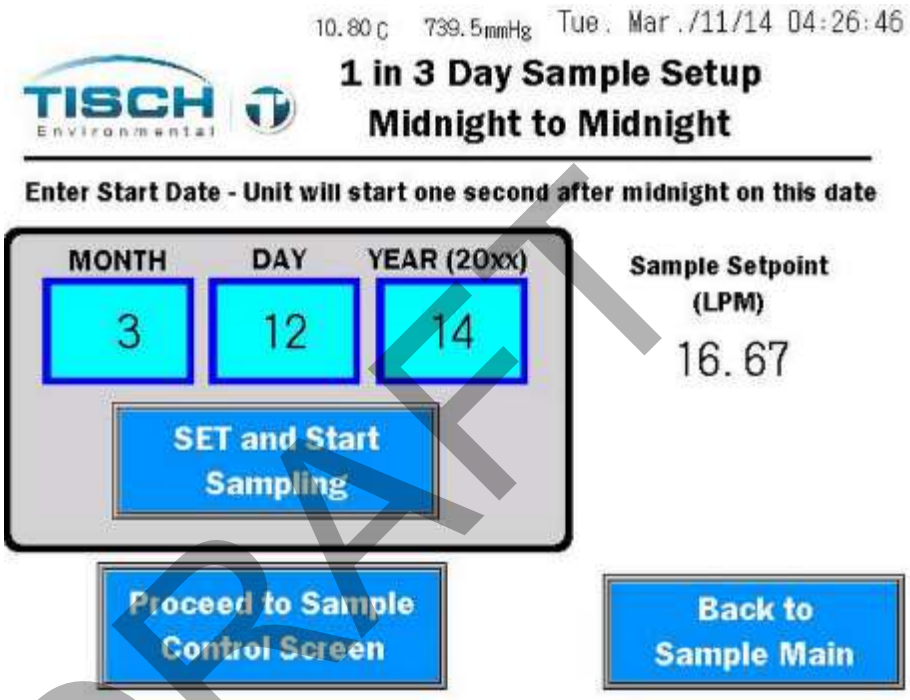

DRAFT

On this screen you have the ability to set a start Month / Day / Year. The system will not allow you to enter a date in the past.

The unit will start on Midnight of the day you enter. So if you enter 2/23/14 and the date is 2/22/14 and the time is 23:59:59, in one second the unit will turn on and sample for 24 hours midnight to midnight.

You also see the setpoint of the sample. This defaults to 16.67 Lpm which is the designed setpoint, so this value should never be changed. See Screen Maintenance section 8.0 to change the setpoint.

After the sample is setup press the **PROCEED TO SAMPLE CONTROL SCREEN** button.

Sample control screen

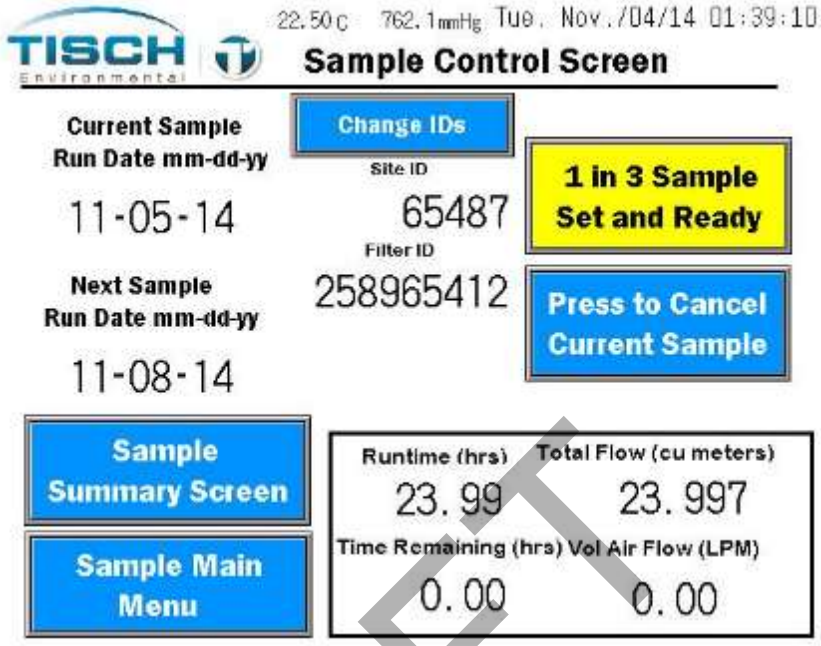

On this screen you have the ability to Cancel the current sample and see all the pertinent sample runtime information such as:

Current Sample Run Date This is the date that the sampler will start running at midnight.

Next Sample Run Date This is the date of the next sample. If the current start date is 2/23/14 and you are running a 1 in 3 schedule, the next sample run date will be 2/26/14.

Runtime This is the actual runtime of the sample. When the sample starts this value is reset to zero. The currently displayed value is the last sample's runtime or the current runtime if the sampler is running.

Time Remaining This is the time remaining of the current sample. When a 24 hour sample starts this value will be 24.

Total Flow This is the total airflow in cubic meters. At 16.67 Liters per minute, 1 cubic meter per hour of air will pass through the sampler. In 24 hours, approximately 24 cubic meters of air will flow through the sampler.

Vol Air Flow This is the actual volumetric flow in Lpm.

DRAFT

The **SAMPLE SUMMARY SCREEN** button will take you to the sample summary screen

Sample summary screen

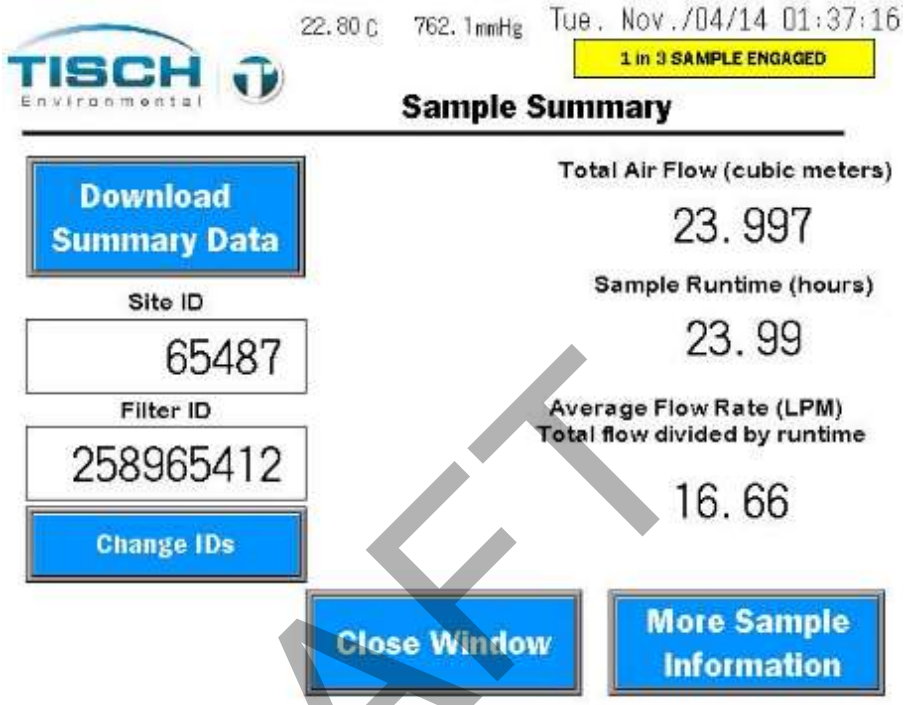

DRAFT

This screen is what appears after a successful sample. The last sample completed screen is a summary of the sample and gives the operator all the pertinent information for the sample such as total air flow, runtime and average flow rate.

NOTE: When a sample is setup to run (Engaged) there will be an indication on every screen at the top. When a sample is running there will also be an indication at the top of each screen.

NOTE: When a sample is running, all features such as changing the date and time, doing a calibration or leak check are disabled. The sample must be canceled if those are necessary.

Press the **MORE SAMPLE INFORMATION** to see more information about the sample that has just completed.

More Sample Information Screen

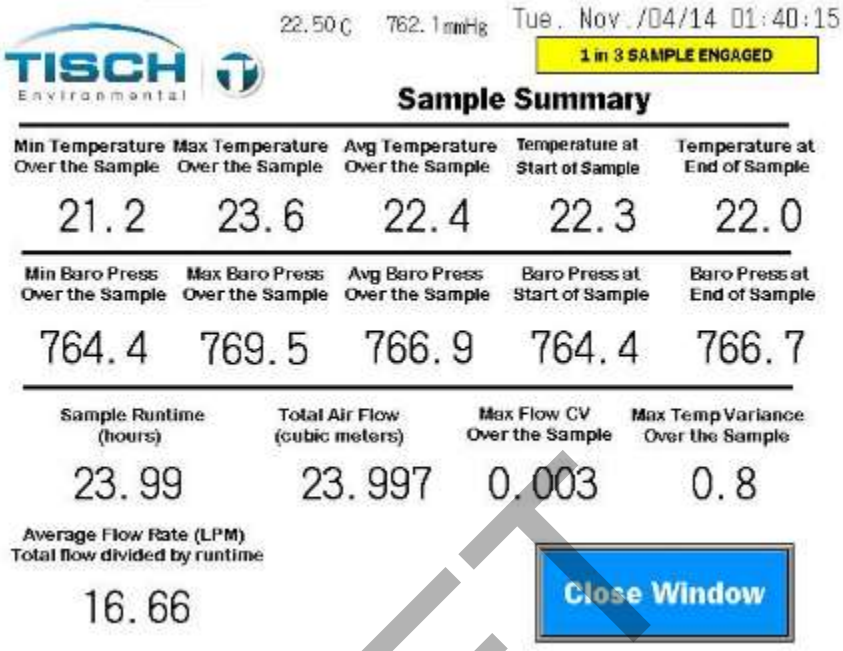

On the more sample information screen the following information is presented to the operator:

Min / Max / Avg Temperature This is the minimum, maximum and average ambient temperature over the entire sample period in degrees Celsius.

Temperature at Start of Sample This is the ambient temperature at the start of the sample in degrees Celsius.

Temperature at End of Sample This is the ambient temperature at the end of the sample in degrees Celsius.

Min / Max / Avg Baro Press This is the minimum, maximum and average barometric pressure over the entire sample period in mmHg.

Baro Press at Start of Sample This is the barometric pressure at the start of the sample in mmHg.

Baro Press at End of Sample This is the barometric pressure at the end of the sample in mmHg.

Max Flow CV This is the maximum flow coefficient of variance over the entire sample.

DRAFT

Max Temp Variance This is the maximum temperature variance between ambient and the filter temperature in degrees Celsius.

Runtime This is the actual runtime of the sample. When the sample starts this value is reset to zero.

Total Flow This is the total airflow in cubic meters. At 16.67 Liters per minute, 1 cubic meter per hour of air will pass through the sampler. In 24 hours it should be 24 cubic meters.

Average Flow Rate This is the total flow in Lpm divided by the runtime to derive the average flowrate over the sample period.

6.3 Custom Sample

A custom sample can be setup that allows the operator to enter a start Month / Day / Year / Hour / Minute and duration in Hours / Minutes. The sampler will start on the date entered and run for the duration of the runtime entered. The system does not allow the user to enter a date in the past.

The custom sample can be found here:

MAIN MENU ➔ **SAMPLE SETUP** ➔ **SET CUSTOM SAMPLE**

All alarms associated with shutting down a sample, datalogging and all features of the USEPA standard samples are associated with the custom sample.

When a custom sample is engaged, all screens will show a blue box indicating that a custom sample has been setup and engaged. When a custom sample is running a green box will show on all screens that a sample is running.

NOTE: Once a custom sample stops, it will not reoccur. It is a one-time sample.

6.4 Canceling a Sample

To cancel a sample, press the PRESS TO CANCEL CURRENT SAMPLE button located on the sample control screen. A popup will appear asking if you are sure you would like to cancel the current sample. Press YES to cancel or NO to return to the sample control screen.

DRAFT

NOTE: Once a sample is canceled, it must be setup again in the sample setup menu. If the sampler is set for a 1 in x sample schedule and the sample is canceled, the 1 in x sample schedule must be reconfigured in order for the sampler to run again.

NOTE: If the sampler is set for a 1 in x sample and the date is changed to the future, the sample will be automatically cancelled and must be setup again. Also, if there is an extended power fail and if the 1 in x sample is missed, it will cancel the sample and the sample must be setup again.

6.5 Sample Alarms

When a sample is running, there are certain events, or alarms, that will shut down a sample per USEPA specifications. There are also events that do not shut down the sample, but will be logged in the history log and are called Warnings.

When an alarm shuts down the sample, the history log will automatically appear alerting the operator that there has been an alarm and the sample has been shut down.

The following alarms will shut down a sample:

Shutdown Sample Alarms	
Flow	Alarms when flowmeter is unplugged, goes over range (25 Lpm) or the electronics detects an internal problem with the sensor.
Barometric Pressure	Alarms when barometric pressure board is unplugged, if the pressure falls below 550mmHg, the pressure goes above 850mmHg or if the electronics detects an internal problem with the sensor.
Ambient Temperature	Alarms when the temperature drops below -90 Degrees Celsius, goes above 60 Degrees Celsius, is unplugged or the electronics detect an internal problem with the sensor.
Filter Temperature	Alarms when the temperature drops below -90 Degrees Celsius, goes above 60 Degrees Celsius, is unplugged or the electronics detect an internal problem with the sensor.

DRAFT

10% Flow Variance When a sample is running and the flow varies by 10% or more for 10 minutes, the sample will shut down.

High System Pressure When the internal pressure of the system exceeds 200 inches of H_2O it will shut down the sample and alarm.

10 Power Failures When a sample is running and 10 consecutive power fails occur, it will shut down the sample and active the alarm.

There are also warnings associated with a sample. A warning will not shut down the sample and will allow the sample to complete. A warning will alert the operator that a warning has occurred and to check the history log.

Warnings that do not shut down a sample

5% flow variance When a sample is running and the flow varies by 5% or more for 5 minutes, the system will log the event in the history log.

Power Failure A power fail will be logged in the history log.

Sample Time When a sample completes and the sample runtime is less than 23 hours or more than 25 hours it will log the event in the history log.

Temperature Variance If the ambient temperature and the filter temperature vary by more than 5 Deg C for 30 minutes.

NOTE: When a warning appears on the screen and is logged in the history log it must be acknowledged. If it is not acknowledged by the operator it will continue to be active in the history log and will continue to show on the sample completed screen.

DRAFT

6.6 More Sampling Information

The TE-Wilbur system has the ability to store the last (5) samples that occurred into the system. The oldest sample will be number 5 and the newest sample will be number 1. The oldest will get discarded as a new sample has completed. This information is updated after the sample has completed and can be found by the following keystrokes:

MAIN MENU ➔ **SAMPLE SETUP** ➔ **SAMPLE INFORMATION**

6.7 Other Sampling Features

When a sample has started, the following features are disabled:

Maintenance Menu
System Calibration Menu
Perform Leak Checks Menu

If the operator is performing a calibration, leak check or is running the system in manual mode, those will be terminated and the sample will take precedence and will start automatically.

When a sample is started, the sample control screen is automatically displayed.

When a sample is completed, the sample completed summary screen will be automatically displayed.

When a power fail occurs, on re-power the sampler will start sampling again as long as the sample time is within the time the operator has set it to.

DRAFT

7.0 Calibration

The Calibration menu is where the sensors for flow measurement, ambient temperature, filter temperature and barometric pressure can be verified and calibrated.

7.1 Ambient Temperature Calibration

The ambient temperature sensor is a highly accurate PT100 RTD (resistive temperature device). The ambient temperature sensor can be found inside the radiation shield, which is bolted to the left side of the enclosure.

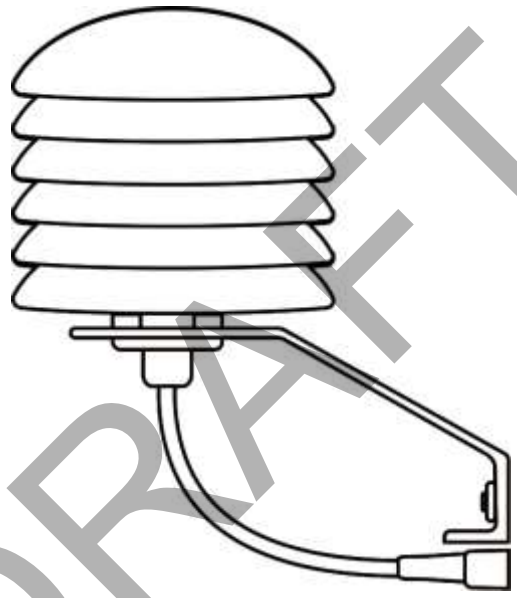

DRAFT

To calibrate the ambient temperature sensor perform the following:

1. Obtain a calibrated temperature device such as the Tisch FRM-CAL low volume calibration system.
2. Allow the calibrated temperature device to reach equilibrium with the ambient air and take a reading on the calibrated temperature device.
3. The temperature calibration can be performed by following these keystrokes:

MAIN MENU	➔	CALIBRATION	➔	AMBIENT TEMPERATURE CALIBRATION

4. Press the box and enter the temperature reading from the calibrator.
5. Press UPDATE to update the temperature.

Ambient Temperature Calibration Screen

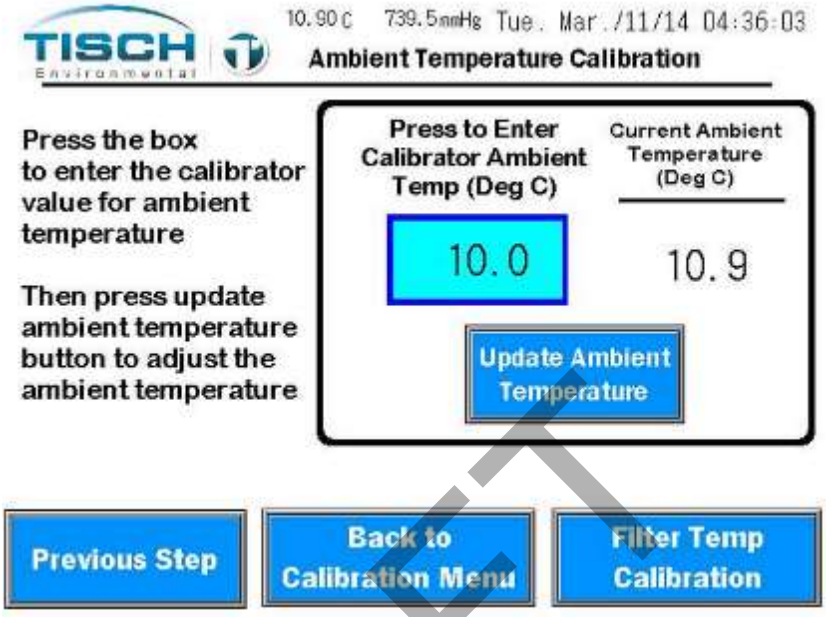

7.2 Filter Temperature Calibration

The Filter temperature sensor is a highly accurate PT100 RTD (resistive temperature device). The filter temperature sensor can be found inside the filter temperature thermo well which is on the front of the filter holder. The filter temperature RTD can be removed and inserted from the thermo well by screwing and unscrewing it. The thermo well is secured tightly into the filter holder body and provides a sealed fitting. Tightening the RTD into the thermo well is not important to seal the system so it can be tightened finger-tight into the thermowell.

DRAFT

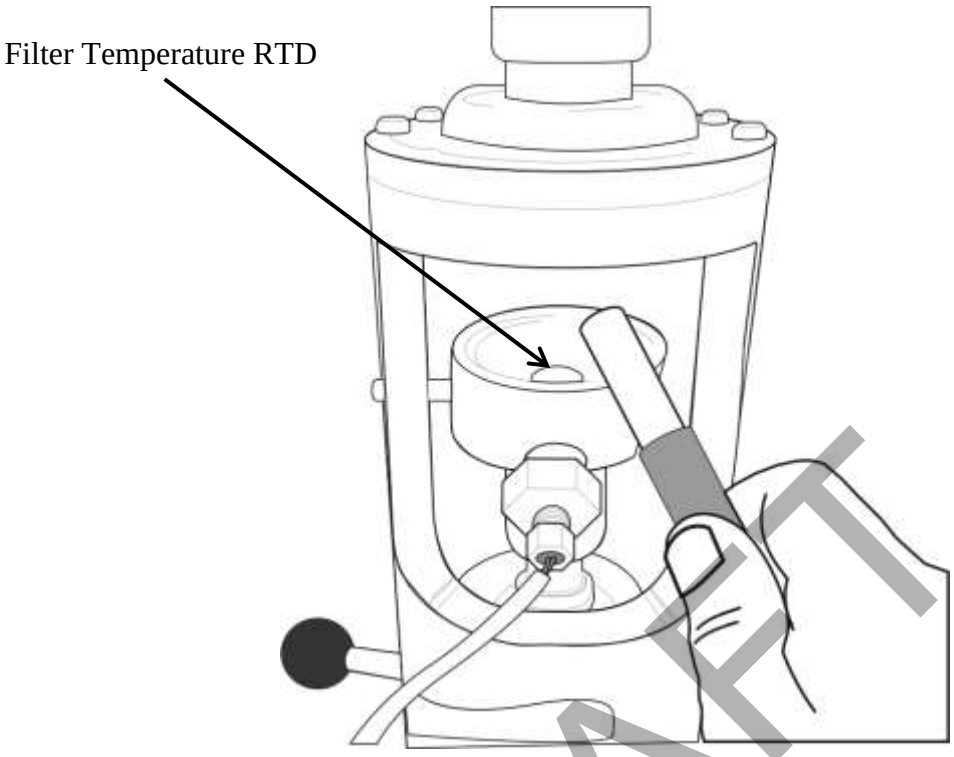

To calibrate the filter temperature sensor perform the following:

1. Obtain a calibrated temperature device such as the Tisch FRM-CAL low volume calibrator.
2. Allow the calibrated temperature device to reach equilibrium with the ambient air.
3. Place the temperature device into the filter holder holding it at the tip of the filter temperature RTD.
4. The temperature calibration can be performed by following these keystrokes:

MAIN MENU	➔	**CALIBRATION**	➔	**FILTER TEMPERATURE CALIBRATION**

5. Press the box and enter the temperature reading from the calibrator.
6. Press UPDATE to update the temperature.

DRAFT

Filter Temperature Calibration Screen

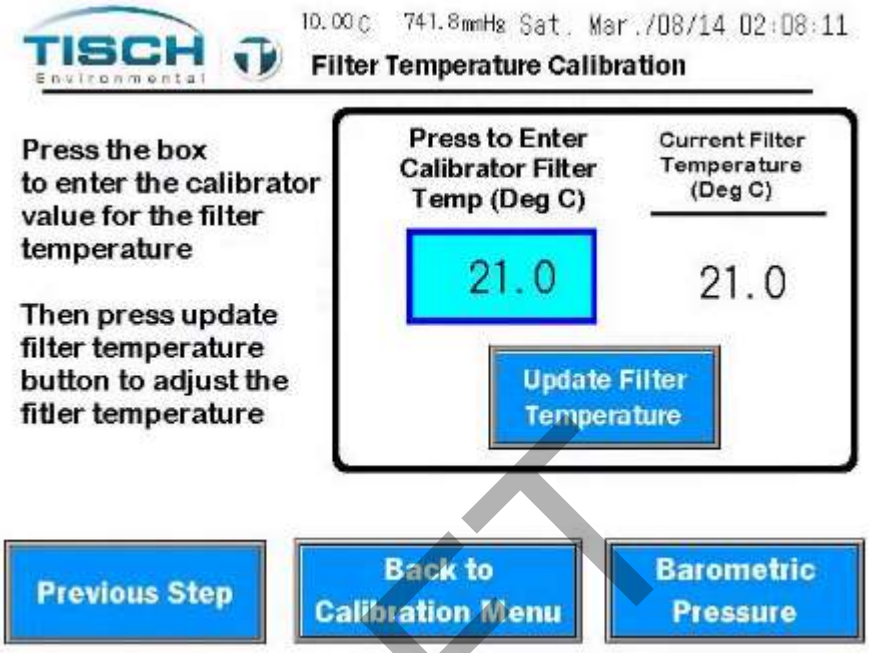

7.3 Barometric Pressure Calibration

The barometric pressure sensor is a highly accurate electronic sensor that is mounted inside the enclosure. Since pressure is equalized from inside the enclosure to outside the enclosure, measuring the barometric pressure outside of the enclosure will suffice.

To calibrate the barometric sensor perform the following:

1. Obtain a calibrated barometric device such as the Tisch FRM-CAL low volume calibrator.
2. Allow the calibrated barometric pressure device to reach equilibrium with the ambient air.
3. The barometric calibration can be performed by following these keystrokes:

MAIN MENU	➔	CALIBRATION	➔	BAROMETRIC PRESS CALIBRATION

4. Press the box and enter the pressure reading from the calibrator.
5. Press UPDATE to update the barometric pressure.

DRAFT

Barometric Pressure Sensor Calibration Screen

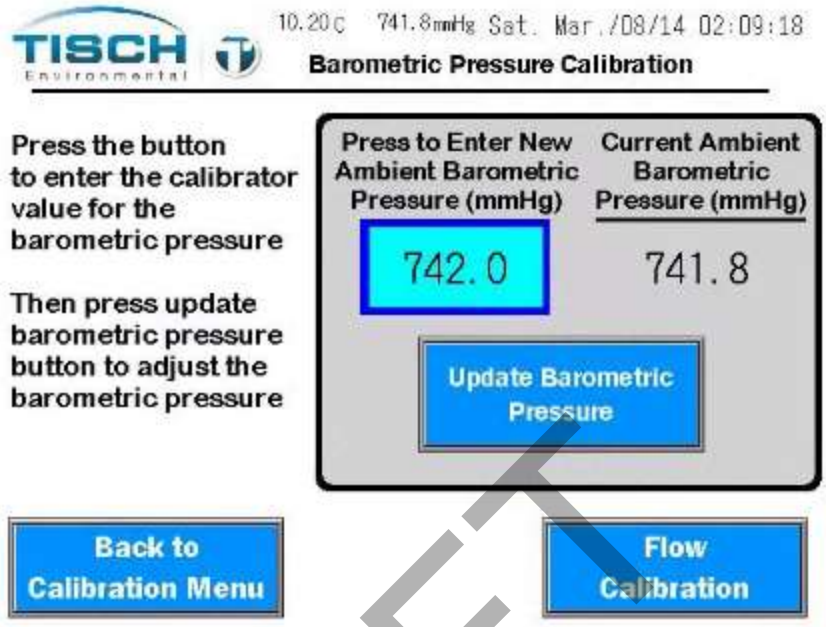

7.4 Volumetric Flow Calculation

The TE-Wilbur uses a highly accurate mass flow sensor to measure the mass flow of the flow system. The system then calculates the actual volumetric flowrate using the following formula:

$$Q_a = Q_s \, x \left(\frac{P_s}{P_a}\right) x \left(\frac{T_a}{T_s}\right)$$

Where:
Q_a = Actual Flow or Volumetric Flow in Lpm
Q_s = Mass flow
P_s = Standard USEPA Barometric Pressure = 760 mmHg
P_a = Actual Barometric Pressure Conditions in mmHg
T_s = Standard USEPA ambient Temperature = 298.15 Deg K
T_a = Actual ambient Temperature Conditions in Deg K

Rewriting:

$$Q_a = Q_s \, x \left(\frac{760}{P_a}\right) x \left(\frac{T_a + 273.15}{298.15}\right)$$

Where: T_a is now ambient temperature in Degrees Celsius.

DRAFT

Rewriting:

$$Q_a = Q_s \; x \; 2.549 \; x \; \left(\frac{T_a + 273.15}{P_a}\right)$$

Where: Q_a is the flow in Lpm, T_a is ambient temperature in Degrees Celsius and P_a is ambient barometric pressure in millimeters of mercury.

7.5 Flow Calibration

Flow calibration is performed using a four-point linear regression formula. Four points of flow are generated at 90% / 95% / 100% / 105% of setpoint. When flow calibration is started, the system automatically will start the flow system and will achieve each setpoint, allowing the user to enter the calibrator's flow reading at each step.

To calibrate the flow system, perform the following:

1. Flow calibration can be performed by following these keystrokes:

MAIN MENU ➔ **CALIBRATION** ➔ **FLOW CALIBRATION**

2. Place a known, calibrated flow standard onto the downtube of the TE-Wilbur unit such as the Tisch FRM-CAL low volume calibrator. This calibrator should be within its certification period.

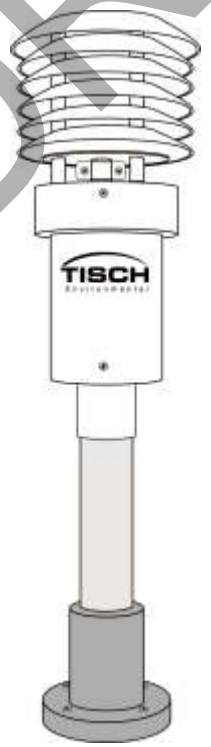

Picture showing the TE-FRM-CAL calibration head inserted onto downtube

DRAFT

3. Place a filter cassette with a screen and filter into the filter holder and close the filter holder. NOTE: this filter cannot be used for subsequent sampling per USEPA Quality Assurance Guidance Document 2.12.
4. Proceed to the setpoint screen where the user can change the setpoint of the flow calibration. 16.67 Lpm is the default setpoint and should only be changed under abnormal operations.

Flow Calibration Setpoint Screen

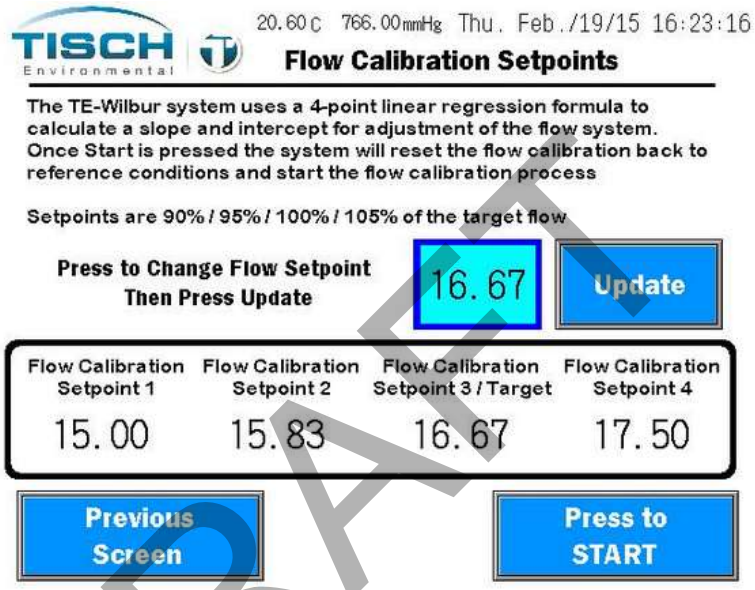

DRAFT

5. Press START and the Calibration Point 1 screen will be displayed and the flow system will start and will achieve the first setpoint. The setpoint and flow is shown on the left.

Flow Calibration Enter Reading Point 1 Screen

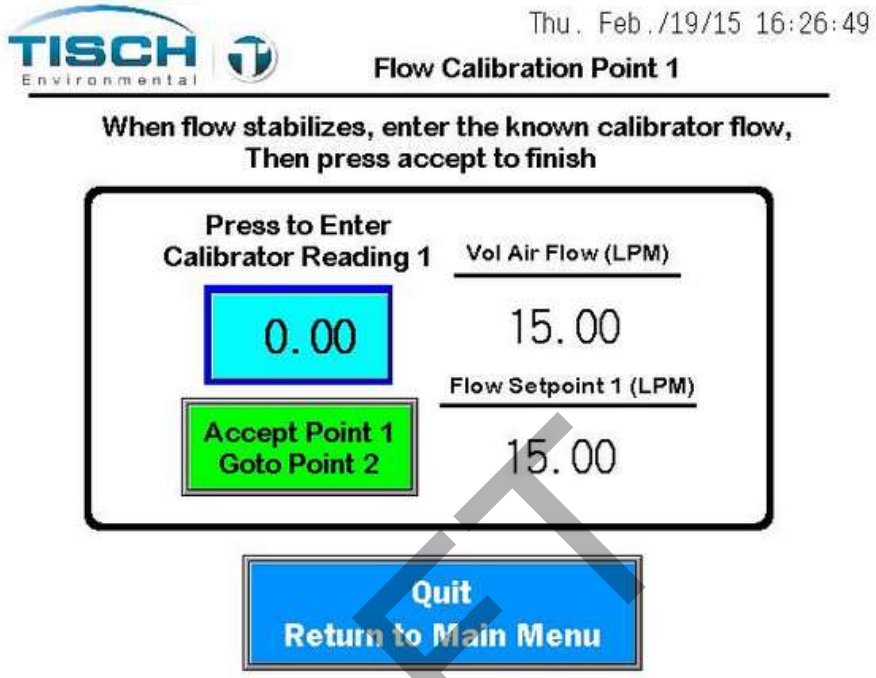

6. After the flow stabilizes, take a reading from the calibrator and press the blue box to enter the calibrator's reading.
7. Press the green ACCEPT box to accept that reading and continue to setpoint number two.
8. Perform setpoints two, three and four. After the fourth setpoint the final flow calibration screen will appear.

NOTE: If the **QUIT RETURN TO MAIN MENU** Button is pressed on any of the screens, the last successful calibration slope and intercept will be loaded into the flow calibration settings and the calibration will be terminated.

DRAFT

Flow Calibration Summary Screen

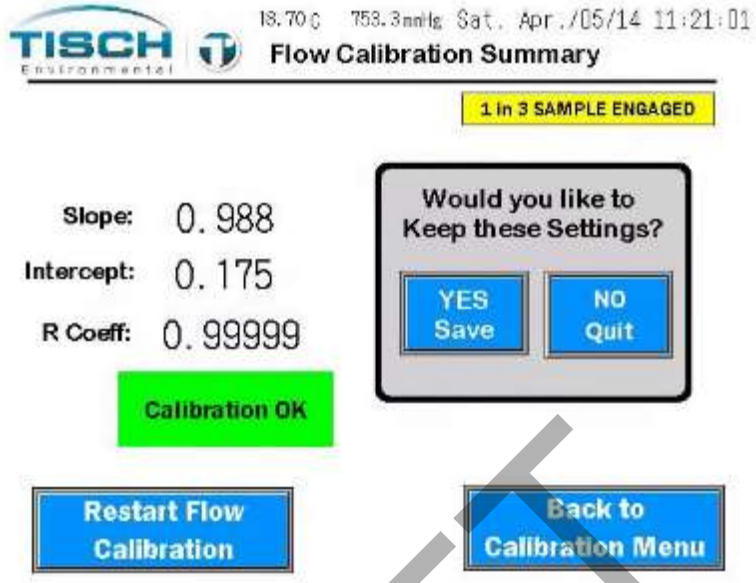

9. The user is presented with the slope, intercept and R coefficient of the four point linear regression formula. If the R coefficient is less than 0.98 the user is notified that the calibration needs attention.
10. If the R coefficient is greater than 0.98 and the user feels that the calibration was successful they can save the calibration values by pressing the YES SAVE button. If the user does not want to save the calibration settings they can press NO QUIT and the last calibration values will be used for flow adjustment.

7.6 Flow Calibration Equations

Linear Regression is a mathematical way to find the relationship between several variables. In the case of flow calibration, you are trying to find the relationship between what the calibrator is reading and what the flow sensor is reading you are trying to calibrate.

A straight regression line depicts a linear trend or relationship of the data. So the linear straight line equation of $y = mx + b$ holds true. This means that you can calculate any point along the line given the reading of your sensor after this formula has been created. Where m = the slope of the linear line and b = the intercept of the line. The flow sensor is a linear relationship.

To calculate the slope of the line the following formula is used:

DRAFT

$$Slope = \frac{\sum xy - \frac{(\sum x)(\sum y)}{n}}{\sum x^2 - \frac{(\sum x)^2}{n}}$$

Where n = the number of data points
y = flow calibrator values
x = sampler flow values

To calculate the intercept of the line the following formula is used:

$$Intercept = \frac{\sum y}{n} - m\frac{\sum x}{n}$$

Where m = the slope calculated above

The flow can then be adjusted using the following formula:

$$Q_{adjusted} = Q_{actual}\ x\ Slope + Intercept$$

Correlation Coefficient (r) - the closer this value is to 1.0 the better fit of the regression line. Simply put, the closer the line passes through all the points and the more accurate it is. A value of 1.0 is a perfect Correlation Coefficient any value less than 0.98 fails a calibration.

The Correlation Coefficient (r) is calculated by the following formula:

$$r = \frac{n\sum xy - (\sum x)(\sum y)}{\sqrt{n(\sum x^2) - (\sum x)^2}\ \sqrt{n(\sum y^2) - (\sum y)^2}}$$

DRAFT

7.7 Flow Calibration Audit / Verification

The flow system can be verified for audit purposes by these keystrokes:

MAIN MENU	➔	CALIBRATION	➔	FLOW CALIBRATION CHECK

To verify the flow calibration

1. Each flow setpoint has a corresponding START button below it. Press each start button to have the flow system reach that flow setpoint.
2. Let the flow stabilize at that setpoint and compare the reading with a calibrated flow device such as a Tisch FRM-CAL low volume calibrator.
3. Press the STOP button or press the Calibration Main Menu return button to stop the flow verification.

Flow Calibration Check Screen

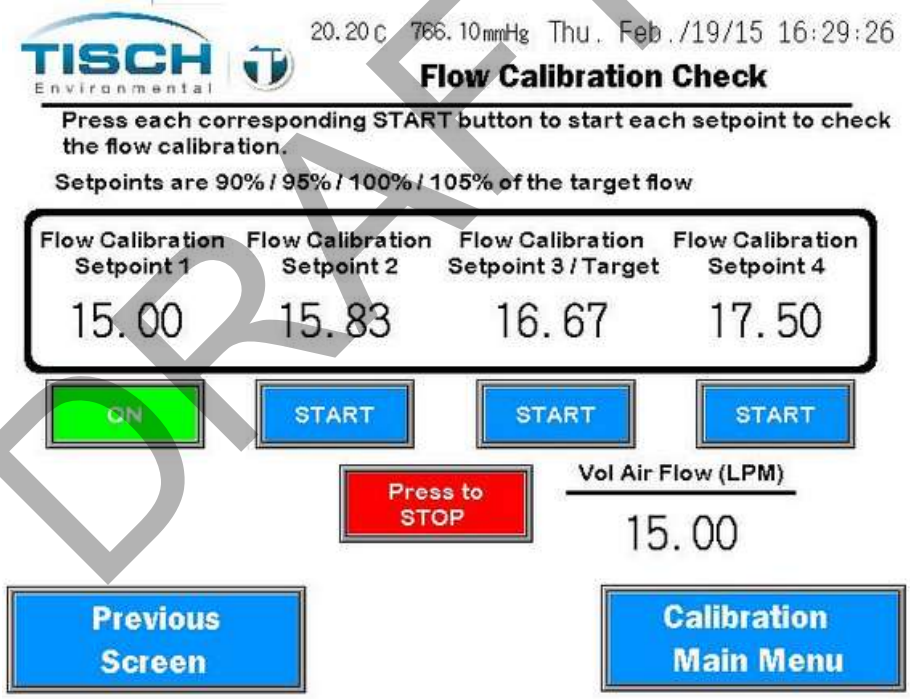

NOTE: Calibration should be checked and verified at a minimum every 4 weeks. If the flow system is off by more than ± 4%, a full calibration should be performed.

DRAFT

7.8 Pressure Sensor Zero Trim

The pressure sensor is zeroed from the factory. If it does require a re-zero, follow these keystrokes:

MAIN MENU	➔	CALIBRATION	➔	PRESSURE SENSOR ZERO TRIM

When zeroing the pressure sensor, make sure there is no pressure on the system. Ensure the pump is not running and the system is vented to atmosphere.

First, press the **RESET PRESSURE SENSOR OFFSET** Button. This will set the offset to zero.

Once the pressure stabilizes, press the 'Pressure Sensor Zero' button to set the system pressure at zero.

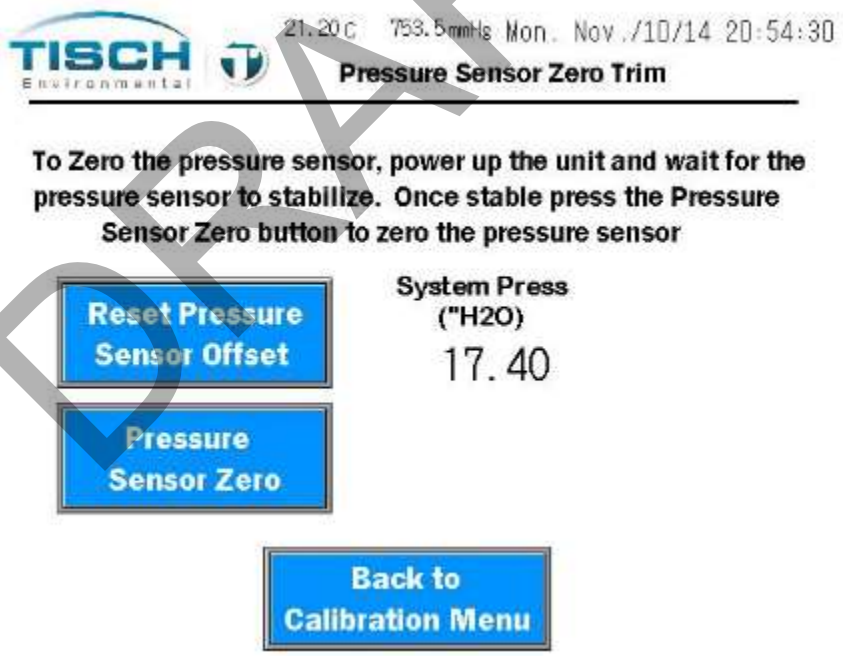

DRAFT

7.9 TE-Wilbur Calibration Worksheet Instructions

1. Fill out the following information in the first box:

Date / Time	Current date and time
Serial Number	Serial Number of the TE-Wilbur unit
Technician	Technician performing the calibration
Calibrator Make/Model	The make and model of the calibrator you are using to perform the calibration
S/N:	The serial number of the calibrator you are using to perform the calibration
Calibrator Due Date	The date the calibrator is due for re-certification, this is typically 1-year after the last certification

2. The second box is the ambient temperature, filter temperature and barometric pressure calibration. Start an ambient temperature calibration. Refer to Section 7.1 of the Operations Manual for performing ambient temperature calibration. Enter the following information:

As Found	The current reading of ambient temperature of the TE-Wilbur system
Calibrator Reading	The current reading of the calibrator ambient temperature
As Left	The value of ambient temperature the TE-Wilbur system was left at. This should always be the calibrator reading

3. Perform a filter temperature calibration. Start a filter temperature calibration. Refer to Section 7.2 of the Operations Manual for performing an filter temperature calibration. Enter the following information:

As Found	The current reading of filter temperature of the TE-Wilbur system
Calibrator Reading	The current reading of the calibrator filter temperature
As Left	The value of filter temperature the TE-Wilbur system was left at. This should always be the calibrator reading

DRAFT

4. Perform a barometric pressure calibration. Start a barometric pressure calibration. Refer to Section 7.3 of the Operations Manual for performing a barometric pressure calibration. Enter the following information:

As Found	The current reading of barometric pressure of the TE-Wilbur system
Calibrator Reading	The current reading of the calibrator barometric pressure
As Left	The value of barometric pressure the TE-Wilbur system was left at. This should always be the calibrator reading

5. The second box is the flow calibration. Start a flow calibration. Refer to section 7.5 of the Operations Manual for performing a flow calibration.

   At each setpoint screen (Setpoints will be 15.00/15.83/16.67/17.50 LPM when running at 16.67 LPM setpoint) record the following values in the Flow Calibration section of the worksheet. Repeat this 4 times for each setpoint

As Found	This is the current reading of the TE-Wilbur flow
Calibrator Reading	This is the current reading of the calibrator
As left	The value of flow the TE-Wilbur system was left at. This should always be the calibrator reading

   After all 4 setpoints are entered and the calibration is successful, write down the Slope, Intercept and R^2 factor in the spaces provided. Perform a flow verification by running the sampler at 16.67 Lpm. Write down the setpoint and the as found value, these should be the same.

6. The last box is the leak check results. Start a leak check. Refer to Section 11.0 of the Operations Manual for instructions on performing a leak check.

   Record the start pressure after the system stabilizes, the fail pressure displayed on the screen and the final ending pressure after the leak check completes. Check the pass or fail box depending if the leak check has passed or failed.

7. Sign and date the calibration worksheet.

DRAFT

TE-Wilbur Calibration Worksheet

145 South Miami Ave. Cleves, OH 45002 513.467.9000 sales@tisch-env.com

Date / Time: _____ Serial Number: _____ Technician: _____

Calibrator Make/Model: _____ Due Date: _____ S/N: _____

AMBIENT TEMPERATURE (°C)

As Found	Calibrator Reading	As Left

FILTER TEMPERATURE (°C)

As Found	Calibrator Reading	As Left

BAROMETRIC PRESSURE (mmHg)

As Found	Calibrator Reading	As Left

FLOW CALIBRATION (Liters Per Minute)

Slope: _____
Intercept: _____
R factor: _____

	As Found	Calibrator Reading	As Left
1			
2			
3			
4			

Calibration Verification:	Setpoint	As Found

LEAK CHECK RESULTS

Leak Check Start Pressure: _____ (inches of H_2O)
Leak Check Fail Pressure: _____ (inches of H_2O)
Leak Check End Pressure: _____ (inches of H_2O)

Leak Check Pass / Fail Pass ☐ Fail ☐

Technician: _____ Date: _____

DRAFT

8.0 Screen Maintenance

The Maintenance Menu allows you to setup the date and time, download data, adjust screen brightness, provide system information, disconnect the battery, control the system manually and several other functions.

8.1 Changing Date and Time

The time format for Wilbur is in 24-hour format, HH:MM:SS. The date format is in the format of MM/DD/YY. To change the date and time follow these instructions.

Changing the time
The Set Time and Date screen can be found by following these keystrokes:

MAIN MENU	➔	MAINTENANCE MENU	➔	SET DATE AND TIME

The set time screen will appear first. To change the time, enter the Hours, Minutes and Seconds and press update. The time will be updated.

Change Time Screen

DRAFT

Changing the date
To change the date, press the CHANGE DATE button which is located on the Update Time Screen.

Press each Month, Day and Year box and press update to update the date. You can return to the Maintenance Menu by pressing the Back to Maintenance Menu button.

Change Date Screen

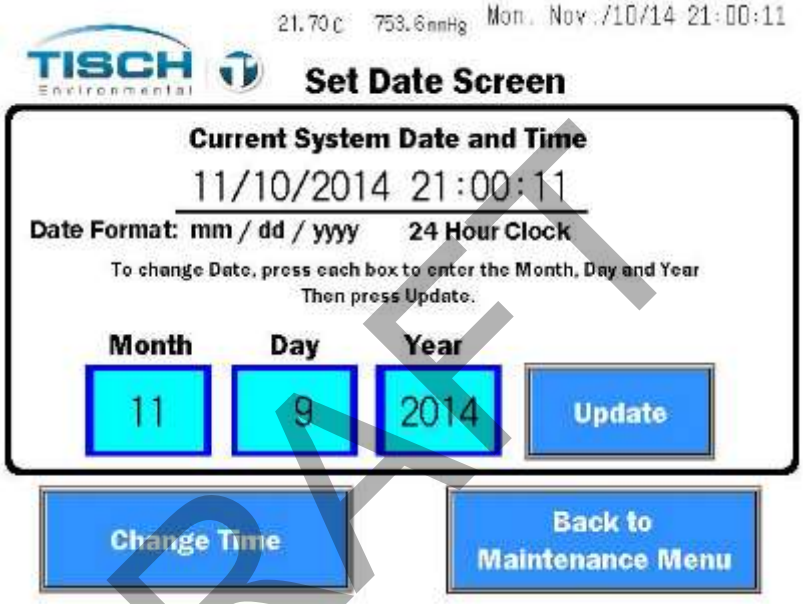

DRAFT

8.2 Change Screen Brightness

To change the screen brightness, under the maintenance menu press the Adjust Screen Brightness button and the following popup screen will be shown. Press the Increase button to increase the brightness and the Decrease button to decrease the brightness.

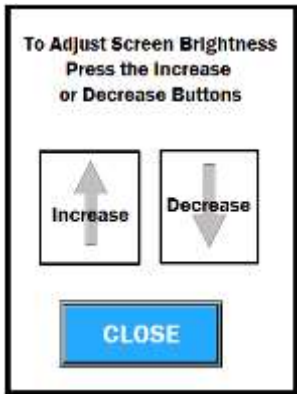

NOTE: After 5 minutes the brightness of the screen in halved and the screen is shutdown after 15 minutes to conserve power.

8.3 Battery Disconnect

In order to power down the sampler the battery must be disconnected before power is removed. To disconnect the battery, press the button that is labeled: **PRESS FOR BATTERY DISCONNECT**.

NOTE: If mains power is removed and the sampler is running on battery, pressing this button will power down the sampler. Mains power must be applied to the sampler to power on again.

8.4 Manual Control

In the manual control screen the system can be operated in automatic flow control mode by entering a flow setpoint or can be operated by adjusting the percent of speed of the pump with no flow control.

The manual control screen is found here:

MAIN MENU ➔ **MAINTENANCE MENU** ➔ **MANUAL CONTROL**

To run the pump with automatic flow control, perform the following:

1. Enter the setpoint by pressing the setpoint box and entering in the flow setpoint for automatic flow control.
2. Press the START button underneath the flow setpoint.
3. The system will turn on and the pump will operate at the desired setpoint.
4. To stop the system press the STOP button below the setpoint box.

Manual Control Screen showing pump in flow control mode

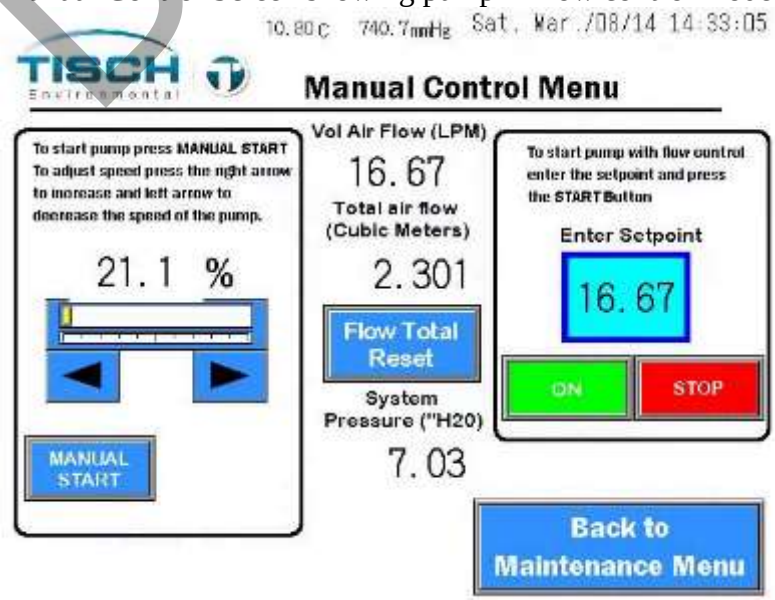

DRAFT

To operate the pump manually with a percent of speed, perform the following:

1. Press the MANUAL START BUTTON.
2. Press the ▶ right arrow button to increase the speed of the pump.
3. Press the ◀ left arrow button to decrease the speed of the pump.
4. Press the MANUAL STOP button to stop the pump.

Manual control screen showing pump in manual % speed control

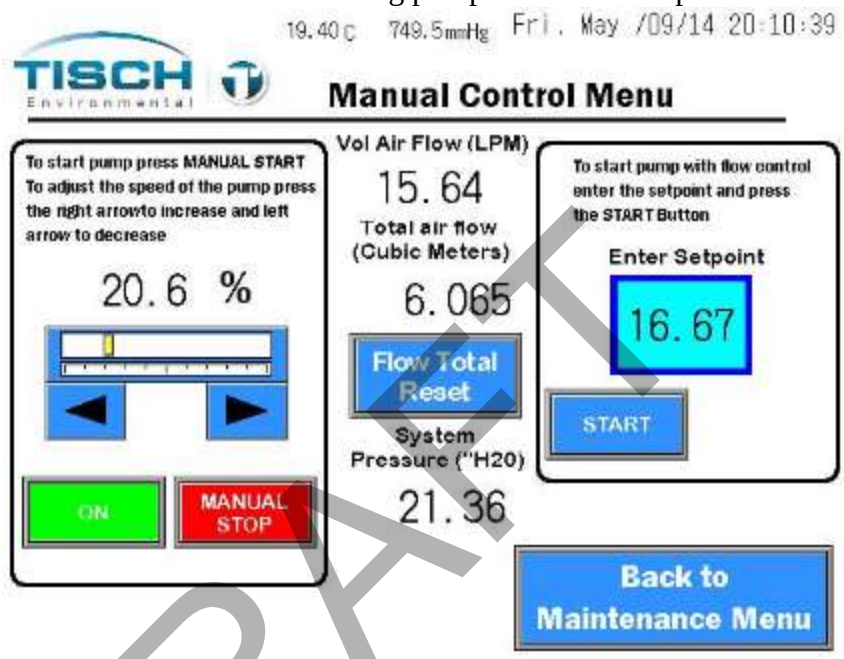

DRAFT

NOTE: If the system is running in manual mode and a sample starts, manual mode will be shut down and the sample will start as scheduled.

NOTE: When running in percent of pump speed manual mode, the only alarm that will shut down the pump is the high pressure alarm which is set to 200" H_2O of pressure.

NOTE: When running in flow control manual mode, all the alarms that will shut down a sample will also shut down the automatic flow control in manual mode with the exception of the flow variance alarm and the ten consecutive power fails alarm. See section 1.4 – Sample Alarms for details.

8.5 System Information

The system information screen is where the software versions can be found along with the total sampling runtime and the pump runtime. The pump runtime can be reset here.

The system information screen can be found by following these keystrokes:

MAIN MENU ➔ **MAINTENANCE MENU** ➔ **SYSTEM INFORMATION**

System Information Screen

DRAFT

Total Sampling Runtime This is the total in hours that a sample has been running. This value is not resettable.

Pump Runtime This is the amount of time the pump has been running either sampling, in manual mode or performing calibrations. The pump runtime can be reset by pressing the Reset Pump Runtime button. Pump rebuilds are recommended at 3,000 hours and the operator is prompted when the pump has 3,000 hours of runtime. See section 12.0 – Maintenance for information on rebuilding the pump.

PLC Software Version	This is the software version that is currently loaded in the PLC controller.
Screen Software Version	This is the software version that is currently loaded into the screen.
Unit Serial Number	This is the serial number of the unit. The last 3 digits of the unit serial number is appended to the datalog and history log file names.

8.6 Data Download Menu

The data download menu can be found by following these keystrokes:

MAIN MENU ➔ **MAINTENANCE MENU** ➔ **DATA DOWNLOAD MENU**

In the data download menu, several functions regarding the data log and USB functions can be accomplished such as:

Download Run Summary Data	Allows the operator to download the datalog that contains all of the pertinent run summary data. See Section 8.0 – Data Logging and Operational Data.
Download History Data	Allows the operator to download the history log that contains all the events and alarms that occurred.
Eject USB	Ejects the USB stick from the unit. **NOTE:** If the USB stick is not ejected properly a warning will appear that will need acknowledged by pressing the ACK button in the center (See note below).
Erase Data and Alarm Log	Allows the user to erase the data log and alarm log. **This is a permanent erase that is non-recoverable from the internal memory**. This does not erase any data from the USB stick, but will clear the internal data and history log to start new logs.

NOTE: The datalog and history log filenames are appended with the last 3 digits of the unit's serial number.

DRAFT

NOTE: Before removing the USB drive from the USB port, the USB must be ejected by pressing the Press to Eject USB Drive button. This is to prevent data loss by stopping the USB access before the drive is removed. If the USB is removed without ejecting, a small screen will alert the user that next time they need to eject the USB before removing it.

Press the Ack button to acknowledge this warning.

Data Download Menu

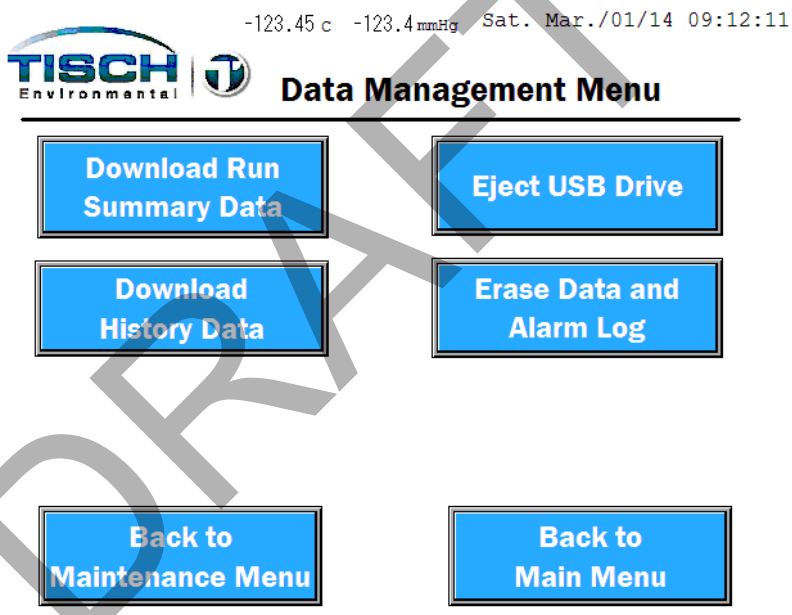

DRAFT

8.7 Update Firmware

To update the firmware of the screen or the controller perform the following:

1. The firmware files must be first downloaded from the Tisch Environmental website at www.tisch-env.com.
2. Ensure you are downloading the latest firmware revision and read the firmware revision notes.

The filename for the screen is: wilburscreen.znv
The filename for the controller is: wilburplc.zld

3. Place these files on the root directory of a USB stick and insert the USB stick into the USB socket.
4. When the pop-up for inserting a USB appears press CLOSE WINDOW to close the pop-up.
5. The update firmware can be found by following these keystrokes:

MAIN MENU	➔	MAINTENANCE MENU	➔	MORE MAINTENANCE MENU	➔	UPDATE FIRMWARE FROM USB

6. When the Update Firmware from USB is pressed the following pop-up window will appear alerting the operator that there could be a critical failure if this is not done properly:

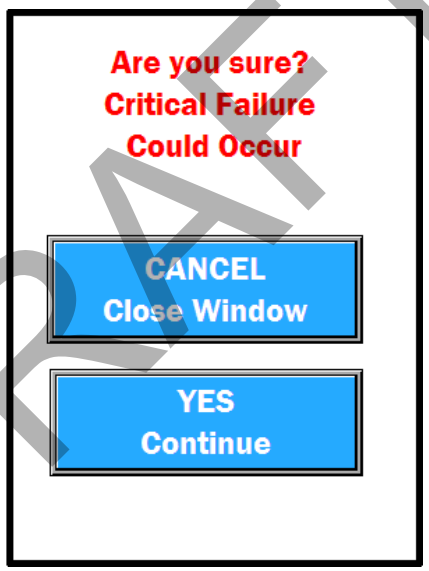

DRAFT

7. Ensure the system is plugged into a reliable power source before performing the firmware updates. Loss of power during a firmware update could corrupt the system causing a failure.
8. Press the YES Continue button and the operator will be prompted for which firmware update they would like to perform – screen update or controller update.

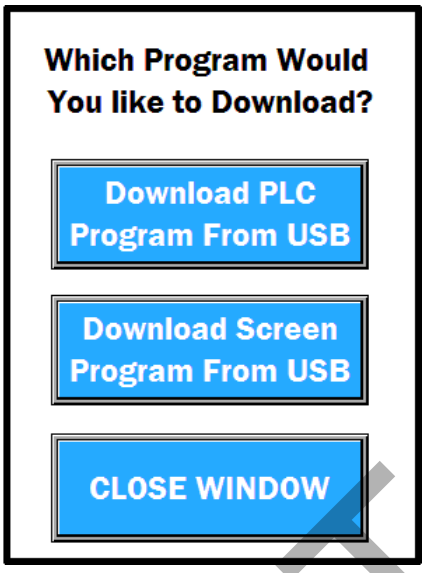

9. To update the controller firmware, press the Download PLC Program from USB. PLC stands for 'Programmable Logic Controller' which is the controller platform used in the TE-Wilbur. It will take about a minute to update the firmware and when complete the operator will be prompted that the update was successful or if the update failed and to press acknowledge.
10. To update the screen firmware, press the Download Screen Program from USB. It will take about a minute to update the firmware and when complete the operator will be prompted that the update was successful or if the update failed and to press acknowledge.
11. Press the CLOSE WINDOW button to close the firmware update popup and press the EJECT USB button to eject the USB drive. Remove the USB drive.

NOTE: If the Firmware update fails, ensure the file is on the root of the USB drive. Also ensure the files have the correct file names. Try using a different USB drive to perform the update and if you are still having troubles call Tisch Environmental at 1-877-263-7610 (1-877-TSP-AND-PM10).

DRAFT

8.8 Change Sample Setpoint

The sample setpoint can be changed by following these keystrokes:

MAIN MENU	➔	MAINTENANCE MENU	➔	MORE MAINTENANCE MENU	➔	CHANGE SAMPLE SETPOINT

To change the setpoint press the setpoint box, type in the value of the setpoint and press the ENT key to accept.

NOTE: Changing the setpoint will cause the sampler when sampling to run at this setpoint. Per USEPA specifications the setpoint should always be set to 16.67 Lpm for proper operation.

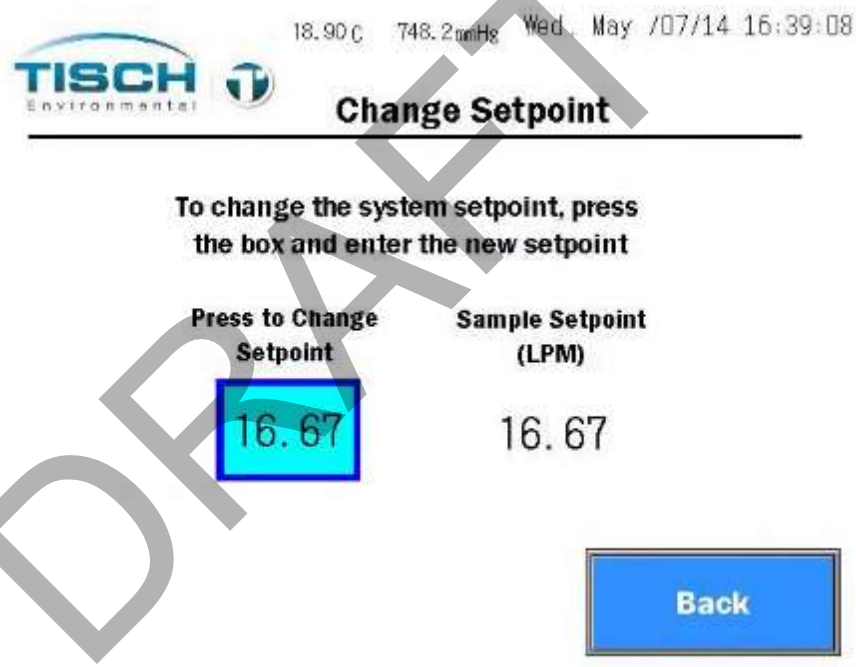

DRAFT

8.9 Change MODBUS Address

The address of the MODBUS communication port can be changed by pressing the Change Modbus Address button found by following these keystrokes:

MAIN MENU	➔	MAINTENANCE MENU	➔	MORE MAINTENANCE MENU	➔	CHANGE MODBUS ADDRESS

Change Modbus Address Pop-up screen

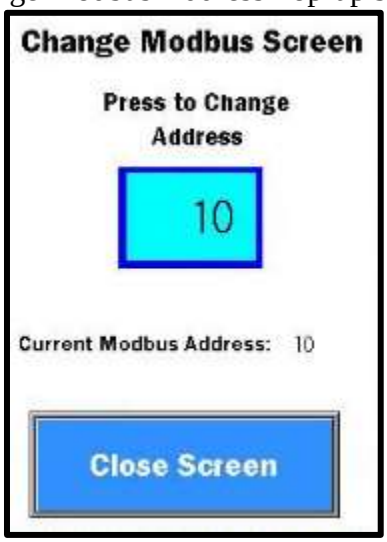

See Section 14 - Communications for more information on Modbus.

8.10 Datalogging Time

The time that the data log stores its values can be changed by pressing the Datalog Time Setting button found by following these keystrokes:

MAIN MENU ➔ **MAINTENANCE MENU** ➔ **MORE MAINTENANCE MENU** ➔ **DATALOG TIME SETTING**

NOTE: Per USEPA this value is defaulted to 300 seconds (5 minutes). Any deviation of this may invalidate sample data.

Change Datalog Timing pop-up screen

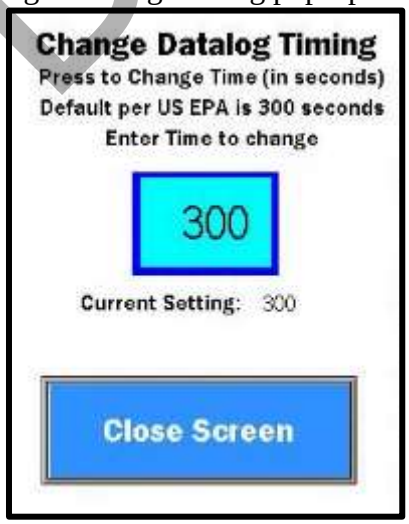

DRAFT

9.0 Data Logging / Operational Data

This section explains the data functions with TE-Wilbur, how data is collected, stored in the datalog and displayed on the screen.

9.1 Operational Data

The operational data can be found by following these keystrokes:

MAIN MENU	➔	OPERATIONAL DATA

There are (3) screens of operational data. On these screens the following information is presented to the operator:

Volumetric Air Flow (Lpm)	The volumetric air flow (Q_{actual}) of the system in real time and the maximum and minimum volumetric flow rate updated every 30 seconds.
Barometric Pressure (mmHg)	The barometric pressure in millimeters of mercury in real time and the maximum and minimum barometric pressure updated every 30 seconds.
System Pressure ("H_2O)	The system vacuum pressure in inches of water in real time and the maximum and minimum system pressure updated every 30 seconds.
Filter Temp (Deg C)	The filter temperature in degrees Celsius in real time and the maximum and minimum filter temperature updated every 30 seconds.
Ambient Temp (Deg C)	The ambient temperature in degrees Celsius in real time and the maximum and minimum ambient temperature updated every 30 seconds.
Temperature Variance (Deg C)	The difference between the ambient temperature and the filter temperature in real time and the maximum and minimum temperature variance updated every 30 seconds.
Total Airflow (Liters / m^3)	The total air flow shown in cubic meters and in liters.

DRAFT

Sample runtime (Hours)	The sample runtime that is currently running or the last sample runtime that has just completed.
Average flowrate of the sample (Lpm)	The average flowrate of the sample that is currently running or the average flowrate of the sample that has just completed.
Filter and Site ID	The filter and site ID entered by the operator.

9.2 Downloading Data to USB

Data from the data log and the history log are saved from the internal memory of the screen onto an SD card located in the screen. The data that is saved to the SD card can then be downloaded to a USB by inserting a USB drive into the USB port on the front of the unit or by accessing the Data Download screen at the following location:

MAIN MENU ➔ **MAINTENANCE MENU** ➔ **DATA DOWNLOAD MENU**

When inserting a USB drive into the USB port on the front the following popup screen will appear:

USB Inserted popup Screen

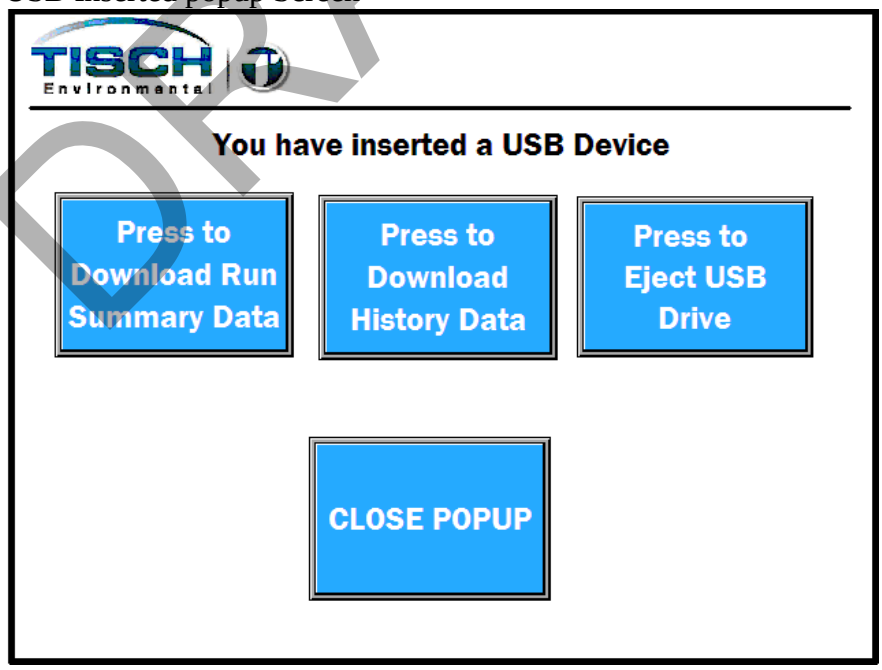

On this popup screen the operator can download the run summary data which is the operational log described in 9.3 of this section and the history log which is described in Section 10.0 of this manual.

DRAFT

NOTE: Before removing the USB drive from the USB port, the USB must be ejected by pressing the Press to Eject USB Drive button. This is to prevent data loss by stopping the USB access before the drive is removed. If the USB is removed without ejecting, a small screen will alert the user that next time they need to eject the USB before removing it.

Press the Ack button to acknowledge this warning.

9.3 Datalog and Sample Summary Datalog

The datalog stores all data values based on the datalog timer setting which can be changed here:

MAIN MENU ➔ **MAINTENANCE MENU** ➔ **MORE MAINTENANCE MENU** ➔ **DATALOG TIME SETTING**

The default time for the data log is 5 minutes (300 seconds).

The datalog will continuously log data regardless if a sample is running.

The datalog is in a standard comma separated value (.CSV) file which can be opened from any standard spreadsheet program. The datalog is stored as the filename wilbur_data.csv with the three digit number of the sampler's serial number appended to the file name. So if the sampler's serial number is 4786 the filename will be: wilbur_data786.CSV.

When downloading to a USB drive, a folder called run_summary_data is created and the datalog will be stored in that location.

Another datalog is downloaded along with the run summary data. This datalog is called the sample summary datalog.

DRAFT

The datalog contains the following information:

Qvol avg The average volumetric air flow (Qactual) over the time of the datalog timer in liters per minute.

Qvol max The maximum value of volumetric air flow (Qactual) over the time of the datalog timer in liters per minute.

Qvol min The minimum value of volumetric air flow (Qactual) over the time of the datalog timer in liters per minute.

Pa avg The average barometric pressure in mmHg over the time of the datalog timer.

Pa max The maximum barometric pressure in mmHg over the time of the datalog timer.

Pa min The minimum barometric pressure in mmHg over the time of the datalog timer.

Tfilter avg The average temperature in degrees Celsius of the filter temperature over the time of the datalog timer.

Tfilter max The maximum temperature in degrees Celsius of the filter temperature over the time of the datalog timer.

Tfilter min The minimum temperature in degrees Celsius of the filter temperature over the time of the datalog timer.

Tamb avg The average temperature in degrees Celsius of the ambient temperature over the time of the datalog timer.

Tamb max The maximum temperature in degrees Celsius of the ambient temperature over the time of the datalog timer.

Tamb min The minimum temperature in degrees Celsius of the ambient temperature over the time of the datalog timer.

Press avg The average suction pressure in inches of water of the system over the time of the datalog timer.

Press max The maximum suction pressure in inches of water of the system over the time of the datalog timer.

Press min The minimum suction pressure in inches of water of the system over the time of the datalog timer.

DRAFT

TVar avg The average temperature variance between the ambient temperature sensor and the filter temperature sensor in degrees Celsius over the time of the datalog timer.

TVar max The maximum temperature variance between the ambient temperature sensor and the filter temperature sensor in degrees Celsius over the time of the datalog timer.

TVar min The minimum temperature variance between the ambient temperature sensor and the filter temperature sensor in degrees Celsius over the time of the datalog timer.

Flow total The total flow in liters updated based on the time of the datalog timer. If the sample has stopped this will be the total flow of the last sample completed. The flow total is reset to zero when a new sample is started.

Flow CV The flow coefficient of variance from the start of the datalog timer to the end of the datalog timer.

Filter ID The filter ID entered by the operator.

Site ID The site ID entered by the operator.

Unit S/N The serial number of the sampler.

DRAFT

NOTE: The datalog will fill up after its size allocation is exceeded. When this happens the older data will get replaced by the newer data. If the data log is set to the 5 minute recommended setting, it will take several years to fill up the data log.

The larger the data and history logs are, the longer it will take to copy them to the USB stick. Resetting them periodically is recommended.

The sample summary datalog contains the following information:

Filter ID The filter ID entered by the operator.

Site ID The site ID entered by the operator.

Unit S/N The serial number of the sampler.

Min Tamb The minimum ambient temperature that occurred during the sample

Max Tamb The maximum ambient temperature that occurred during the sample

Avg Tamb The average ambient temperature that occurred during the sample

Start Tamb The ambient temperature at the start of the sample

End Tamb The ambient temperature at the end of the sample

Min Pamb The minimum ambient pressure that occurred during the sample

Max Pamb The maximum ambient pressure that occurred during the sample

Avg Pamb The average ambient pressure that occurred during the sample

Start Pamb The ambient pressure at the start of the sample

End Pamb The ambient pressure at the end of the sample

Total Sample Time The total sample time of the sample in hours (decimal)

Volume The total volume of the sample in m^3/hour

Max CV The maximum coefficient of variance of the flow over the sample

Max Tdiff The maximum difference between the ambient temperature and the filter temperature over the sample

DRAFT

Min Tf The minimum filter temperature over the sample

Max Tf The maximum filter temperature over the sample

Avg Tf The average filter temperature over the sample

Start Date The start date of the sample in the format MMDDYYYY

Start Time The start time of the sample in the format HHMM

Sample Warning When 0, there were no sample warnings over the sample. When set to a 1, there was a sample warning and the history log must be examined to determine the warning.

9.4 Erasing the Datalog

To erase the datalog go to the following screen:

MAIN MENU ➔ **MAINTENANCE MENU** ➔ **DATA DOWNLOAD MENU** ➔ **ERASE DATA AND ALARM LOG**

The datalog, sample summary log, and the alarm log will be erased. This function cannot be undone, so ensure the datalog, sample summary and history log have been saved before continuing.

NOTE: This is a permanent erase that is non-recoverable from the internal memory. This does not erase any data from the USB stick, but will clear the internal data and history log to start new logs. Ensure the data is downloaded and verified prior to erasing the logs.

DRAFT

10.0 History Log

This section explains the history log, alarms and how data is stored and retrieved from the history log.

10.1 History Log Introduction

The history log can be found by following these keystrokes:

MAIN MENU ➔ **HISTORY LOG**

The history log contains all pertinent information that has occurred operationally with the sampler.

History Log Screen

DRAFT

When an event or an alarm occurs it is logged on this screen and also saved to the SD card, which then can be downloaded to a USB drive by either inserting a USB drive into the USB port or proceeding to the data download menu at:

MAIN MENU ➔ **MAINTENANCE MENU** ➔ **DATA DOWNLOAD MENU**

When an alarm occurs, it must first be resolved then it can be acknowledged by pressing the Acknowledge Alarms button.

So if for example, the ambient temperature sensor is unplugged, the history log screen will be shown notifying the operator that there is a problem. The ambient temperature sensor notification will be highlighted and will be red.

If the operator plugs the ambient temperature sensor back in, the alarm will still be highlighted and active until the operator acknowledges the alarm by pressing the acknowledge alarm button. Once that is pressed, the alarm will turn black indicating that it is no longer active and the system will be back to normal.

The alarm/event is time and date stamped when it occurred and when it was resolved.

The following two colors are used:

RED Indicates that an event or an alarm is active and is in progress. So for example when a sample is engaged this will be shown in red on the history log until that sample is canceled.

BLACK Indicates that an event or an alarm is no longer active or in progress. So when an alarm is cleared and then acknowledged it will be black.

NOTE: When there is an active alarm that requires attention, there will be this symbol shown on the top right corner of every screen:

The operator can go directly to the history log by pressing this symbol.

DRAFT

10.2 Alarms and Events

The following alarms and events are shown and logged in the history log:

Pump has been started from the screen	The pump has been started in either manual by pump speed percentage or by manual, automatic flow control.
Leak check started	Leak check was started.
Leak check passed	Leak check has passed and any leaks are less than 80mL/min.
Leak check failed	Leak check failed and there was a leak greater than 80mL/min.
Leak check failed – did not reach pressure	Indicates the Leak Check Failed due to the 60 second fail timer ending and the system pressure did not reach 50" H_2O. Indicates the filter holder or valve adapter was not closed.
Flow calibration started	A flow calibration was started.
Flow calibration quit by operator	A flow calibration was started but was terminated by the operator.
Flow calibration completed – Passed	Flow calibration was completed and R factor was less than 0.98 and passed.
Flow calibration completed – Failed	Flow calibration was completed and R factor was greater than 0.98 and failed.
Flow Check Setpoint 1 Started	Operator performed a flow system verification for setpoint 1.
Flow Check Setpoint 2 Started	Operator performed a flow system verification for setpoint 2.
Flow Check Setpoint 3 Started	Operator performed a flow system verification for setpoint 3.
Flow Check Setpoint 4 Started	Operator performed a flow system verification for setpoint 4.
Sample has been engaged	1in3, 1in6, 1in12 or custom sample is engaged.
Sample has been started	1in3, 1in6, 1in12 or custom sample is started.
1 in 3 sample selected	1in3 sample has been selected and engaged.

DRAFT

1 in 6 sample selected	1in6 sample has been selected and engaged.
1 in 12 sample selected	1in12 sample has been selected and engaged.
Custom sample selected	A custom sample has been selected and engaged.
Flow variance alarm during sample	The flow varied by more than 10% for 10 minutes during a sample – this will shut down a sample.
5% Flow variance warning	The flow varied by more than 5% for 5 minutes, will give a warning for the sample.
Sample less than 23or greater than 25 hours	The sample time was less than 23 hours or greater than 25 hours, most probably due to a complete loss of power. Will give a warning for a sample.
Ambient temperature unplugged or failed	The ambient temperature sensor was unplugged, dropped below -90 Deg C, went above +60 Deg C or there was an internal problem with the controller– this will shut down a sample.
Filter temperature unplugged or failed	The filter temperature sensor was unplugged, dropped below -90 Deg C, went above +60 Deg C or there was an internal problem with the controller – this will shut down a sample.
Flowmeter unplugged or failed	The flowmeter was unplugged, went above 25 Lpm, below 0 Lpm or there was an internal problem with the controller – this will shut down a sample.
Barometric press sensor unplugged or failed	The barometric pressure sensor was unplugged, went below 450 mmHg, went above 850mmHg or there was an internal problem with the controller – this will shut down a sample.
System pressure sensor unplugged or failed	The pressure sensor went above 15 psi of vacuum, fell below 0 psi or there was an internal problem with the controller.
Sample shutdown due to alarm condition	The current sample was terminated due to an alarm.
5 Deg temp variance for 30 minutes	The difference between the ambient temperature and the filter temperature was greater than 5 Degrees Celsius
Barometric pressure updated	The barometric pressure sensor was calibrated and updated to a new value
Filter temperature updated	The filter temperature sensor was calibrated and updated to a new

DRAFT

	value.
Ambient temperature updated	The ambient temperature sensor was calibrated and updated to a new value.
Mains power lost	The system lost mains (AC) power and is now running on reserve DC power.
Power Fail	The system lost mains (AC) power and also reserve DC power and powered down completely.
Pump maintenance needed	The pump maintenance timer which is set to 5,000 hours has been exceeded. Indicating that pump maintenance is needed.
High system pressure shutdown	The system pressure reached 250 "H_2O of vacuum pressure – this will shut down a sample.
Flow Check Setpoint 1-4 Started	The operator has started a flow verification and used setpoint 1 thru 4.
Screen battery needs replaced	The battery in the touchscreen needs replaced. This battery is crucial for proper system operation see 12.0 Maintenance for instructions on replacing the screen battery.
Battery Discharged	The internal batteries have reached a voltage level where they are fully depleted.
Battery failure – replace batteries	The internal batteries have failed and need replaced. See section 12.0 Maintenance for instruction on replacing the battery pack.

DRAFT

10.3 Alarm Flowchart

The following shows how an alarm occurs, is acknowledged and returns to normal operation with an example of the ambient temperature sensor being unplugged.

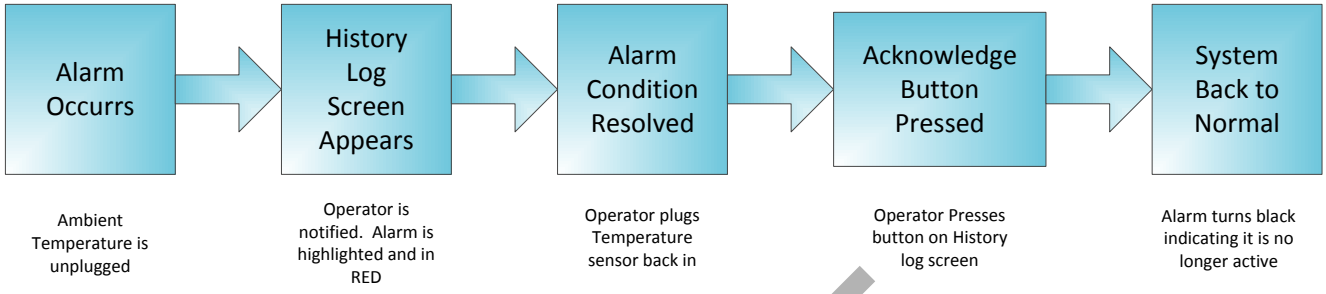

10.4 History Log Download

Data from the data log and the history log are saved from the internal memory of the screen onto an SD located in the screen. The data that is saved to the SD card can then be downloaded to the USB stick by inserting a USB stick into the USB port on the front of the unit or by accessing the Data Download screen by the following keystrokes:

MAIN MENU ➔ **MAINTENANCE MENU** ➔ **DATA DOWNLOAD MENU**

When inserting a USB drive into the USB port on the front the following popup screen will appear:

USB Inserted popup Screen

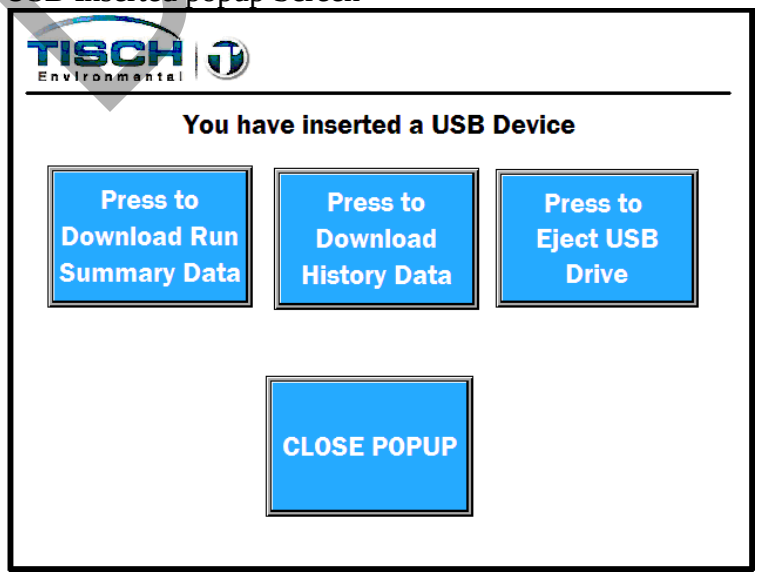

DRAFT

On this popup the operator can download the run summary data which is the datalog described in Section 8.0 of this section and the history log.

NOTE: Before removing the USB drive from the USB port, the USB must be ejected by pressing the Press to Eject USB Drive button. This is to prevent data loss by stopping the USB access before the drive is removed. If the USB is removed without ejecting, a small screen will alert the user that next time they need to eject the USB before removing it.

Press the Ack button to acknowledge this warning.

The history log is in a standard comma separated value (.CSV) file which can be opened from any spreadsheet program. The history log is stored as the filename wilbur_history.csv with the last three digits of the units serial number appended to the file name. So if the serial number of the unit is 4786 the filename will be: wilbur_history786.CSV.

When downloading to a USB drive, a folder called history log is created and the history log will be stored in that location.

10.5 Erasing the History Log

To erase the history follow these keystrokes:

MAIN MENU ➔ **MAINTENANCE MENU** ➔ **DATA DOWNLOAD MENU** ➔ **ERASE DATA AND ALARM LOG**

The datalog and the alarm log will be erased. This function cannot be undone, so ensure the datalog and history log have been saved before continuing.

NOTE: This is a permanent erase that is non-recoverable from the internal memory. This does not erase any data from the USB stick, but will clear the internal data and history log to start new logs. Ensure the data is downloaded and verified prior to erasing the logs.

DRAFT

11.0 Leak Checks

This section details the leak check functions of TE-Wilbur.

11.1 Leak Check Introduction

There are two types of leak checks, an internal leak check and an external leak check. The external leak check checks the entire system from the output of the solenoid, to the end of the downtube and utilizes a TE-L30 adapter to plug the flow stream where the TE-PM10-D head would normally be. The internal leak check uses a TE-W-004 solid, blank disk that is inserted into the filter holder and checks the leak from the bottom of the filter holder to the output of the solenoid, bypassing any leaks in the filter holder, downtube or TE-L30 adapter. Per USEPA 40CFR Part50 App. L the sampler must be able to pass a leak check to demonstrate a leak of no more than 80mL/min is present. Using thermodynamic formulas the sampler calculates the ending pressure necessary to pass a leak check that demonstrates no more than an 80mL/min leak in the system.

DRAFT

Pneumatic flow diagram of TE-Wilbur

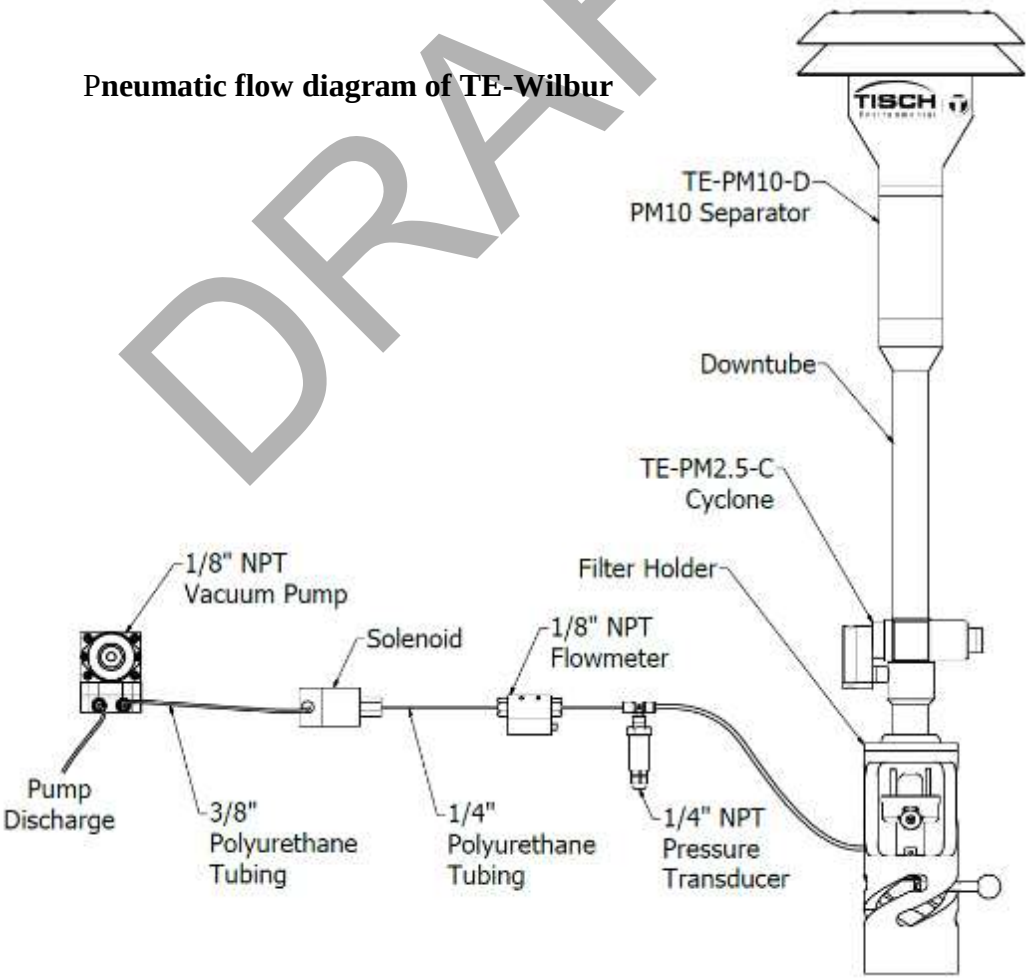

Leak checks can be performed by following these keystrokes:

MAIN MENU	➔	PERFORM LEAK CHECKS

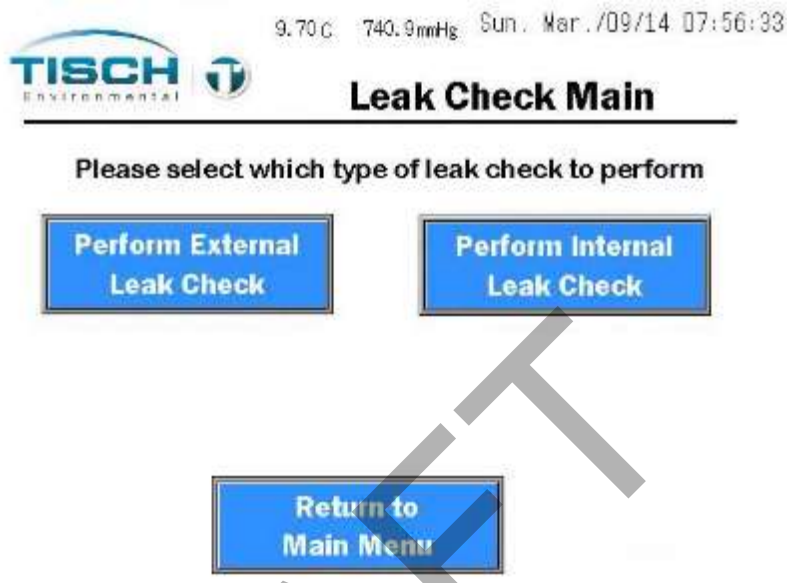

NOTE: If the pressure sensor is failed, leak checks will not be available and the following box will appear, disabling the leak check feature.

11.2 External Leak Check

To perform an external leak check, perform the following steps:

1. Insert a clean filter (designated the "leak check filter") into a filter cassette with a screen and insert the cassette into the sampler filter holder.

   NOTE: Leak check filters should never be used for subsequent sampling. The same filter may be used for the leak check that was used for the flow rate verification check.

DRAFT

2. Close the filter holder
3. Remove the PM-10 inlet and install the TE-L30 flow rate adapter on the top of the downtube.

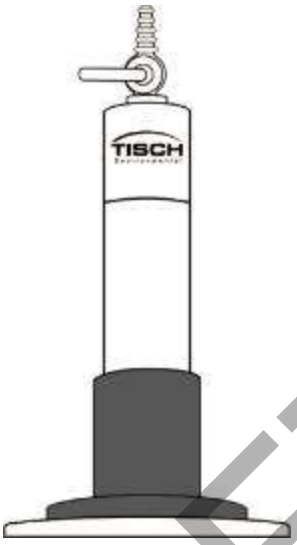

Picture of the TE-L30 Downtube adapter placed on top of the downtube with the valve in the closed position

4. Close the valve on the flow rate adapter to plug the air flow.
5. Press the Select External Leak Check button on the Leak check selection screen.
6. At the Perform External Leak Check Next Steps screen, the screen will show the TE-L30 adapter closed and the filter holder closed. Press next step and then press the Final Step button.
7. You will now be at the Leak Check Control Screen.

Leak Check Control screen

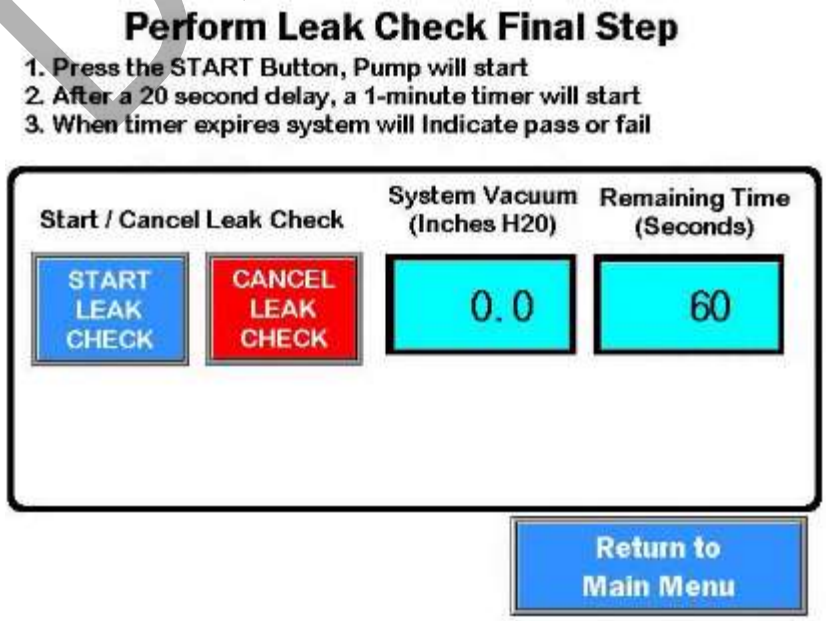

DRAFT

8. Press the START LEAK CHECK button.
9. The system will start the pump and pull a vacuum on the system.

   NOTE: if the TE-L30 adapter is not closed and the vacuum does not reach 50" H_2O, after 60 seconds the system will stop and fail.

10. Once the system pulls a vacuum of 50" H_2O, the solenoid will close, isolating the system from the solenoid to the TE-L30 adapter. The final ending pressure will be much greater than 50" H_2O since the system will stabilize to a final ending pressure.
11. After 20 seconds to allow the system to stabilize, the leak check timer of 60 seconds will start and the system will calculate the final ending pressure in order to pass an external leak check of less than 80mL/min.
12. If the external leak check passes, a green box will appear after the leak check timer expires indicating the external leak check has passed.
13. If the external leak check fails, meaning the vacuum pressure has dropped below the final ending pressure, meaning a leak of more than 80mL/min is present, a red box will appear after the leak check timer expires indicating the external leak check has failed.
14. To cancel the external leak check press the CANCEL LEAK CHECK button at any point or press the return to main menu button.
15. After the external leak check is completed, open the TE-L30 adapter slowly to prevent any damage from the inrush of air into the system.

DRAFT

11.3 Internal Leak Check

To perform an internal leak check, perform the following:

1. Place the solid internal leak check disk into the filter holder.

   TE-W-004 Solid internal leak check disk

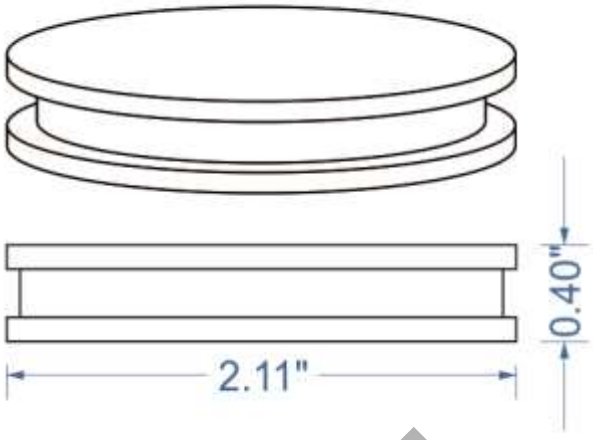

2. Close the filter holder.
3. Press the Perform Internal Leak Check at the leak check select screen.
4. At the step 1 screen press next step to go to the step 2 screen.
5. At the step 2 screen press final step to go to the leak check control screen.
6. You will now be at the Leak Check Control Screen.

DRAFT

Leak Check Control screen

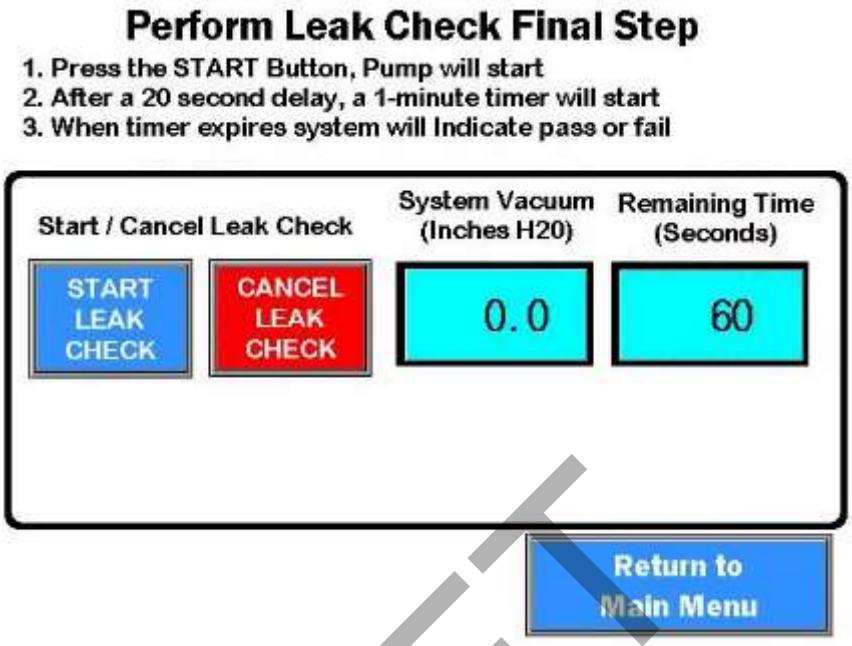

7. Press the START LEAK CHECK button.
8. The system will start the pump and pull a vacuum on the system.

   NOTE: if the system vacuum does not reach 50" H_2O, after 60 seconds the system will stop and fail.

9. Once the system pulls a vacuum of 50" H_2O, the solenoid will close, isolating the system from the solenoid to the bottom half of the filter cassette. The final ending pressure will be greater than 50" H_2O since the system will stabilize to a final ending pressure.
10. After 20 seconds to allow the system to stabilize, the leak check timer of 60 seconds will start and the system will calculate the final ending pressure in order to pass an internal leak check of less than 80mL/min.
11. If the internal leak check passes, a green box will appear after the leak check timer expires indicating the leak check has passed.
12. If the internal leak check fails, meaning the vacuum pressure has dropped below the final ending pressure, a red box will appear after the leak check timer expires indicating the internal leak check has failed.
13. To cancel the internal leak check press the CANCEL LEAK CHECK button at any point or press the return to main menu button.
14. After the internal leak check is completed, remove the internal leak check disk and return unit back to normal operation.

DRAFT

11.4 Leak Check Troubleshooting

If the external or internal leak check fails, consider the following troubleshooting techniques.

External Leak Check

- Ensure there is a filter and screen in the filter cassette, the filter holder is closed and the filter cassette is seated properly in the filter holder.
- Ensure the TE-L30 adapter is on top of the downtube and the valve is closed.
- Check all the o-rings in the TE-L30, the downtube and the filter holder top and bottom halves for wear or damage. Replace worn or damaged o-rings.
- Ensure the o-rings are greased.
- Try a different filter cassette, TE-L30 adapter or downtube.
- If leak checking with a cyclone in place, ensure all o-rings in the cyclone are not damaged or worn. Ensure the connector is tight and the collector cup is tight.
- Perform an internal leak check. If the internal leak check passes, then the leak is somewhere from the filter holder up to the TE-L30 adapter
- Make adjustments to the filter holder to tighten it. See section 3.0 for instructions on the filter holder adjustment.
- If the external leak check fails see below for troubleshooting.

Internal Leak Check

- Make sure the solid internal leak check disk is inserted and seated properly into the filter holder.
- Ensure the filter holder is closed and the filter cassette is seated properly in the filter holder.
- Try a different leak check disk.
- Check the thermo-well on the front of the filter holder to ensure it is tight and sealed.
- Check all internal fittings to ensure they are tight and sealed – see section 12.0 Maintenance for instructions on opening the front cover.
- Check the tightness of the filter holder mechanism and adjust to tighten. See Section 3.0 – Filter Handling / Filter Holder for instructions on tightening the filter holder mechanism.

DISCONNECT MAINS POWER AND BATTERY POWER BEFORE OPENING THE FRONT COVER

DRAFT

12.0 Solar / Alternative Energy

This section explains the optional solar panel accessory and the alternative energy connection for TE-Wilbur.

12.1 Introduction

The TE-Wilbur sampler has the ability to be run on alternative 24VDC power from solar, wind, external batteries or any other 24VDC source. An external DC connector is provided to allow connection to the alternative DC source.

12.2 Solar Wiring Overview

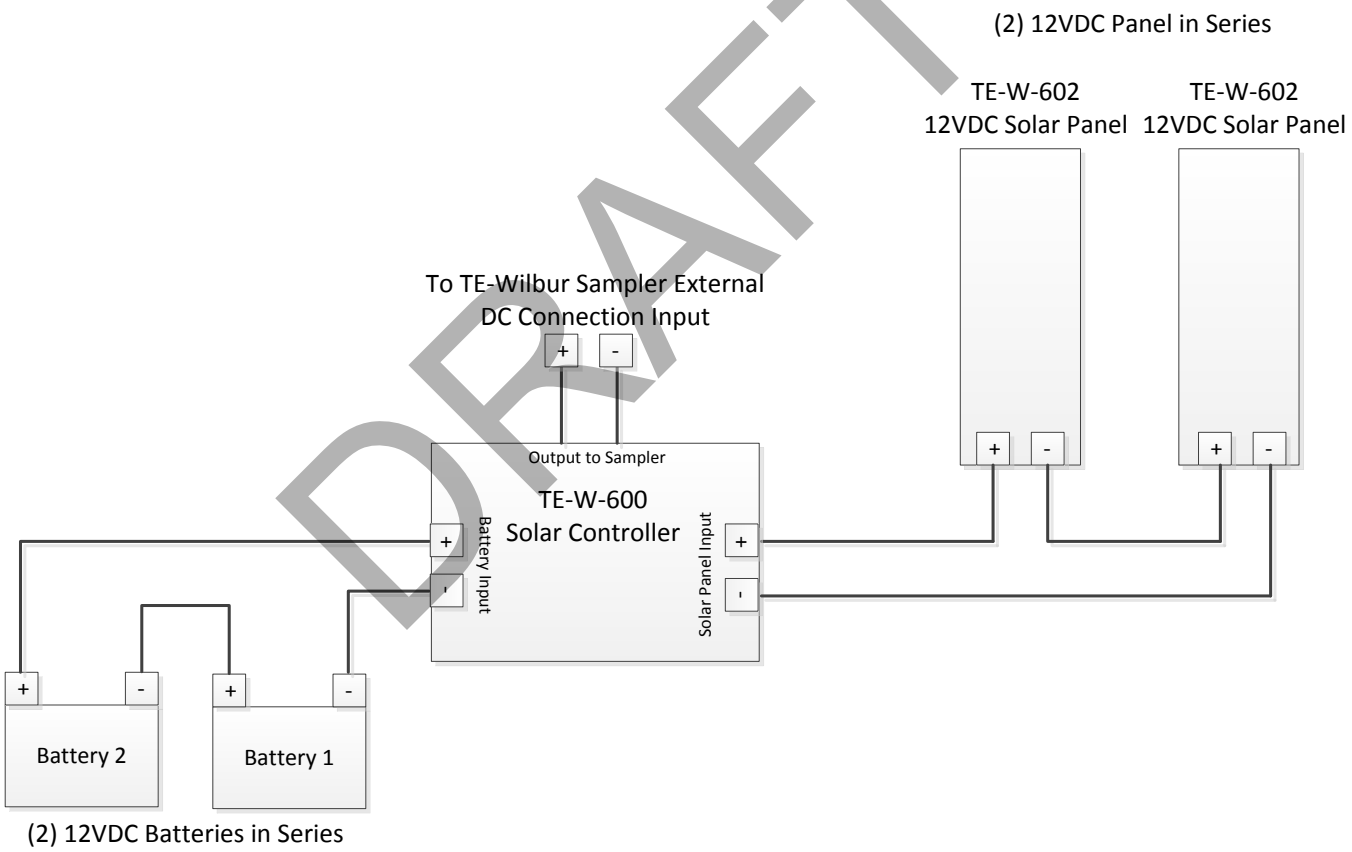

DRAFT

12.3 Solar Accessories

Accessory P/N	Description
TE-W-600	Complete solar kit with (2) 12V 100Watt panels, MC cables, solar controller mounted in weatherproof enclosure with fusing. Batteries NOT included
TE-W-602	24VDC Solar Panel only.
TE-W-608	Connection cable from Solar panel or other alternative energy source to TE-Wilbur sampler.

12.4 Solar Siting Guidelines

The following map shows average solar hours per day throughout the world. The lighter shades have lower sun hours versus the darker shades

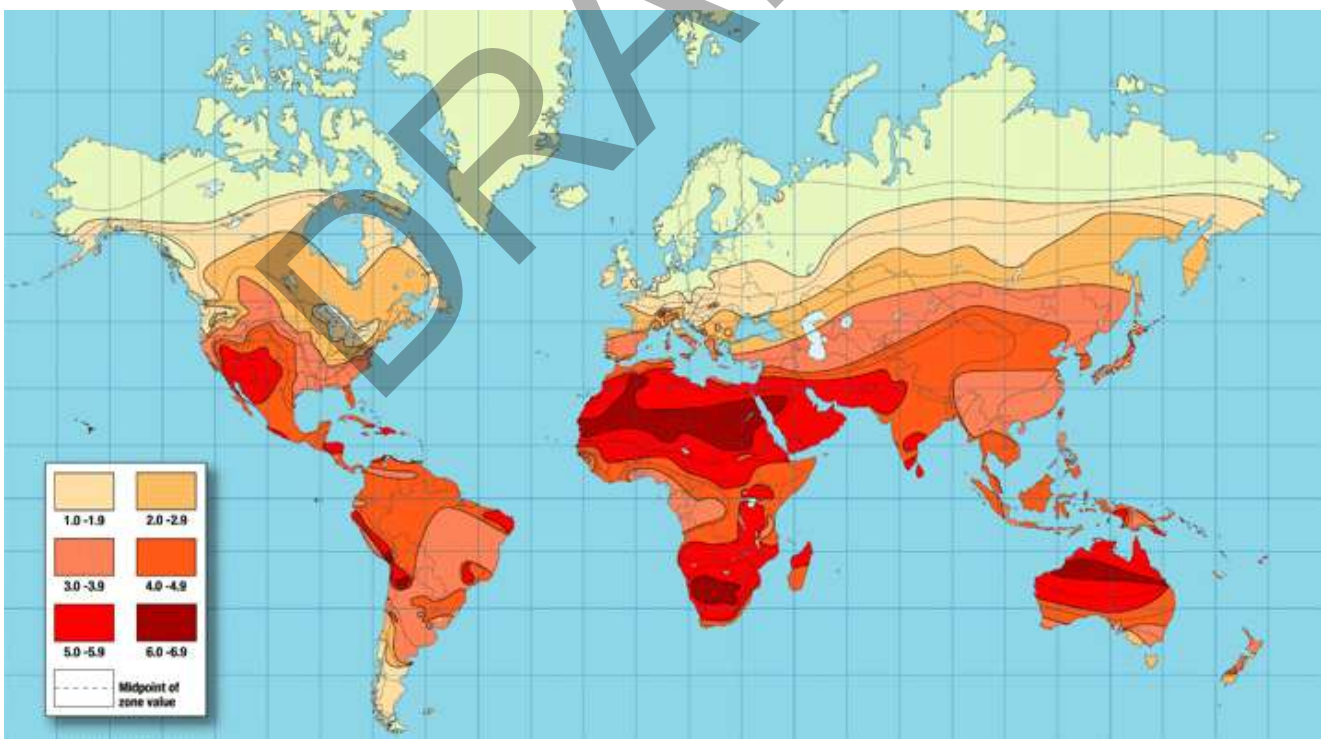

DRAFT

The following map shows the solar radiation across the United States

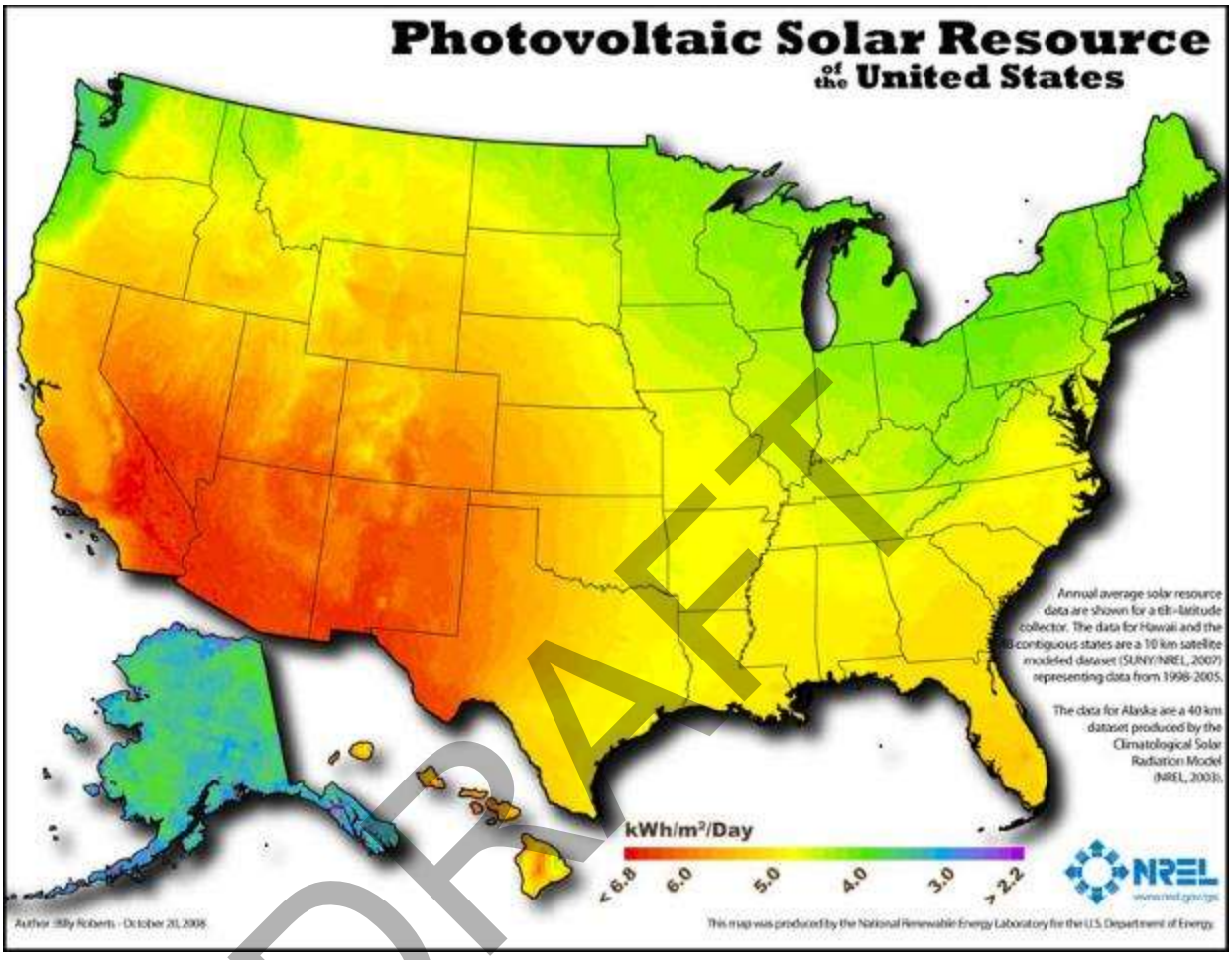

DRAFT

TE-Wilbur Power Requirements at 24VDC:

When sampling	1250mA	30 watts
When idle	625mA	15 watts

Some useful links for Solar applications:

National Oceanic and Atmospheric Administration (NOAA)
http://www.esrl.noaa.gov/gmd/grad/solcalc/

National Renewable Energy Laboratory (NREL)
http://www.nrel.gov/

12.5 Solar Controller Operation

The Solar accessory is controlled from a Morningstar SunSaver MPPT charge controller.

NOTE: The instruction manual is included with each solar accessory and should be consulted for proper operation of the solar controller.

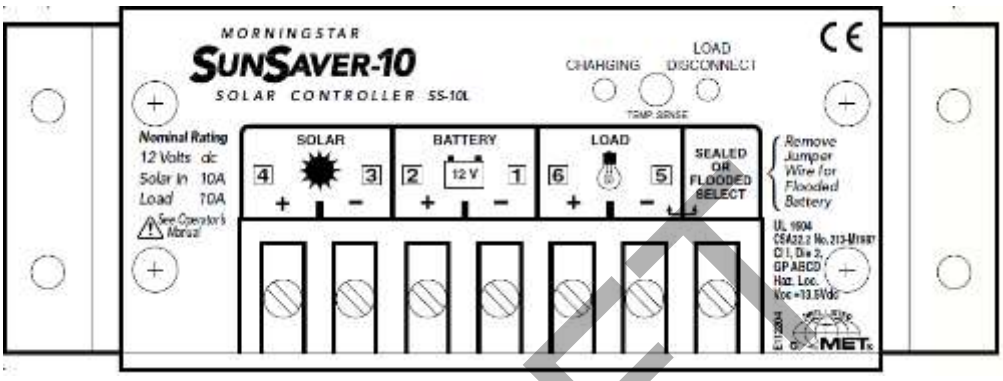

The controller has system status and battery status LEDs. Consult the user manual for LED status indications

12.6 Proper Solar Panel Orientation

Direction to face a solar panel

Solar panels should always face true south if you are located in the northern hemisphere and true north if you are located in the southern hemisphere. 'True' North and South are not the same as magnetic north and south. If using a compass you must find out your location's magnetic declination. There are several websites that are useful for this. The National Geophysical Data Center offers a calculator.

http://www.ngdc.noaa.gov/geomag-web/#declination

This website will calculate your latitude and longitude and the magnetic declination at that location. At our facility in Cleves, OH the magnetic declination is 5 Degrees West. So to properly point a solar panel you would use a compass to find magnetic north, then move 5 degrees to the west to find the true north since our facility is located in the northern hemisphere.

DRAFT

This map shows the magnetic declination for the year 2010

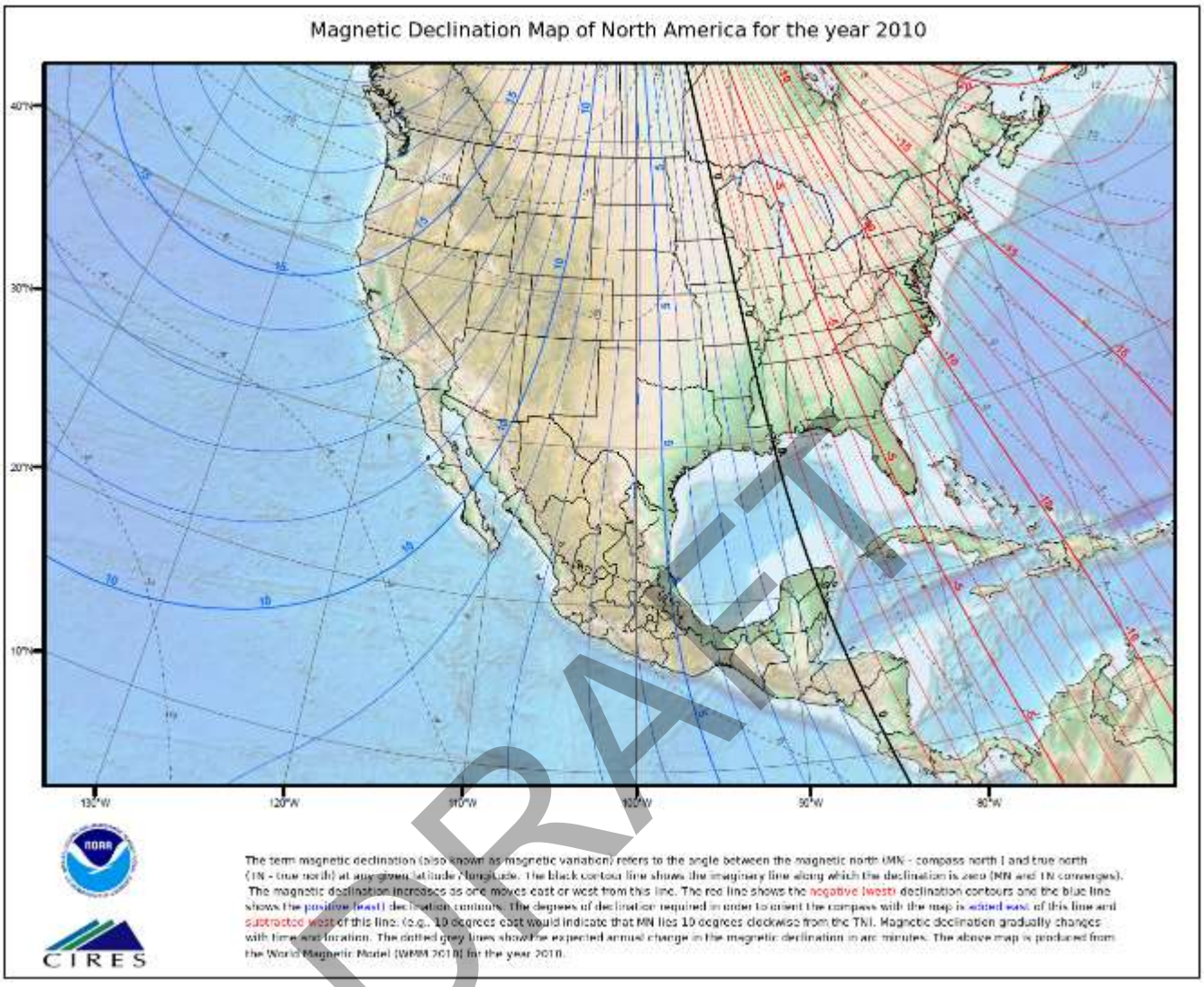

DRAFT

Proper Solar Panel Tilt

The tilt of the solar panel is important. If setting up the solar panel as fixed, meaning it will not move from summer to winter, use the following guidelines:

To find the angle from horizontal to tilt the solar panel:

Latitude	Tilt angle Calculation
Below 25º	Latitude x 0.87
Between 25º and 50º	Latitude x 0.76 + 3.1º
Over 50º	Best angle is 45º

This map gives an overview of the proper tilt angle for solar panels around the world:

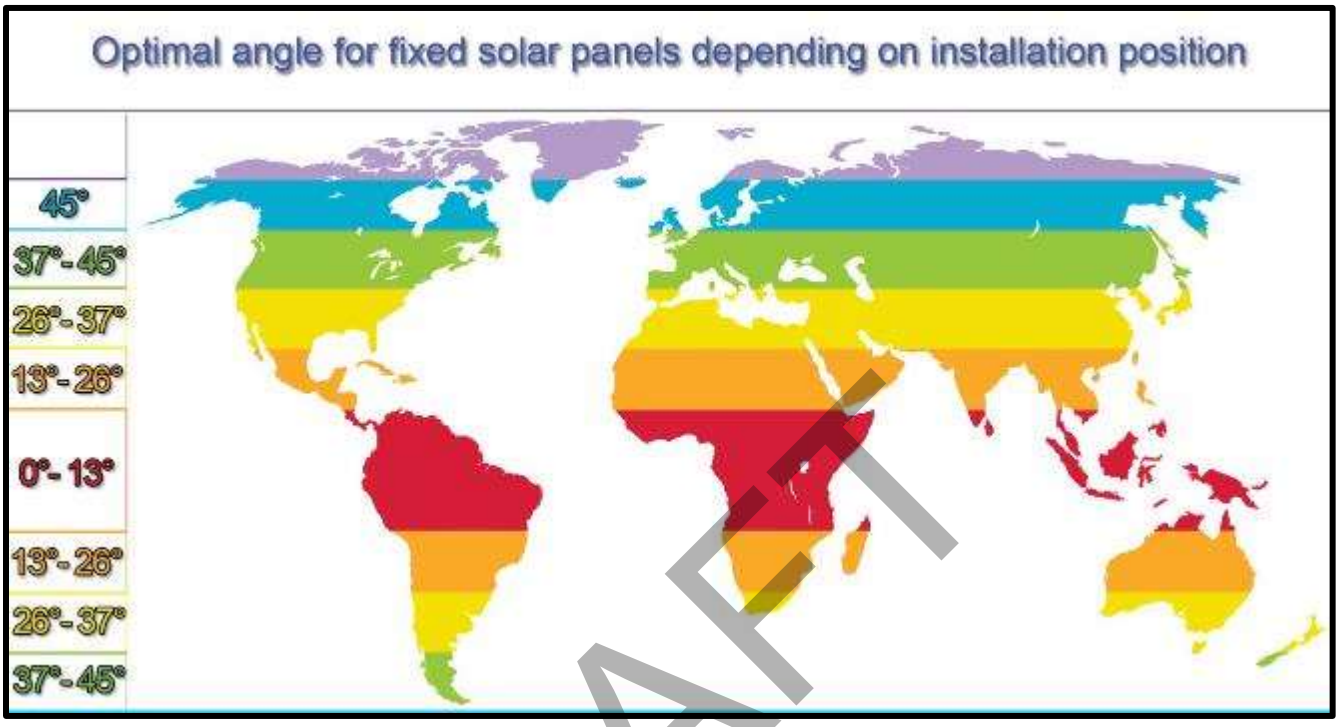

There are also many resources online to assist with getting the right tilt angle for the solar panels:

http://www.otilt.com/index.php

http://solarelectricityhandbook.com/solar-angle-calculator.html

DRAFT

13.0 Maintenance

This section describes the maintenance procedures for the TE-Wilbur sampler.

13.1 Electrical System

The TE-Wilbur operates on 120V/230VAC mains power. The system is then converted to 24VDC power which is supplied by a 60watt power supply.

Turning on the system

Plug the system into mains power, either 120VAC or 230VAC
Press the green button on the inside front cover, just below the touch-screen. The button has an internal green LED that will illuminate letting the operator know that mains power is on. When this light is off, mains power has been lost. When this happens, the system will switch to battery power. There will be a notification on the screen that mains power was lost and an entry in the history log.

A battery backup UPS (uninterruptable power supply) is used with 5 amp-hour batteries.

When power is lost, the system will automatically switch over to battery power and will continue to operate. This feature is only to keep a sample running for a few hours if there is an intermittent loss of mains power. If a longer runtime is needed, please refer to section 12.0 Solar / Alternative Energy.

The sealed lead-acid batteries in the system should last approximately 5 years.

Typical Runtime During Sampling:	Approximately 3-4 hours
Typical Runtime Idle:	Approximately 8-9 hours

Allow the batteries to fully charge by plugging the sampler into mains power for 24 hours.

DRAFT

Powering off the system

In order to power off the system, the batteries must be disconnected. To disconnect the batteries perform the following keystrokes:

MAIN MENU	➔	MAINTENANCE MENU	➔	BATTERY DISCONNECT

Pressing this button will disconnect the batteries from the system and allow the system to be powered down completely by removing mains power.

NOTE: If mains power is removed and the sampler is running on battery, pressing the disconnect battery button will power down the sampler. **Mains power must be applied to the sampler to power on again**.

The mains electrical connection is a standard IEC-320 plug configuration and is found in the weatherproof box on the side of the sampler.

A 1Amp resettable circuit breaker is located just below the AC inlet plug. If this circuit breaker would trip, it can be reset by pushing the button on the front.

WARNING – When powering down the system to perform maintenance, it is important to remove mains power from the sampler by unplugging the cord from the power source. The terminals for the plug and circuit breaker will be energized and could be accidentally touched inside the unit, resulting in a shock hazard.

DRAFT

Electrical System Layout

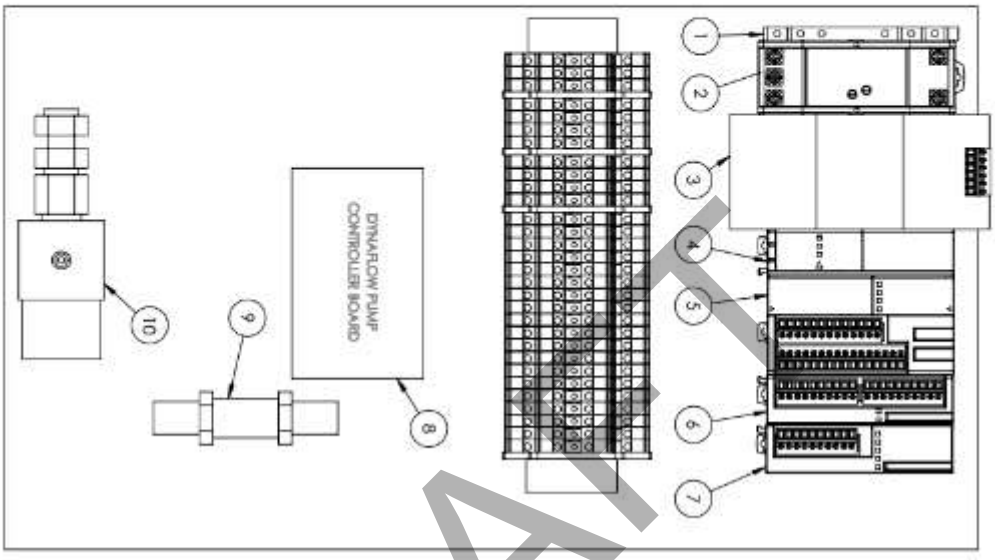

ITEM NO.	DESCRIPTION	PART NUMBER
1	Mains Power Fail Relay	TE-W-223
2	24VDC Power Supply	TE-W-202
3	24VDC UPS Module	TE-W-201
4	Modbus Communication Module	TE-W-104
5	Main PLC Controller	TE-W-101
6	Analog I/O Module	TE-W-102
7	Analog I/O/Temperature Module	TE-W-103
8	Pump Controller Board	TE-W-301
9	Barometric Pressure Tube	TE-W-154
10	Solenoid	TE-W-212

TISCH Environmental

MATERIAL

FINISH

TITLE: Wilbur Electric Panel

SIZE B DWG. NO. TE-W-70 REV 0

DO NOT SCALE DRAWING

DRAWN BY

SHEET 1 OF 1

DRAFT

13.2 Fuse Location and Replacement

There is one fuse used in the sampler and it is located in a fuse holder on the terminal strip left side.

WARNING – Before opening covers to perform maintenance, ensure unit is powered down completely. To power down completely, remove mains power and disconnect the battery at:

MAIN MENU	➔	MAINTENANCE MENU	➔	BATTERY DISCONNECT

To replace the fuse perform the following:

1. Open the front, lower cover by removing the 4 screws with a phillips screwdriver.
2. Remove the upper front cover by removing the 4 screws with a phillips screwdriver.
3. Notice the cabling - especially the cable that extends from the PLC on the rear plate to the screen, this cable could become unplugged if the upper panel is pulled away too far from the sampler.
4. The upper plate should be able to be placed on top of the sampler without disconnecting any of the cables.
5. The fuse holder is located on the left side of the terminal strip on the rear panel.
6. Open the fuse holder by pulling down on the top tab of the lever arm.
7. The fuse is located in the lever arm. Remove the fuse and check either visually and/or with a continuity / ohmmeter to see if it has blown.
8. Replace the fuse as needed.
9. Push fuse holder lever arm back into the fuse holder ensuring it is seated correctly.
10. Reinstall upper and lower plates.

DRAFT

Fuse table

F1	Littlefuse	021702.5HXP (5x20mm glass)	2.5 Amp / 250V

Tisch Environmental fuse part number TE-W-208.

13.3 Replacing the Batteries

The battery pack that is utilized in the sampler is 24VDC at 5 amp-hours. It contains two sealed lead acid (SLA) type batteries and can be ordered by part number TE-W-200. When the batteries have failed there will be an alarm that indicates battery failure. There is also an alarm when the batteries have been fully discharged. When this alarm activates, there is only several minutes of battery time before power is lost. If the batteries are not keeping the system energized for very long this is also an indication that the batteries need replacing. When the batteries fail, the sampler will continue to operate as normal, except when there is a mains power loss, the unit will power down completely.

The sealed lead-acid batteries in the system should last approximately 5 years.

Typical Runtime During Sampling: Approximately 3-4 hours

Typical Runtime Idle: Approximately 8-9 hours

To replace the batteries perform the following:

WARNING – Before opening covers to perform maintenance, ensure unit is powered down completely. To power down completely, remove mains power and disconnect the battery at:

MAIN MENU	➔	MAINTENANCE MENU	➔	BATTERY DISCONNECT

1. Power down the sampler.
2. Remove the lower front cover by removing the 4 screws with a phillips screwdriver.
3. Locate the cable that is connected to the battery pack. Unplug the battery pack from the unit.
4. Unhook the Velcro straps that secure the battery pack into the battery pack tray.
5. Remove the old battery pack.

   NOTE: Check with local environmental and recycling agencies for the proper disposal of sealed lead-acid batteries (SLA).

6. Install new battery pack and secure with Velcro straps into the battery pack tray.
7. Plug the new battery pack in to the unit.
8. Reinstall the lower front cover.
9. Allow the batteries to charge a full 24 hours by having unit plugged into mains power.

DRAFT

13.4 Replacing the Screen Internal Battery

The internal battery in the screen is critical for proper operation of the sampler. This battery is used to store the configuration of the unit and when it is depleted this information could be lost.

When the battery is low and needs replaced, the following message will apprear on the screen:

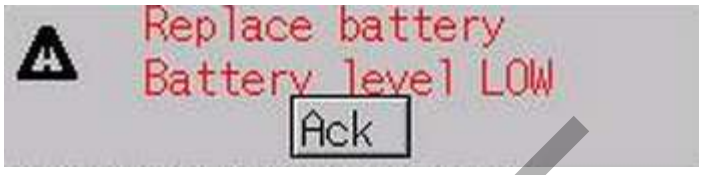

Also, an alarm will be shown in the history log that the internal screen battery needs replaced.

The battery is a standard CR2032 3.3V lithium Ion battery manufactured by several companies such as Duracell, Energizer, Sony and Panasonic. The Tisch Environmental part number for this battery is a TE-W-215.

To replace the internal screen battery, perform the following:

WARNING – Before opening covers to perform maintenance, ensure unit is powered down completely. To power down completely, remove mains power and disconnect the battery at:

MAIN MENU ➔ **MAINTENANCE MENU** ➔ **BATTERY DISCONNECT**

1. Power down the sampler.
2. Remove the upper front cover by removing the 4 screws with a phillips screwdriver.
3. The battery cover is located on the rear of the touchpanel in the center of the screen.
4. Open the battery cover and remove the old battery
5. Replace with a new battery and close the battery cover
6. Reinstall the upper front cover and secure with the 4 screws
7. Power unit on and acknowledge the replace screen battery alarm

NOTE: Check with local environmental and recycling agencies for the proper disposal of Lithium Ion batteries

DRAFT

13.5 Sample Pump Maintenance

The sample pump used in TE-Wilbur is a single head diaphragm pump that is powered by a 24VDC brushless motor.

Pump rebuilds are recommended every 3,000 hours of pump operation or when the pump is making extreme noises or is not pumping the correct air flow.

The part numbers for the pump are as follows:

TE-W-300	Entire sample pump with brushless 24VDC motor and single head diaphragm pump.
TE-W-303	Pump rebuild kit that includes the single head diaphragm pump housing assembly, diaphragm replacement, o-ring, stainless washer and flat-head screw.

Removing the sample pump

The sample pump can be removed by following these steps:

WARNING – Before opening covers to perform maintenance, ensure unit is powered down completely. To power down completely, remove mains power and disconnect the battery at:

MAIN MENU ➔ **MAINTENANCE MENU** ➔ **BATTERY DISCONNECT**

1. Remove the lower front plate using a phillips screwdriver.
2. Unplug the pump control cable from the pump control circuit board, noting the direction of the connector onto the board.
3. Unscrew the two screws holding the sample pump plate into the side of the internal side plate.
4. Remove the pump and pump plate, noting the slot the pump plate end seats into.

DRAFT

Replacing the diaphragm pump

The diaphragm pump can be easily field replaced by following these steps:

Picture showing pump, screwdriver and pump rebuild kit

1. Remove the pump and motor from the pump plate by turning the pump mounting plate over and removing the two screws securing the pump to the pump mounting plate.
2. Using a phillips screwdriver, remove the four screws that secure the pump head to the motor body.

3. Discard old pump head.
4. Now remove the screw that holds the diaphragm on the pump body.

DRAFT

5. Discard the old diaphragm, screw, o-ring and washer.
6. Replace the o-ring and the stainless steel washer that are on the pump shaft.

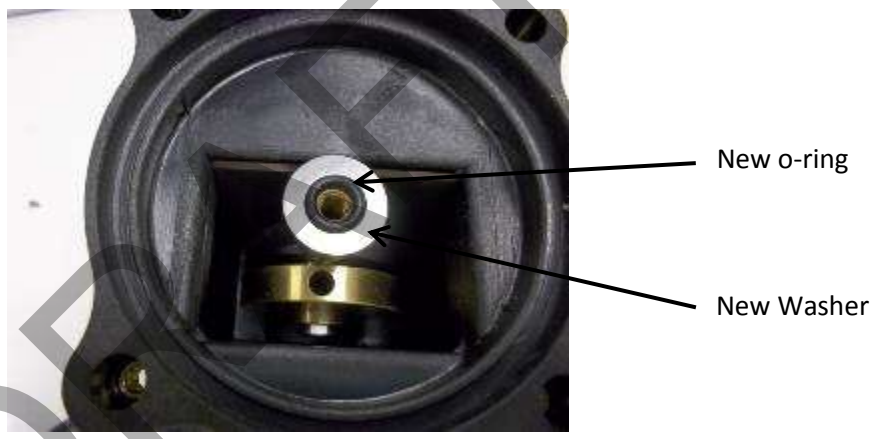

7. Carefully center the motor shaft in the center of the body and press the new diaphragm onto the motor shaft aligning the hole for the screw.

8. Place the new screw into the hole and tighten the screw with the screwdriver.

DRAFT

9. Place the new pump head over the diaphragm and line up the four bolt holes.
10. Tighten the four bolts.

Inserting the pump back into the unit

The pump can be easily inserted back into the unit by following these steps:

1. Make sure the pump is mounted on the pump bracket.
2. Note the slot that is located on the left inside of the enclosure, the ear of the pump plate gets inserted into this slot.
3. Secure the pump plate with the two 8-32 stainless steel bolts.
4. Place lower front cover back in place and secure with 4 bolts.

DRAFT

13.6 Filter Holder Maintenance

The filter holder is maintenance free with the exception of tightening or loosening the mechanism if the system should become loose or is having an issue passing a leak check.

There are o-rings on the top and bottom mate pieces that seal the filter cassette, inspect these for wear or damage if there appears to be a leak. Replace if needed. Tisch Environmental part number TE-W-FH6 for (2) filter holder o-rings.

To replace the filter holder o-rings:

- Remove the filter holder from the enclosure by removing the downtube, the four bolts on the filter holder plate and disconnecting the sample tubing to remove the filter holder from the enclosure.
- Remove the 6 screws on the top of the filter holder to remove the top mate piece.
- The o-ring can be removed with a small thin flat-blade screwdriver by pushing the screwdriver into the o-ring groove and prying the o-ring from the groove.
- Replace with a new o-ring and push the o-ring into the grove with your finger, ensure it gets seated entirely.
- Using the small thin flat-blade screwdriver pry the bottom mate o-ring from the groove.
- Replace with a new o-ring and push the o-ring into the grove with your finger, ensure it gets seated entirely.
- Place top mate back on top of the filter holder aligning the 6 holes and secure with the 6 bolts.

The filter holder should be cleaned on a monthly basis to keep stray particulate matter from affecting sampling results. The inside of the bottom and top mate and the top tube can be cleaned with distilled water or a general purpose cleaner and a soft cloth.

See section 4.4, adjusting the filter holder for information on making adjustments to the filter holder mechanism.

DRAFT

13.7 UPS System Replacement

If the UPS needs replaced, perform the following:

The part number for the UPS module is TE-W-201.

WARNING – Before opening covers to perform maintenance, ensure unit is powered down completely. To power down completely, remove mains power and disconnect the battery at:

MAIN MENU	➔	MAINTENANCE MENU	➔	BATTERY DISCONNECT

1. Remove both the upper and lower left plates using a phillips screwdriver.
2. The UPS module is located in the top left corner on the rear plate.

UPS Module
TE-W-201

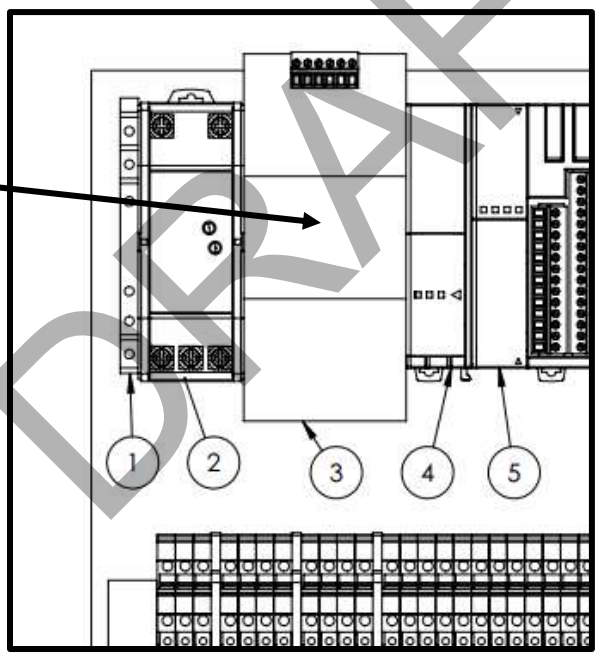

3. There are wires that enter on the top of the UPS and on the bottom of the UPS.
4. On top there are (4) wires on TB2 terminals 1 through 4 that are the alarm outputs for battery fail and battery discharge that route over to the controller. Label each of these wires and unscrew the terminals and remove the (4) top wires.

DRAFT

5. On the bottom of the UPS there are (4) wires on TB1, 2 wires for DC+ and DC- and 2 wires for Battery + and Battery -. Label each of these wires and unscrew the terminals and remove the (4) bottom wires.

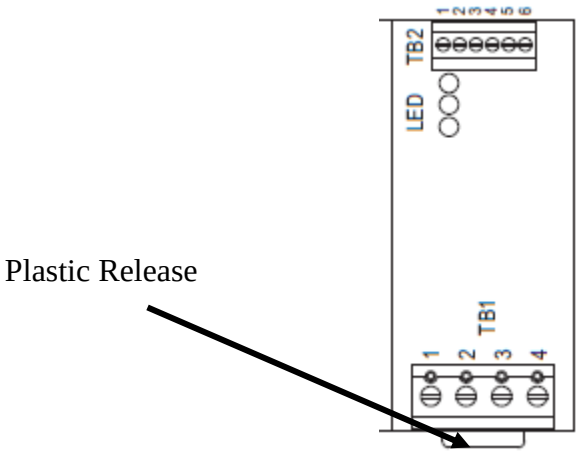

Terminal Pin No. Assignment (TB1)

Pin No.	Assignment
1	BATTERY INPUT +
2	BATTERY INPUT -
3	DC INPUT -
4	DC INPUT +

Terminal Pin No. Assignment (TB2)

Pin No.	Assignment
1	BAT DISC 1
2	BAT DISC 2
3	BAT FAIL 1
4	BAT FAIL 2
5	DC OK 1
6	DC OK 2

} Not used

6. Notice the plastic release at the very back, on the bottom of the UPS module. Using a flat-head screwdriver push this lip downward, releasing the UPS module from the DIN rail. Tilt the module towards you and remove from the enclosure.
7. To install a new UPS module, you must first hook the top onto the DIN rail, then push downward to secure the UPS module onto the DIN rail. You will hear and feel a 'click' as the UPS module is seated onto the DIN rail properly.
8. Reattach the wires on TB1 and TB2 (4) wires on each top and bottom terminals.
9. Reinstall the upper and lower front panel and power unit on.
10. Test the UPS by connecting charged batteries and disconnecting power. The UPS should switch and run on the batteries.

DRAFT

13.8 Power Supply Replacement

If the 24VDC power supply needs replaced, perform the following:

The part number for the power supply is TE-W-202.

WARNING – Before opening covers and maintaining unit, ensure unit is powered down completely. To power down completely, remove mains power and disconnect the battery at:

MAIN MENU	➔	MAINTENANCE MENU	➔	BATTERY DISCONNECT

1. Remove both the upper and lower left plates using a Philips screwdriver.
2. The power supply is located at the top on the rear plate between the controller and UPS module.

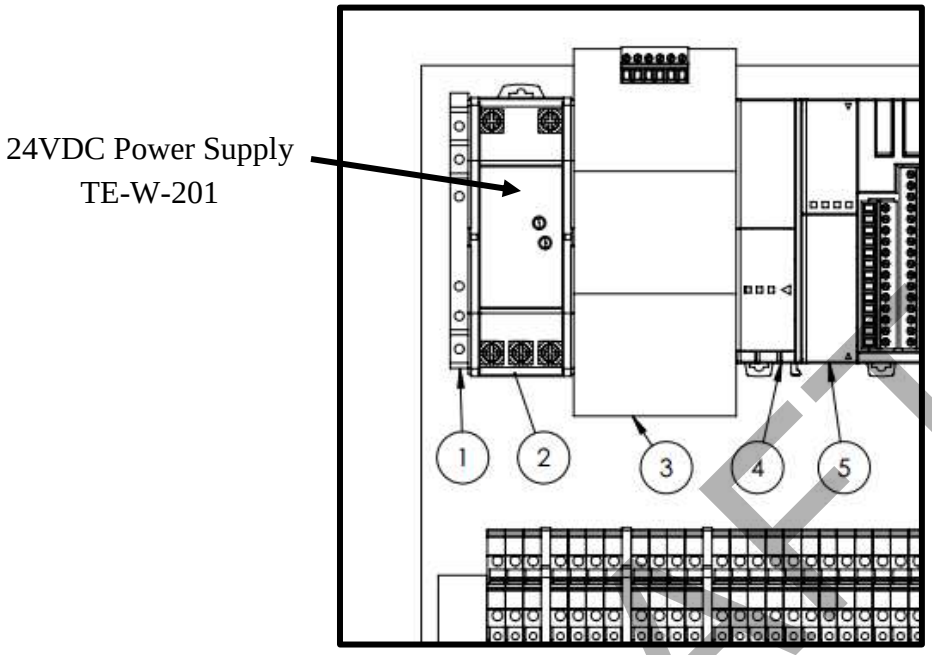

3. There are wires that enter on the top of the power supply and on the bottom of the power supply.

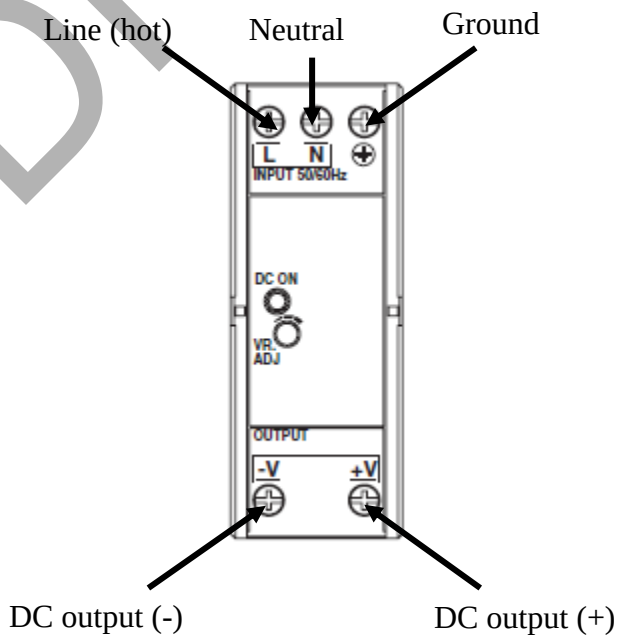

DRAFT

4. On top there are (3) wires on top for Line Voltage (hot), Neutral and Ground. These will be colored black, white and green respectively. Unscrew the terminals and remove the (3) top wires.
5. There are (2) wires on the bottom for DC output (+) and (-), label these and unscrew the terminals and remove the bottom (2) wires.
6. The Power supply has a plastic clamp on the bottom at the rear of the unit that is used to attach the unit to the DIN rail. Using a small flat-blade screwdriver insert the blade into the hole on the clamp and push downwards. The clamp will 'click' into the open / downward position.

Removal

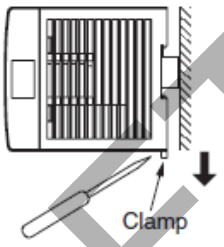

7. Now the power supply can be removed by tilting upwards and removing from the DIN rail.
8. To insert a new power supply, the top notches must be attached to the DIN rail first, then push the bottom towards the DIN rail until the unit 'clicks' into place.

Mounting

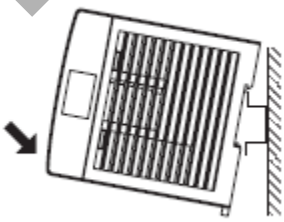

9. Reinstall the (3) top wires for the hot, neutral and ground by placing the wire into terminal and screwing tight with screwdriver.
10. Reinstall the (2) bottom wires for the DC output.
11. Now that the power supply is installed and wired, it must be checked for proper voltage.
12. Turn on the unit. The power supply light on the front should be on and green, noting proper operation. If this light is not on check all wiring.
13. Place a DC voltage meter on the DC output of the power supply, red on positive and black on negative.

DRAFT

14. The voltage of the power supply needs to be set at around 27 volts. Read the voltage on the voltage meter, if the voltage is not 27 volts the voltage must be adjusted.

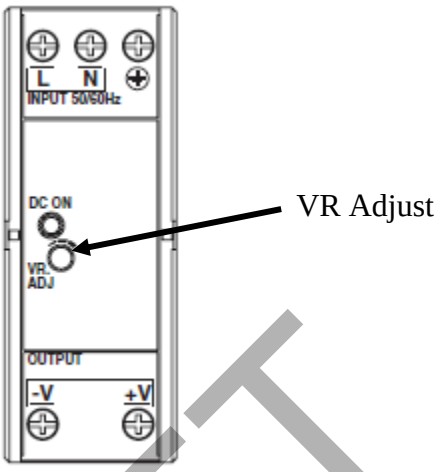

15. To adjust the voltage, turn the VR Adjust knob clockwise to increase and counter-clockwise to decrease. Set the voltage of the power supply at 27.0 volts. This voltage is necessary to provide proper charging voltage for the batteries.
16. Reinstall the upper and lower front panel and power unit on.

13.9 Controller Replacement

If the Programmable Logic Controller needs replaced perform the following:

The part number for the PLC is made up of the following modules:

TE-W-101	Main Controller Module
TE-W-102	Analog input module
TE-W-103	Analog input / output module
TE-W-104	Modbus communication module

WARNING – Before opening covers to perform maintenance, ensure unit is powered down completely. To power down completely, remove mains power and disconnect the battery at:

MAIN MENU	➔	**MAINTENANCE MENU**	➔	**BATTERY DISCONNECT**

DRAFT

1. Remove both the upper and lower left plates using a Phillips screwdriver.
2. The controller is located at the top on the rear plate on the right side.

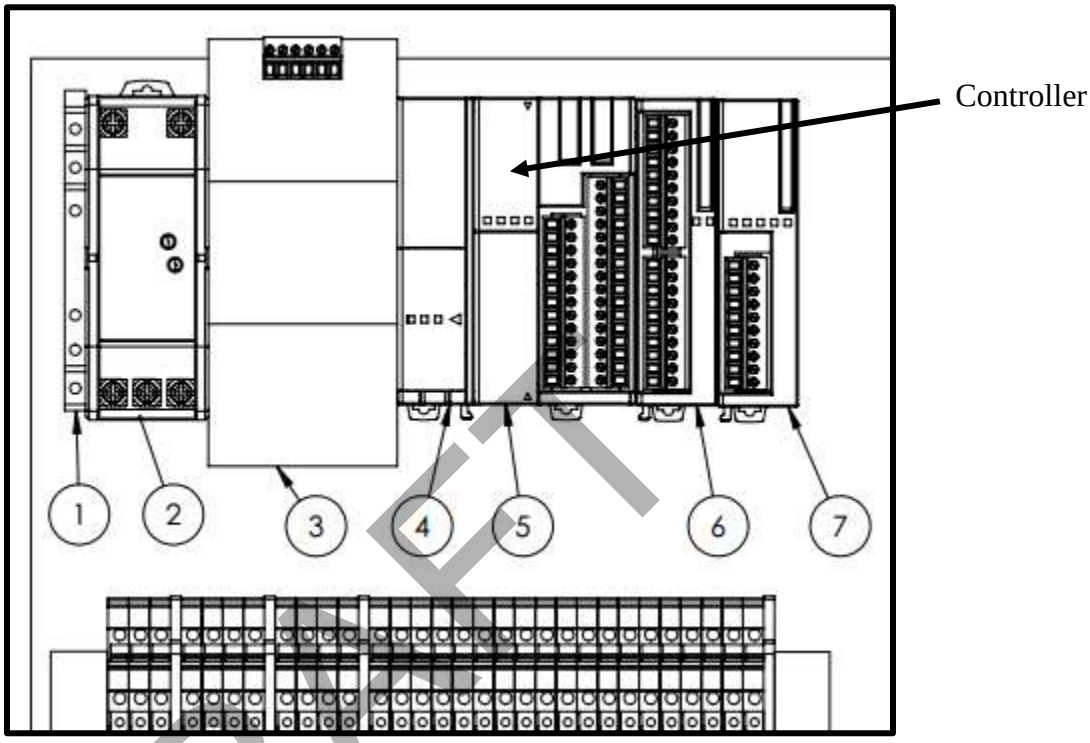

3. Unplug the cable from the screen.
4. There are two wires that enter the controller at the bottom for DC power, label these wires and remove them.

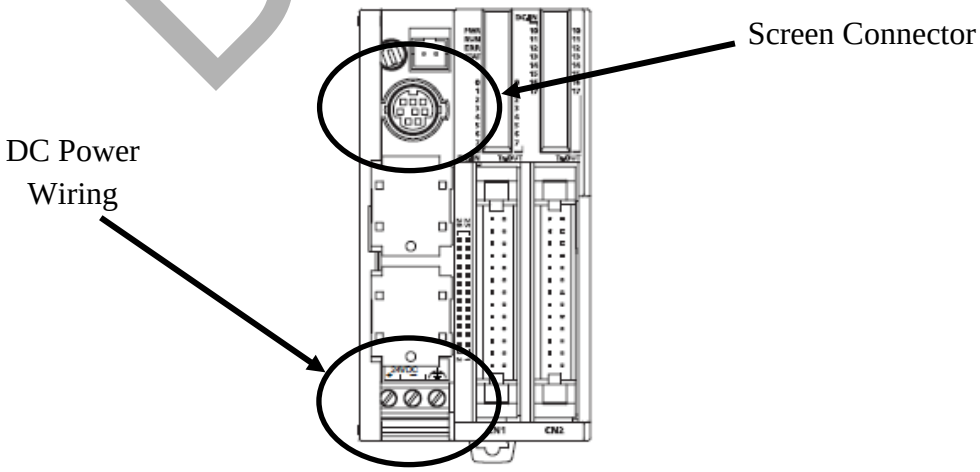

DRAFT

5. The wiring of the Modbus module must now be removed. The Modbus module is located here:

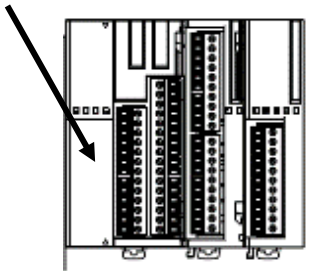

6. The Modbus module has (2) wires, label each wire and remove them by unscrewing the terminal and removing the wire.
7. The rest of the wiring is modular and can be removed by grasping each terminal block in the center and pulling straight out.
8. Now that all the wiring is removed, notice the clamps at the bottom of the controller. There are (3) of them.

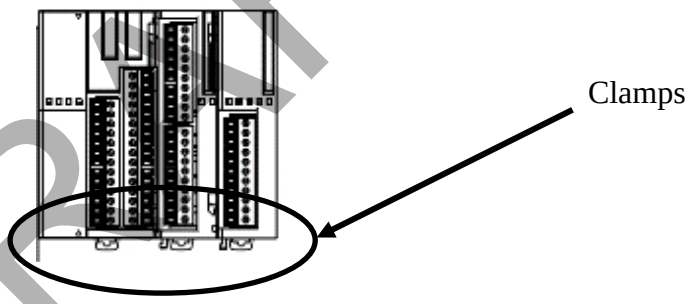

9. Using a small flat-blade screwdriver insert the blade into the hole on the clamp and push downwards. The clamp will 'click' into the open / downward position.

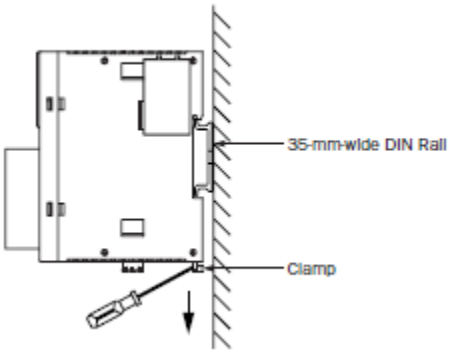

DRAFT

10. Now the controller can be removed by tilting upwards and removing from the DIN rail.
11. The controller consists of (4) modules:

TE-W-101	Main Controller Module
TE-W-102	Analog input module
TE-W-103	Analog input / output module
TE-W-104	Modbus communication module

12. Each module can be removed or replaced individually. Notice the latch in the center of the modules. When the latch is in the downward position, the modules can be pulled apart. When the latch is in the upward position the modules cannot be pulled apart.

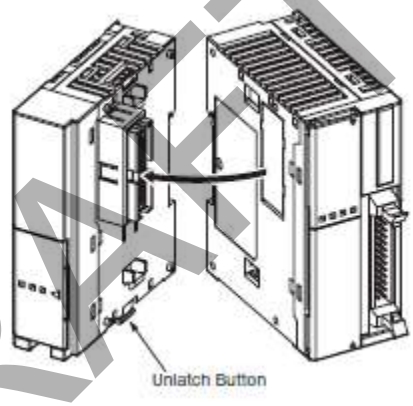

13. Replace each module or entire controller assembly as required. When modules are all put back together, ensure all the latches are in the upward position.
14. Place the controller assembly onto the DIN rail. The top must first be attached, then the bottom can be pushed onto the DIN rail until a 'click' is heard denoting the controller is properly seated onto the DIN rail.

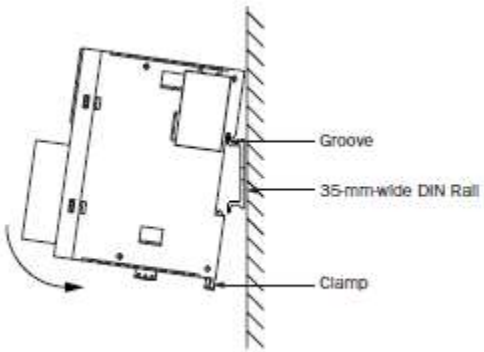

DRAFT

15. Once the controller is seated on the Din rail properly you must now reinstall the wiring.
16. Reinstall the (2) Modbus wires onto the Modbus module securing by tightening the terminal screw.
17. Reinstall the (2) DC Power wires onto the controller securing by tightening the terminal screw.
18. Reinstall the (5) connectors in their proper locations on the controller assembly.
19. Plug the communication cable from the screen back into the controller port on the front.
20. Reinstall the upper and lower front panels and power unit on.

13.10 Flowmeter Replacement

If the thermal mass flowmeter needs replaced, perform the following:

The part number for the thermal mass flowmeter is TE-W-150.

WARNING – Before opening covers to perform maintenance, ensure unit is powered down completely. To power down completely, remove mains power and disconnect the battery at:

MAIN MENU	➔	MAINTENANCE MENU	➔	BATTERY DISCONNECT

1. Remove both the upper and lower left plates using a Phillips screwdriver.
2. The thermal mass flowmeter is located on the inside right wall (center divider) of the enclosure.
3. Unplug the connector on the flowmeter by pushing down on the tab on top and pulling outwards.

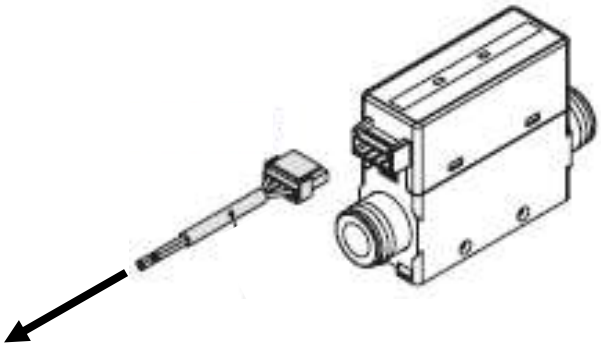

DRAFT

4. The flowmeter has a 17mm twist-nut for the process connection. You will need to hold the 17mm nut as you turn the compression fitting with a 9/16 wrench to loosen the compression fitting.
5. Loosen each compression fitting and disconnect the entry and exit tubing from the flowmeter.
6. Remove the two screws and nuts that secure the flowmeter to the sidewall.
7. Remove flowmeter.
8. Remove the compression fittings from the old flowmeter and install in the new flowmeter – make sure to use thread tape on the threads to ensure a leak-free seal.
9. Place new flowmeter in place and secure to the sidewall with the screws and nuts.
10. Connect the entry and exit tubing and tighten 1 and ¼ turns after the compression fitting is finger tight.
11. Plug connector back into flowmeter.
12. Reinstall the upper and lower front panels and power unit on.
13. See section 7.5 to perform a calibration of the flow system.

13.11 Pressure Sensor Replacement

If the pressure sensor needs replaced, perform the following:

The part number for the pressure sensor is TE-W-153.

WARNING – Before opening covers to perform maintenance, ensure unit is powered down completely. To power down completely, remove mains power and disconnect the battery at:

MAIN MENU	➔	MAINTENANCE MENU	➔	BATTERY DISCONNECT

1. Remove both the upper and lower left plates using a Phillips screwdriver.
2. The pressure sensor is located on the inside right wall (center divider) of the enclosure. It is downstream of the flowmeter.
3. Remove the compression fittings on the tee that the flowmeter is screwed into using a 9/16 wrench and disconnect the entry and exit tubing.

DRAFT

4. Remove the (2) screws that secure the clamp that secures the pressure to the sidewall of the enclosure.
5. Unplug the pressure sensor connector and remove the pressure sensor.
6. Remove the tee from the old pressure sensor and install on the new pressure sensor. Use thread tape on the male thread of the new pressure sensor to ensure a leak-free seal.

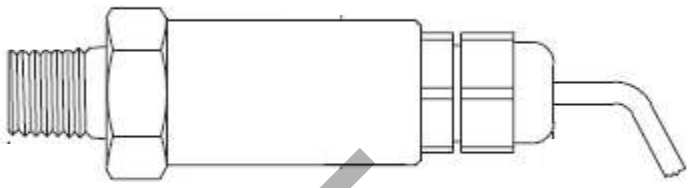

7. Install the new pressure sensor on the sidewall with the clamp and screws.
8. Plug pressure into pressure sensor connector.
9. Reinstall upper and lower left panels and turn power on.
10. Refer to section 7.8 to zero the pressure sensor.

13.12 Barometric Pressure Sensor Replacement

If the barometric pressure sensor needs replaced, perform the following:

The part number for the barometric pressure sensor is TE-W-154.

WARNING – Before opening covers to perform maintenance, ensure unit is powered down completely. To power down completely, remove mains power and disconnect the battery at:

MAIN MENU	➔	MAINTENANCE MENU	➔	BATTERY DISCONNECT

1. Remove both the upper and lower left plates using a Phillips screwdriver.

DRAFT

The barometric pressure sensor is located on the back of the panel towards the right side and attached to the back panel with a stainless steel strap.

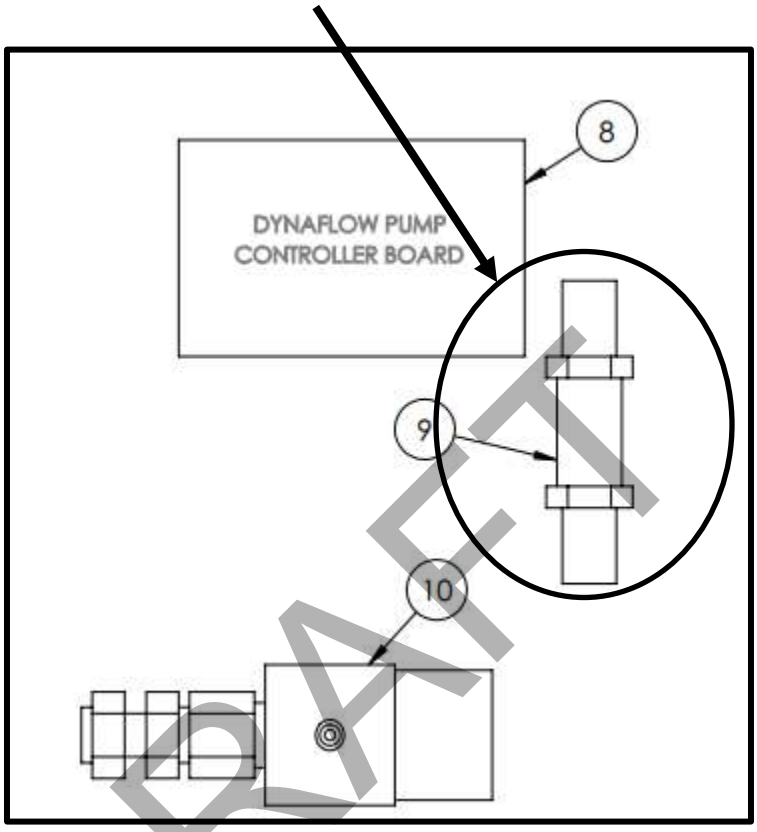

DRAFT

2. Remove the wires on terminal 9, 10 and 11. They should be white, black and red respectively.
3. Remove the 8-32 screw securing the clamp to the back panel.
4. Remove the barometric pressure sensor.
5. Install new barometric pressure sensor and secure to the back panel with the clamp and screw.
6. Terminate the white wire on terminal 9, the black wire on terminal 10 and the red wire on terminal 11.
7. Reinstall the upper and lower left panels and power unit on.
8. See section 7.3 to perform a full calibration of the new barometric pressure sensor.

13.13 Filter Temperature Probe Replacement

If the filter temperature probe needs replaced, perform the following:

The part number for the filter temperature probe is TE-W-152.

1. Unplug the filter temperature probe connector.
2. Unscrew the filter temperature probe from the thermowell on the filter holder.
3. Install new filter temperature probe and connect to filter temperature connector.
4. Acknowledge the filter temperature probe was unplugged alarm.
5. See section 7.2 to perform a calibration of the filter holder temperature sensor.

Illustration showing filter temperature probe

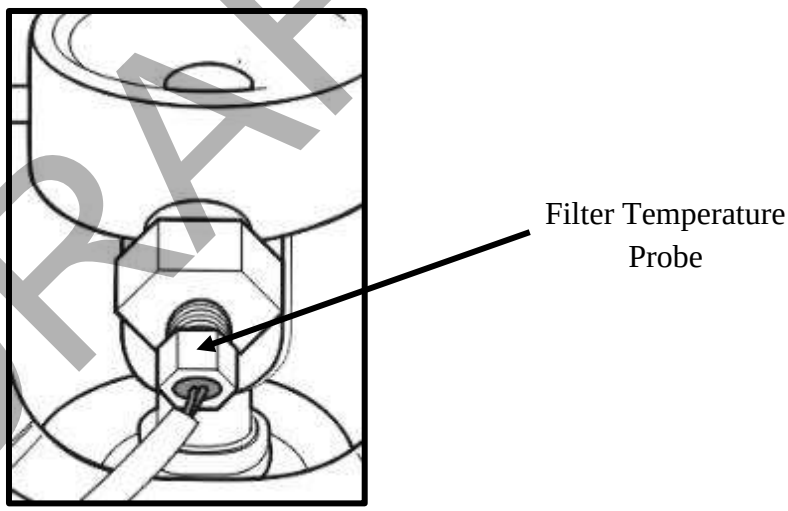

DRAFT

13.14 Ambient Temperature Replacement

If the ambient temperature probe needs replaced, perform the following:

The part number for the ambient temperature probe with radiation shield is TE-W-151.

1. Unplug the ambient temperature probe from the connector located on the left side of the enclosure.

2. Remove the (2) 1/4-20x5/8" bolts that secure the radiation shield bracket to the enclosure.

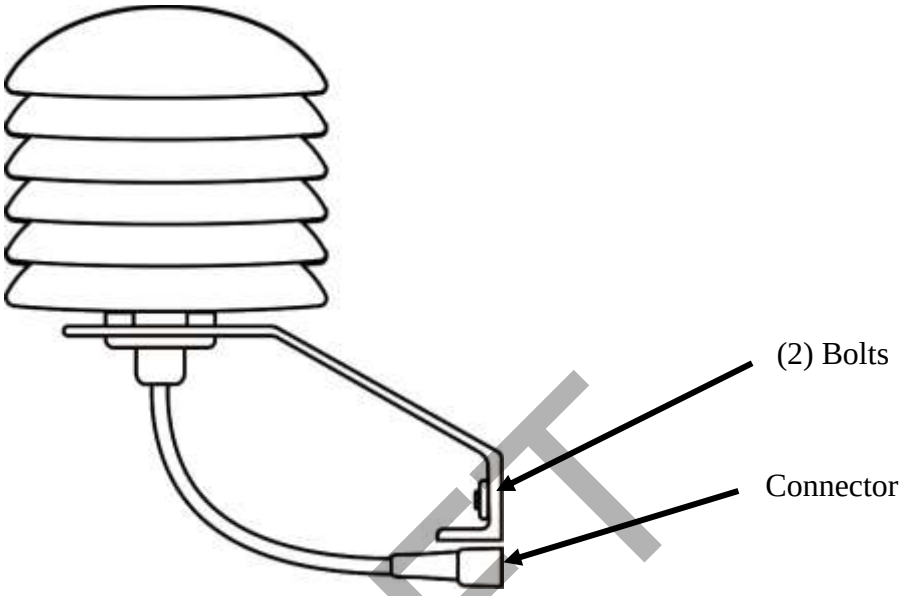

3. Install new radiation shield with ambient temperature probe onto the enclosure with the (2) bolts.
4. Plug the temperature probe into the socket on the left side of the enclosure.
5. Acknowledge the ambient temperature probe was unplugged alarm.
6. See section 7.1 to perform a calibration of the ambient temperature sensor.

DRAFT

13.15 Solenoid Replacement

If the solenoid needs replaced, perform the following:

The part number for the solenoid is TE-W-212.

WARNING – Before opening covers to perform maintenance, ensure unit is powered down completely. To power down completely, remove mains power and disconnect the battery at:

MAIN MENU	➔	MAINTENANCE MENU	➔	BATTERY DISCONNECT

1. Remove both the upper and lower left plates using a Phillips screwdriver.

The solenoid is located on the back of the panel towards the bottom right side

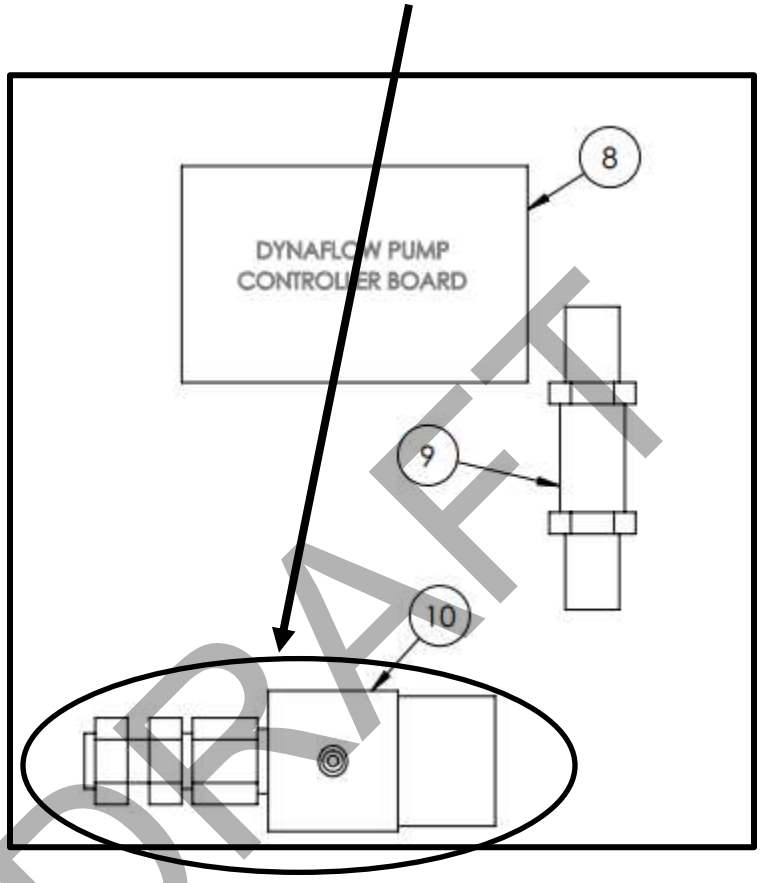

DRAFT

2. Remove the compression fittings from the inlet and outlet using a 9/16” wrench.
3. Remove the wiring on terminals (3) and (-) of the solenoid.
4. Remove the two screws that secure the solenoid to the back panel and remove the solenoid.
5. Remove the compression fittings from the solenoid.
6. Install the compression fittings onto the new solenoid using thread tape on the connector threads to ensure a leak-free seal.
7. Install the new solenoid onto the back panel using the two screws.
8. Wire the solenoid to terminals (3) and (-) **NOTE:** there is no concern with polarity either wire from the solenoid can be terminated on either terminal.

9. Connect the compression hose fittings to the inlet and outlet of the solenoid.
10. Reinstall the upper and lower right plates and turn power on.

13.16 Pump Controller Replacement

If the pump controller needs replaced, perform the following:

The part number for the pump controller is TE-W-301with the TE-W-302 pump controller cable.

WARNING – Before opening covers to perform maintenance, ensure unit is powered down completely. To power down completely, remove mains power and disconnect the battery at:

MAIN MENU	➔	MAINTENANCE MENU	➔	BATTERY DISCONNECT

1. Remove both the upper and lower left plates using a Phillips screwdriver.

The pump controller is located on the back of the panel towards the bottom left side.

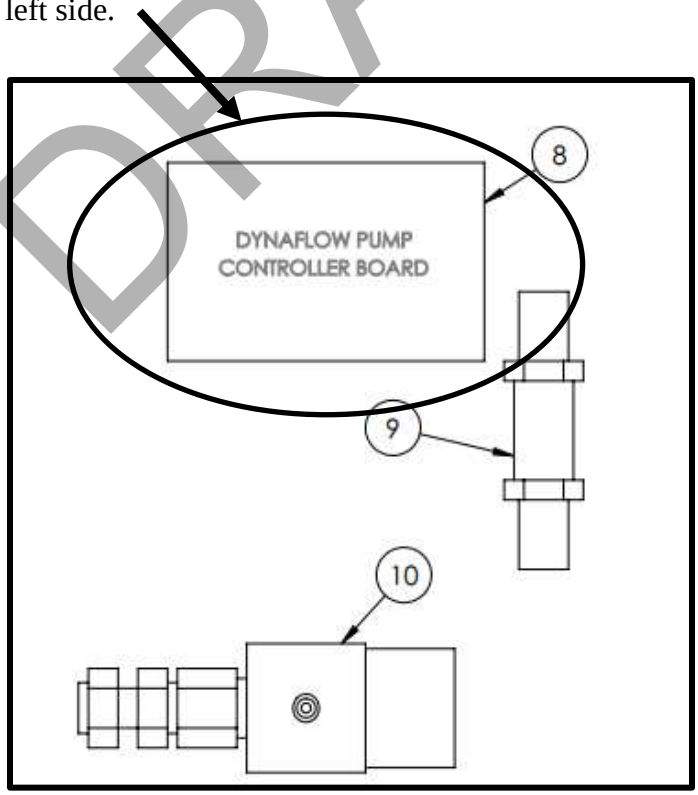

DRAFT

2. There are (3) connectors on the pump controller board, one for 24VDC, the pump connection and the other for the control signal. Unplug the three connectors.

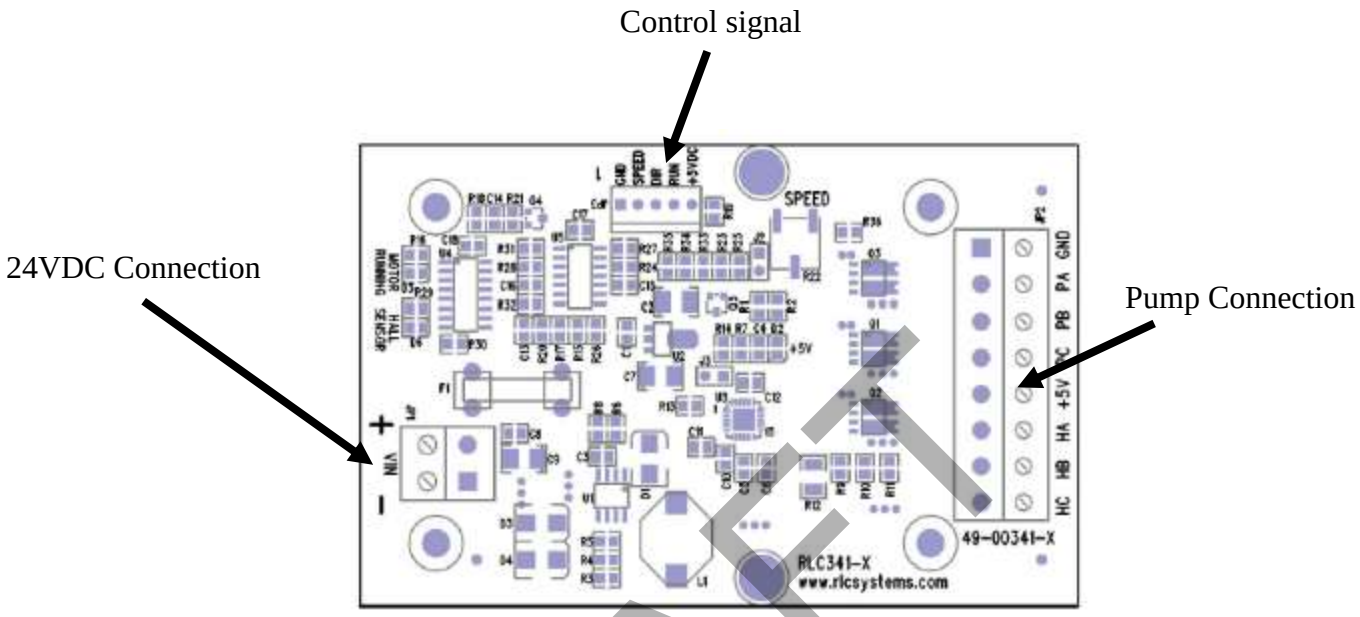

3. Remove the (4) 6-32x3/8" screws that secure the board to the back panel.
4. Install a new pump controller board and secure with the (4) screws.
5. Plug connectors back into board.
6. Reinstall the upper and lower fronts panel and power unit on.

DRAFT

13.17 Touch Screen Replacement

If the touch screen needs replaced, perform the following:

The part number for the touch screen is TE-W-100 with the following related part numbers:

TE-W-106	32MB SD Card
TE-W-105	Cable from screen to controller
TE-W-207	USB interconnection cable
TE-W-216	3ft RJ45 patch cable

WARNING – Before opening covers to perform maintenance, ensure unit is powered down completely. To power down completely, remove mains power and disconnect the battery at:

MAIN MENU	➔	**MAINTENANCE MENU**	➔	**BATTERY DISCONNECT**

1. Remove both the upper and lower left plates using a Phillips screwdriver.
2. Turn the upper plate over and disconnect the following connectors on the screen:

   The 24VDC power to the screen
   The communication cable to the controller
   The Ethernet cable
   The USB interconnect cable

3. Remove the SD card from the side by pressing it in to eject, then pulling out completely.

DRAFT

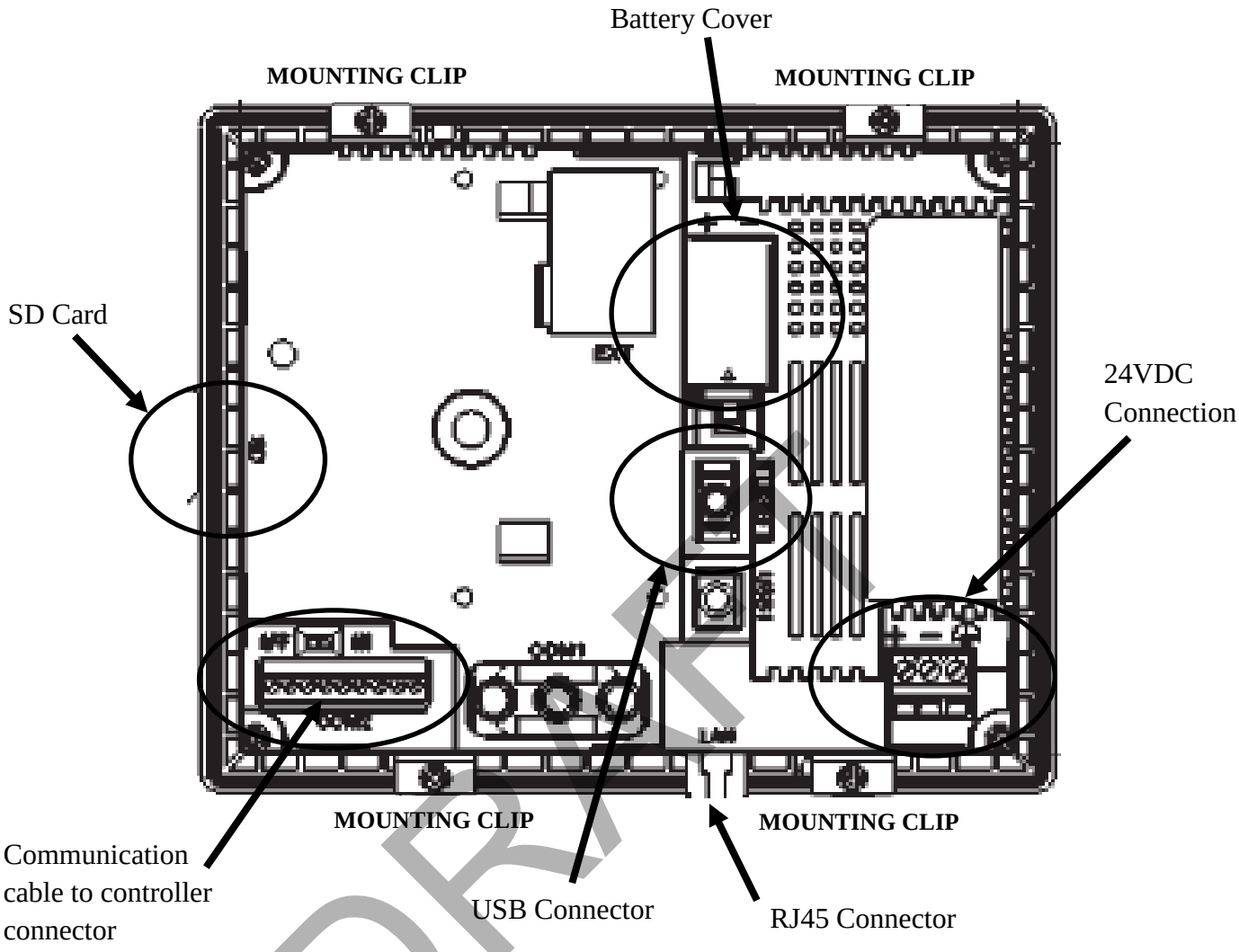

DRAFT

4. Using a Phillips screwdriver, unscrew the (4) mounting clips. There are two on the top and two on the bottom of the screen.

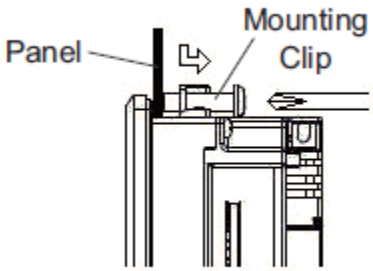

5. The mounting clips will snap out of the slots on the screen. Snap out all four of the mounting clips and pull the screen out of the upper front panel from the front.

6. Label the wires on the 24VDC power connection. Unscrew the terminal screws and remove the wires from the 24VDC connection along with the connector.

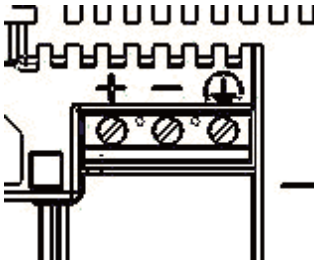

7. Install the 24VDC wires and connector onto the new screen by placing wires in their terminal and tightening the terminal screw.
8. Install new screen through the front of the panel and using the clips, secure to the panel.

   NOTE: Do not over tighten the clips, otherwise the screen may warp and cause a wrinkle on the display. These need to be 0.2 to 0.3 N·m of torque.

9. Install the SD card on the side.
10. Connect the 24VDC power connector, communication cable to the controller, USB interconnect cable and Ethernet cable.
11. Reinstall the upper and lower front panels and power unit on.

DRAFT

13.18 Power Button Replacement

If the power button needs replaced, perform the following:

The part number for the power button is TE-W-206.

WARNING – Before opening covers to perform maintenance, ensure unit is powered down completely. To power down completely, remove mains power and disconnect the battery at:

MAIN MENU	➔	MAINTENANCE MENU	➔	BATTERY DISCONNECT

1. Remove both the upper and lower left plates using a Phillips screwdriver.
2. Turn the front panel over and unplug the two connectors that are wired to the power button.
3. Notice the yellow locking lever on the back of the power button, turn this to the left to release the contact blocks from the LED portion of the button.

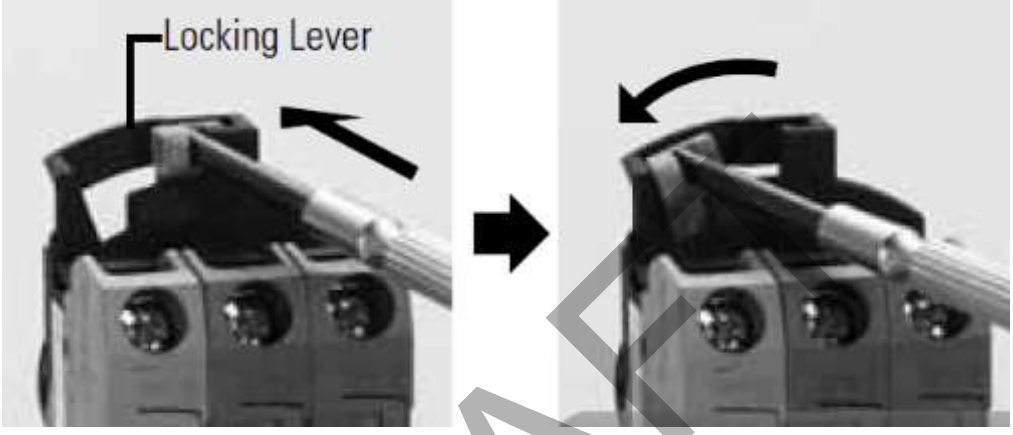

4. On the new pushbutton, remove the contact blocks from the pushbutton housing by performing the same step as above.
5. Remove each wire from the old terminal blocks and place into the new terminal blocks, ensuring each wire is terminated in the same identical terminal location.
6. Now remove the circular LED of the old pushbutton from the panel by using pliers to remove the locking ring and pulling the pushbutton housing out from the front.

DRAFT

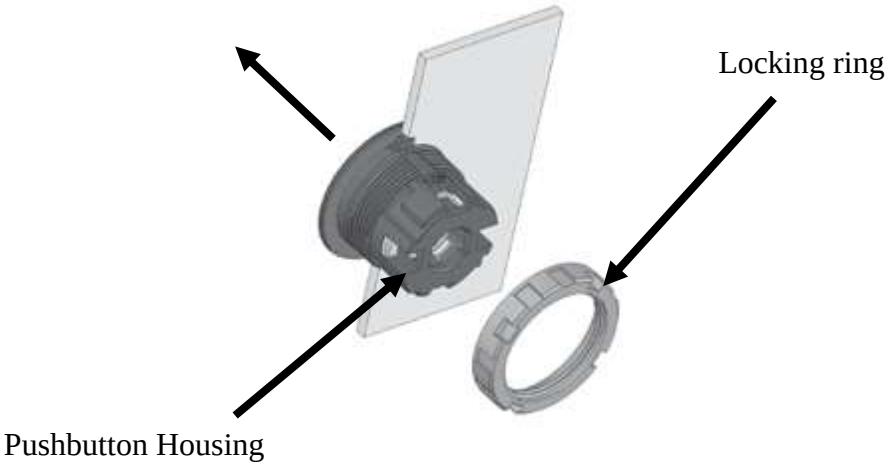

7. Place the new pushbutton housing that you removed the contact blocks from in step 4 into the cutout in the panel, noting the notched hole in the cutout. The notch on the pushbutton must be seated into the notch in the panel cutout.

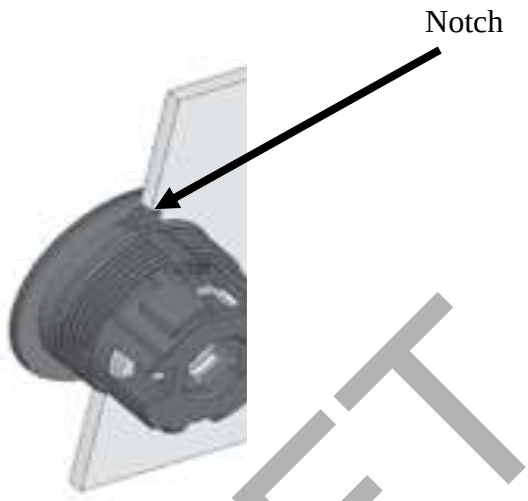

8. Screw on the new locking ring and tighten with pliers. Do not over-tighten as you could strip the plastic threads on the pushbutton.
9. Place the contact blocks onto the pushbutton housing and push the yellow locking lever all the way to the right until you hear and feel a 'click, locking the contact blocks onto the pushbutton housing.
10. Push the button on the pushbutton a few times ensuring proper operation of the switch.
11. Connect the two power in and out connectors.
12. Reinstall the upper and lower front panels and power unit on.

DRAFT

13.19 Power Fail Relay Replacement

If the power fail relay needs replaced, perform the following:

The part number for the power fail relay is TE-W-214.

WARNING – Before opening covers to perform maintenance, ensure unit is powered down completely. To power down completely, remove mains power and disconnect the battery at:

MAIN MENU	➔	MAINTENANCE MENU	➔	BATTERY DISCONNECT

1. Remove both the upper and lower left plates using a Phillips screwdriver.

2. The power fail relay is located on the right side of the rear panel.

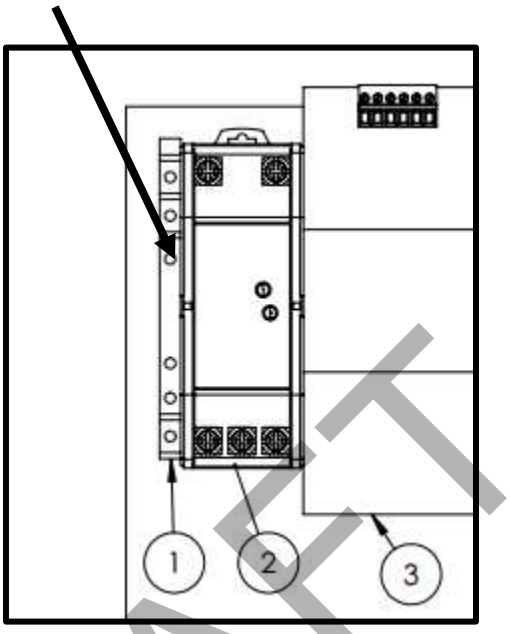

3. Mark the (4) wires that are located on the relay and remove them by pushing down on the slot with a small flat-head screwdriver – the terminals are spring-loaded, so push down and pull the wire out. Remove (4) wires from the power fail relay.

4. The relay can be removed from the DIN rail by placing a small flat-head screwdriver into the plastic slot at the bottom of the relay where it is attached to the DIN rail. Pull this outward and up, unlatching it from the DIN rail.

DRAFT

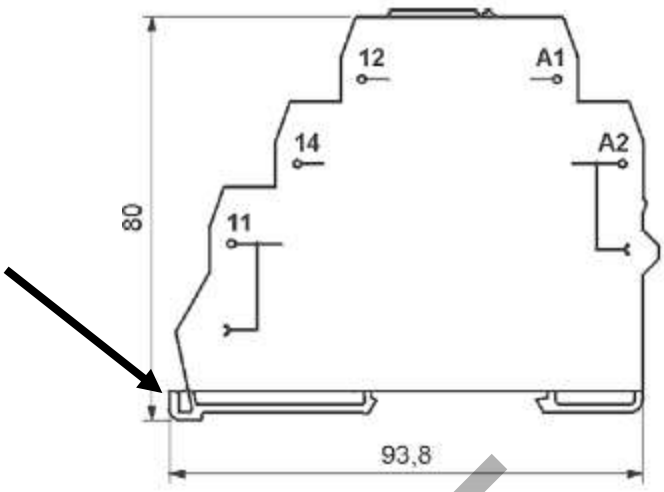

5. Install the new relay onto the DIN rail – it is installed in the same manner as the controller by placing the top part into the DIN rail groove and pushing down until a 'click' is heard and felt.

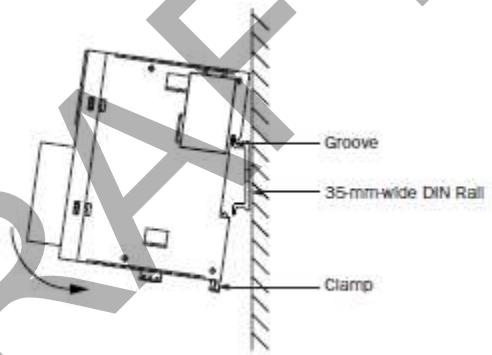

DRAFT

6. Reattach the wires by pushing down on the slot with a small flat-head screwdriver and pushing the wire into the terminal. The wiring diagram is as follows:

Terminal	Connection
A2	Neutral
A1	Hot
11	DC (-)
12	Controller TB1 Terminal 3

7. Reinstall the upper and lower front panels and power unit on.

13.20 Louver Filter Media Replacement

The filter media inside the louvers on the right side of the enclosure will need checked quarterly for buildup of dirt and debris.

The replacement part number for the louver filters are TE-W-232

To replace the louver filter media follow these steps:

1. Using a small flat-blade screwdriver, pry the corner of the louver from the louver housing.
2. The louver cover will snap out of the housing
3. Replace each of the filter louver filter media with new media.
4. Push the louver cover back onto the louver housing, snapping it into place.

DRAFT

14.0 Troubleshooting

This section explains methods to troubleshoot various conditions and alarms with the TE-Wilbur sampler.

WARNING – Maintenance should only be performed by trained individuals. This troubleshooting section assumes the person that is performing the troubleshooting steps is trained to recognize electrical hazards.

WARNING – Some troubleshooting techniques will require that mains power is ON while the front covers are removed. Only an electrically trained person should be performing these tasks and care should be taken to prevent electrical shock at all times.

14.1 Service Locations

For additional assistance, questions or technical support, please contact:

Tisch Environmental
145 South Miami Ave.
Cleves, OH 45002
513.467.9000
sales@tisch-env.com

Visit us on the web for product updates at www.tisch-env.com.

14.2 Electrical System

The electrical system is rated for 120/230VAC at 50/60Hz. The system is transitioned to 24VDC using a 60 watt power supply which in turn powers the system. AC Mains power is switched through the front green LED pushbutton switch. AC power is interrupted from a 1A pushbutton circuit breaker and DC power is interrupted from a 3A fuse.

Condition	Possible Cause	Possible Remedy
Unit will not power on	No AC Mains power	Using a voltage meter, check power on the cord and ensure cord is seated properly in the socket in the side box.

DRAFT

Condition	Possible Cause	Possible Remedy
		Open front cover, if green LED is not ON check voltage on black connector, if voltage is present, check operation of the pushbutton and ensure voltage to the purple connector when button is pressed, replace green LED pushbutton if not functioning properly. If voltage is not present on the black connector and mains power is plugged in, then check the 1A circuit breaker for proper operation.
	No DC power	Check DC operation – ensure AC mains power is present on L and N on the top of the power supply and DC(+) and DC(-) has 27VDC present. If DC power is present and the unit will not power on, check and replace the 3A fuse. If there is AC voltage present on the power supply and no DC voltage from the power supply, disconnect the DC(+) terminal and measure again. If still no voltage replace power supply. If after disconnecting the DC(+) wire and there is 27VDC on the DC(-) and DC(+) terminals, there is a short somewhere between the DC(+) and DC(-) terminals.
Sampler states 'mains power off' but unit is plugged into mains source	Power fail relay needs replaced	Ensure mains power is on and by following steps above. There is a green LED on the front of the relay that indicates the unit is powered. Check to ensure there is AC voltage on terminals A1 and A2 on the power fail relay. Check continuity on terminals 11 and 12. When power is off, these terminals should be closed and when power is on the terminals should be open. If power fail relay is operating properly, check the input to the PLC. The power fail relay is connected to input 3. When mains power is off the LED on the PLC for input 3 should be ON.

DRAFT

Condition	Possible Cause	Possible Remedy
UPS does not switch to battery during a power failure	UPS defective	Check voltage on DC(+) and DC(-) terminals on UPS, should be 27VDC. Check the battery (+) and (-) terminals, these should also be 27VDC. Disconnect battery pack and measure voltage from the battery pack. This should be 24VDC. Replace UPS.
System does not stay powered during loss of mains power	Battery pack needs replaced	Turn off mains power and measure the voltage on the Battery (+) and (-) terminals. This should be 24VDC. Ensure the battery pack is fully charged by leaving it plugged in for 24 hours. Ensure when mains power is on that the voltage on the Battery (+) and (-) terminals is 27VDC, this is necessary to properly charge the batteries. Replace battery pack.

DRAFT

14.3 Touchscreen Troubleshooting

The touchscreen is TE-Wilbur part number TE-W-100. The touchscreen is powered from the DC power supply and connects to the PLC via a communication cable. The screen has an internal SD card that is located on the left side when looking at the rear of the screen.

Condition	Possible Cause	Possible Remedy
No display	No DC power to screen	Check voltage on connector to the screen. Should be 27VDC. Check green LED on front of screen, should be ON when voltage is present. Replace screen.
Message stating battery	Internal battery	Replace internal battery.

low	needs replaced	
Condition	**Possible Cause**	**Possible Remedy**
Message stating Host communication lost	Communication to PLC has stopped	Check cable from the screen to the PLC and ensure it did not become unseated on both ends. Check to ensure the PLC is in run mode by observing the LED on the PLC. Update firmware of both screen and PLC. Replace screen and or PLC.
USB does not function	USB stick not working	Try a different make and model of USB stick. Check to ensure the USB interconnect cable is plugged into the screen and is seated into the socket. Update firmware of screen. Remove DC power from screen (reboot screen) by unplugging the screen power connector. Replace screen.
Graphics are missing on screen and logs are not working	SD Card is not functioning	The SD card is located on the left side as you are looking at the rear of the touchscreen. Ensure the SD card is seated properly by pushing in and pulling out. Replace SD card. Update firmware. Replace screen.

DRAFT

14.4 Flowmeter

The flowmeter is a TE-Wilbur part number TE-W-150. The flowmeter is a thermal mass type that is ranged 0-25 Lpm and provides a 4/20mA analog output to the PLC for flow indication. The flowmeter is powered from the DC power supply.

Condition	Possible Cause	Possible Remedy
No flow when pump is running or alarm that flowmeter is failed	Cable unplugged	Check the cable that connects to the flowmeter and ensure it is seated properly.
	Flowmeter failed	There is an indicator light on the top of the flowmeter that will blink green when flow is present and red when a failure occurs. Check that there is 27VDC on terminals 5(+) and 6(-) which is the power for the flowmeter. Remove the wire from terminal 4 (signal) and place a current meter that can measure mA signals in series from the wire to the terminal. When flow is traveling through the flowmeter there should be a proportional 4-20mA signal through this signal wire. If 4-20mA signal is present and working, then replace the analog card on the PLC. Replace flowmeter.
	No flow	Check all pneumatic connections to the flowmeter to ensure there is air flow through the flowmeter sensor. Replace flowmeter.

DRAFT

14.5 Barometric Pressure

The barometric pressure sensor is a TE-Wilbur part number TE-W-154. The barometric pressure sensor is a highly accurate sensor that is powered from the DC power supply and provides a 4/20mA signal proportional to the range of the barometric pressure. The range of the sensor is 450 to 1238 mmHg.

Condition	Possible Cause	Possible Remedy
Wrong or no reading of barometric pressure or alarm that sensor has failed	Sensor unplugged	Check the cable that connects to the barometric pressure sensor and ensure it is connected properly onto the terminal strip at the following terminal locations: White wire (signal) – Terminal 9 Black wire (Ground) – Terminal 10 Red wire (Supply) – Terminal 11
	No Voltage	Check to make sure there is 27VDC on terminals 11(+) and 10(-).
	Sensor or PLC input card failed	Remove the wire from terminal 9 (signal) and place a current meter that can measure mA signals in series from the wire to the terminal. At standard barometric pressure of 760mmHg the sensor should be outputting around 5mA. If 4-20mA signal is present and working, then replace the analog card on the PLC. Replace Barometric pressure sensor.

DRAFT

14.6 Temperature Sensors

The ambient temperature probe, part number TE-W-151, and the filter temperature probe, part number TE-W-152, are both the same types of probes so troubleshooting steps apply to both the ambient and filter temperatures. The probes are PT100 RTDs (Resistive Temperature Devices). When at 0ºC the resistance of the probe will be 100Ω and as temperature increases and decreases, the resistance of the probe will increase and decrease respectively. The probes are highly accurate when used for measuring ambient conditions and are very linear throughout their temperature range.

Condition	Possible Cause	Possible Remedy
No reading or alarm that sensor is unplugged or failed	Sensor unplugged	Ensure the connector for the probe is seated properly.
	Sensor failed	Measure the resistance on terminals 13 and 14 for the ambient temperature and 15 and 16 for the filter temperature. See the PT100 lookup table to verify the correct resistance versus temperature.

ºC Resistance of PT100 Temperature Sensor

-40	84.27	83.87	83.48	83.08	82.69	82.29	81.89	81.50	81.10	80.70	80.31	-40
-30	88.22	87.83	87.43	87.04	86.64	86.25	85.85	85.46	85.06	84.67	84.27	-30
-20	92.16	91.77	91.37	90.98	90.59	90.19	89.80	89.40	89.01	88.62	88.22	-20
-10	96.09	95.69	95.30	94.91	94.52	94.12	93.73	93.34	92.95	92.55	92.16	-10
0	100.00	99.61	99.22	98.83	98.44	98.04	97.65	97.26	96.87	96.48	96.09	0
0	100.00	100.39	100.78	101.17	101.56	101.95	102.34	102.73	103.12	103.51	103.90	0
10	103.90	104.29	104.68	105.07	105.46	105.85	106.24	106.63	107.02	107.40	107.79	10
20	107.79	108.18	108.57	108.96	109.35	109.73	110.12	110.51	110.90	111.29	111.67	20
30	111.67	112.06	112.45	112.83	113.22	113.61	114.00	114.38	114.77	115.15	115.54	30
40	115.54	115.93	116.31	116.70	117.08	117.47	117.86	118.24	118.63	119.01	119.40	40

Condition	Possible Cause	Possible Remedy
	Sensor failed	If resistance does not match within 10% replace the sensor. If resistance is correct, but the temperature is still not reading correctly or there is still an alarm for sensor unplugged or failed, replace the PLC analog input/output card.

DRAFT

14.7 Pump system

The pump is a TE-Wilbur part number TE-W-300 with the TE-W-301 pump controller circuit board. The pump is a brushless 24VDC motor with a diaphragm-type pump. The pump is controlled via a pump controller circuit board located inside on the back panel. The pump controller takes a voltage input from the PLC output card that is ranged 1-5 VDC from zero speed to full speed. The pump controller board is also powered from the 24VDC supply.

Condition	Possible Cause	Possible Remedy
Pump will not start	Cable unplugged	Ensure all the connectors on the pump controller are seated properly.
	Controller board pump or analog output card failed	Measure voltage on the 24VDC terminals, should be 27VDC. See Section 12 for diagram of the controller board. Put the pump in manual by selecting on the screen <Maintenance> <Manual Control> and select to run the pump in manual control. Ramp up the pump speed to about 50%. Measure the voltage on the control signal connector – it should be a 2-3VDC. If no voltage is present when in manual mode check all wiring to the PLC card. Replace the PLC analog output card. Make sure the pump cable is seated properly and is in the terminal correctly. Remove and seat again. Try replacing the pump if all signals to the board are working. Replace the controller board if you have 27VDC on the power connection and the PLC is giving a correct output control signal and you have replaced the pump.

DRAFT

14.8 Pressure Sensor

The vacuum pressure sensor is a TE-Wilbur part number TE-W-153. The vacuum pressure sensor used in the TE-Wilbur sampler is ranged 0-15psia vacuum and provides a 4/20mA signal based on vacuum pressure.

Condition	Possible Cause	Possible Remedy
Pressure sensor alarm, cable unplugged or failed	Cable unplugged	Ensure the connector for the pressure sensor is plugged in and seated properly.
	Sensor failed	Ensure there is 27VDC on terminal 7 to DC ground which is the pressure sensor supply voltage.
	PLC input card failed	Using an amp-meter capable of measuring mA disconnect the wire on terminal 8 and place one probe on terminal 8 and one probe on the wire from the pressure sensor you just removed. At no pressure you should have a pressure reading between 4-5mA. If you have no mA reading, replace the pressure sensor. If you have a 4-5mA reading with no pressure you can pressurize the sensor by running the pump in manual mode and restricting the flow. As you restrict the flow you should see the mA output climb. If the mA output is working and the alarm still exists or it is still not reading correctly, replace the analog input card.

DRAFT

14.9 Solenoid

The solenoid is a TE-Wilbur part number TE-W-212.

Condition	Possible Cause	Possible Remedy
Solenoid does not activate during leak check	Ensure pressure is working properly	The solenoid will turn on (Close) when the system pressure exceeds 50" H_2O during a leak check.
	Solenoid failed	Take a jumper wire and place one end on 24VDC and the other end on terminal 3. The solenoid should come on and you should hear a 'click' from the valve closing. If the solenoid does not come on check the wiring. Replace solenoid.
	PLC failed	If solenoid does come on when placing the jumper on terminal 3, check the wiring to the PLC card (outputs right side). When solenoid is supposed to be ON from a leak check being performed and the pressure being greater than 50" the LED for output 4 should be on. Replace PLC card.

14.10 Exhaust Fan

The exhaust fan is a TE-Wilbur part number TE-W-203

Condition	Possible Cause	Possible Remedy
Exhaust fan does not come on when temperature variance is 3 Deg C	Temperature sensor failed	The fan will come on and run for 30 seconds when the temperature variance between ambient and the filter temperature exceeds 3 Deg C. Calibrate the ambient temperature to a false value to achieve a temperature variance of more than 3 degrees to check fan operation.
	Fan failed	Take a jumper wire and place one end on 24VDC and the other end on terminal 2. The fan should come on. Check for 27VDC on the connector to the fan. If the fan does not come on check the wiring. Replace fan.

DRAFT

	PLC failed	If the fan does come on when placing the jumper on terminal 3, check the wiring to the PLC card (outputs right side). When the fan is supposed to be ON the LED for output 4 should be on. Replace PLC card.

14.11 Lighting Strip

The LED lighting strip is TE-Wilbur part number TE-W-59-R for the right side of the enclosure and TE-W-59-L for the left side of the enclosure.

Condition	Possible Cause	Possible Remedy
LED Lights do not come on when button is pressed	LED Lighting failed	Take a jumper wire and place one end on 24VDC and the other end on terminal 1. The lighting strips should come on. Check for 27VDC on the connector to each lighting strip. If the LED lighting strip(s) do not come on check the wiring. Replace lighting strip(s).
	PLC failed	If the LED lighting strips do come on when placing the jumper on terminal 1, check the wiring to the PLC card (outputs right side). When the lighting strip(s) are turned on, the LED for output 3 should be on. Replace PLC card.

DRAFT

14.12 Solar / Alternative Energy

For help with troubleshooting issues with the solar / alternative energy options see section 12.0 Solar and Alternative Energy.

14.13 Communications

For help with troubleshooting communication issues with the TE-Wilbur sampler, see section 15.0 Communications.

15.0 Communications

This section outlines the communication options, configuration and operation available with the TE-Wilbur sampler.

15.1 Introduction

The TE-Wilbur has a built-in RJ-45 Ethernet connection that allows for remote access of the system, a web browser interface and the ability to download data remotely. Also, the TE-Wilbur sampler has a Modbus slave port that allows connection to a telemetry system for remote data logging and viewing and connection to the Tisch Environmental FRM-CAL Calibrator.

15.2 Ethernet Connection

The TE-Wilbur sampler has a standard RJ-45 Ethernet connection that is located in the weatherproof box on the side. This connection is routed through to the touchscreen where the connection is made.

If connection of the sampler is made to a switch, then a standard RJ45 CAT5/6 patch cable can be used.

If connecting this port directly to a PC an RJ45 CAT5/6 crossover cable must be used.

The system is set for a default IP address as follows:

IP Address 192.168.1.123
Subnet Mask 255.255.255.0
No gateway is set

In order to connect to the sampler via the Ethernet port your PC must also be set to the same subnet, for example:

IP Address 192.168.1.124 (notice the IPs cannot be the same)
Subnet Mask 255.255.255.0

In this example the subnet is ‘192.168.1’ and any addresses from 1 to 255 can be used except the ‘.123’ that is being used by the sampler.

DRAFT

To change the IP address / Subnet of the sampler perform the following steps:

Press and hold the top right corner of the touchscreen to enter Maintenance mode and the following screen will appear:

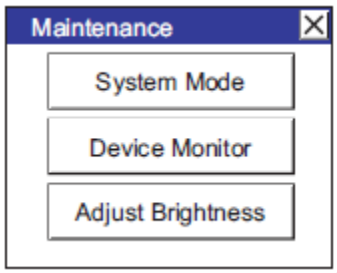

Press system mode to enter the internal setup of the touch screen and the following screen will appear. Press Offline.

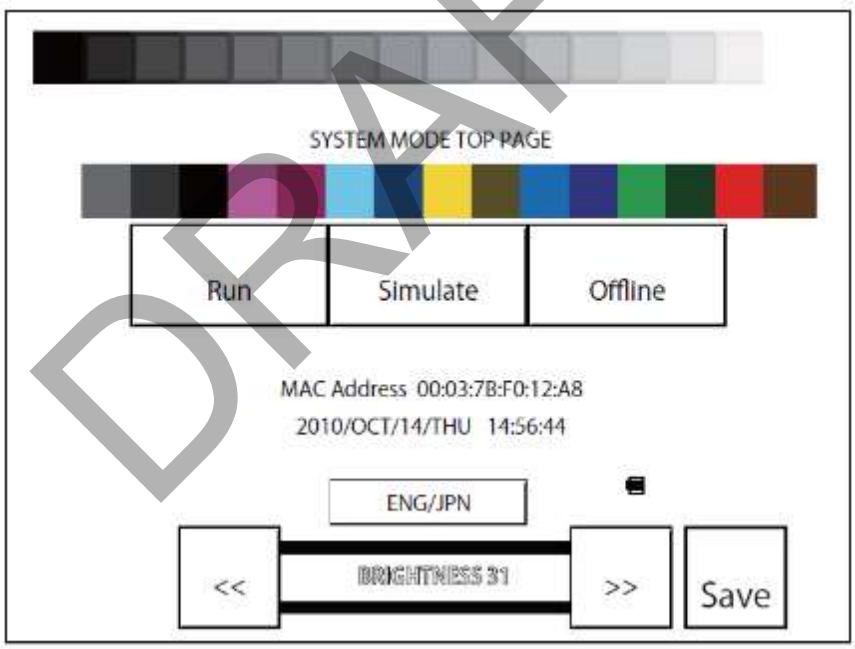

DRAFT

NOTE: Care must be taken when entering the Maintenance Mode of the touch screen. Failure could result if the wrong keys are pressed.

Now press the following menu buttons:

INITIAL SETTING	➔	COMMUNICATION I/F	➔	ETHERNET IP ADDRESS

Use the keypad to enter the desired IP address and subnet mask. Press the enter button to apply the entered values.

Press Exit to return, then at the Main Menu, press the RUN button to start the system and return to the sampler's operation screens.

15.3 Webserver Functions

To access the webserver functions, the sampler must be hooked up to a network and configured for the correct subnet.

Using a standard browser that supports frames (IE 8.0 and higher is recommended or Google chrome) open a new browser window and type the following in the address bar:

http://192.168.1.123/

Where 192.168.1.123 is the touchscreen's IP address, if this address has changed, then you must type the new address in the address bar.

A security window will appear to enter a username and password:

Username: Wilbur
Password: *'blank'*

The user name is 'Wilbur' which is case sensitive so the capital 'W' must be used in the username field.

Leave the password field empty, there is no password.

DRAFT

The following screen will appear:

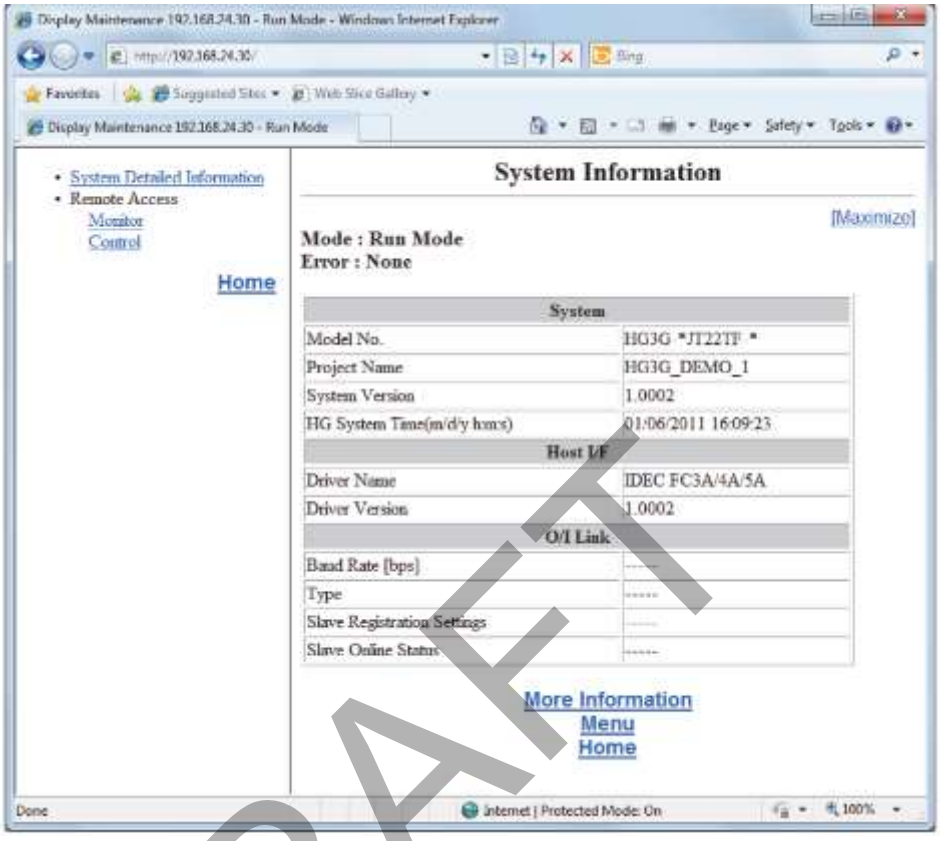

On the left window pane the following options are available:

Monitor — Will show the same screen the touchscreen is showing. Does not allow for remote control, just monitoring only.

Control — Will allow the touchscreen to be controlled from the web browser window.

DRAFT

15.4 Remote Data Upload

The TE-Wilbur sampler allows for remote uploading of the data log and history log using a software tool called Downloader which is produced and supported by IDEC Corporation.

The downloader tool can be found and downloaded at this address:

http://www.idec.com/caen/products/Catalogs/Software/WindOI_NV2/document.html

NOTE: The downloader tool can cause unrecoverable loss of data and can render the system disabled if the wrong functions are performed.

After installation of the downloader tool, click on the icon and launch the program.

Click on Options and select 'Communication Settings…'

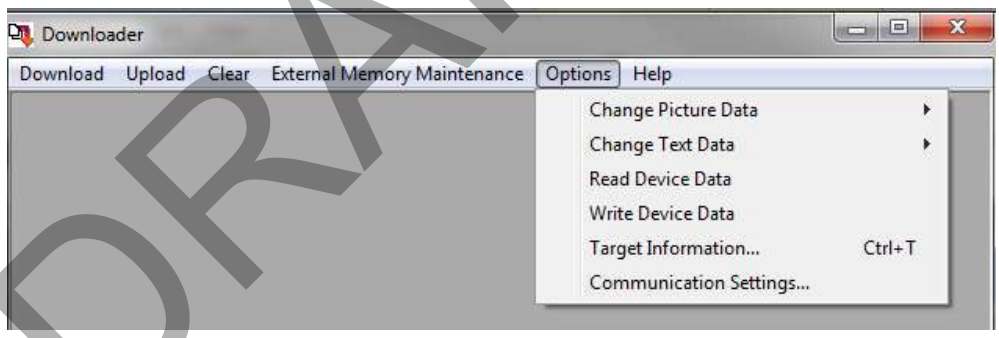

DRAFT

The following window will open. Select to communicate with a MICRO/I and set the port to Ethernet.

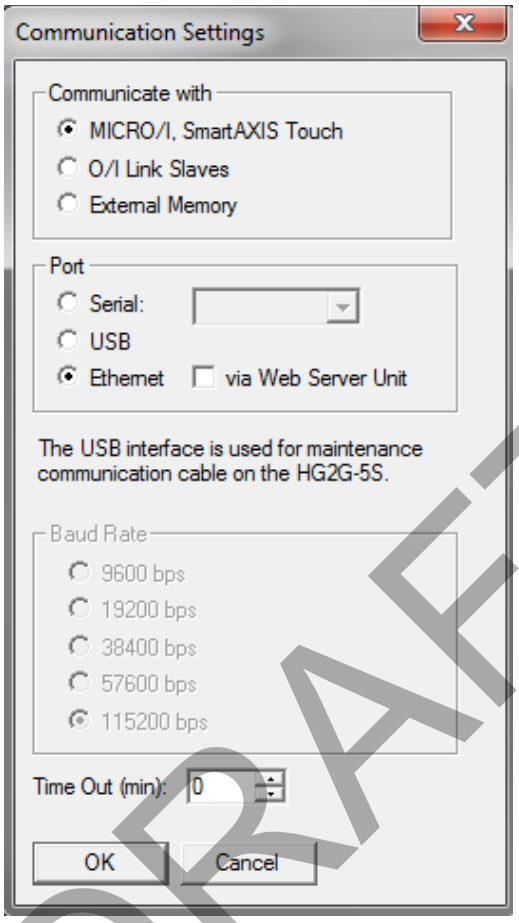

DRAFT

To upload the data log or history log to your PC perform the following:

Click on Upload

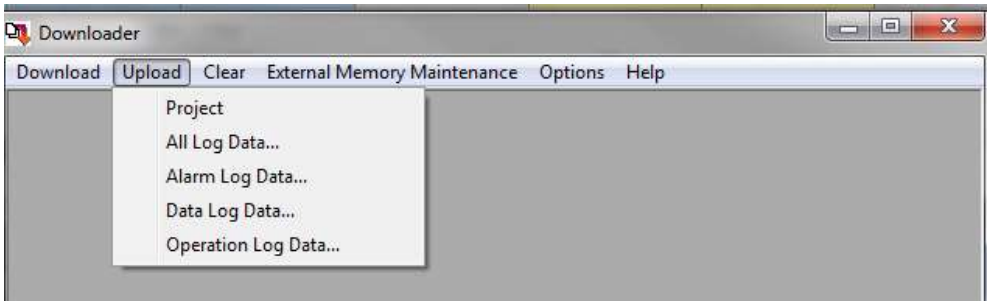

Then click:

All Log Data	To download all logs
Data Log Data	To download the data log or run summary log
Alarm Log Data	To download the history log

The software will then ask for a path to save the data, select a path and click OK to save the file.

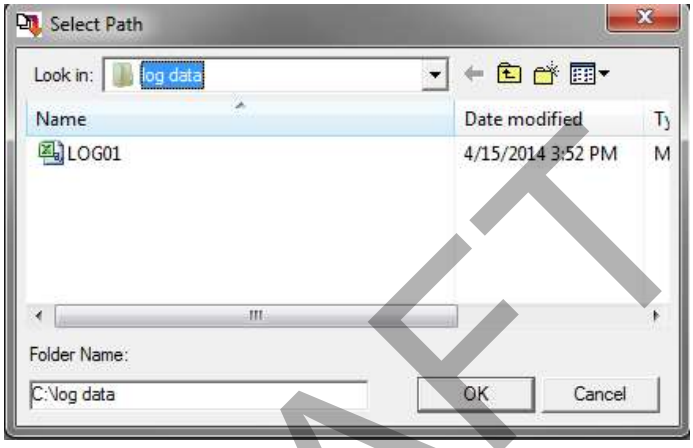

15.5 MODBUS Configuration

The TE-Wilbur MODBUS port is located on the side box and is configured as an RS485 RJ-11 plug. The communication parameters for MODBUS are configured as follows:

Modbus Serial Protocol – RS485 SLAVE

Baud Rate (bps)	9600
Data Bits	8
Parity	Even
Stop Bits	1
Slave Number	1 (default)

DRAFT

The cable needed for connection to the Modbus is a Tisch Environmental part number TE-W-217 and has the following RS-485 pin connections:

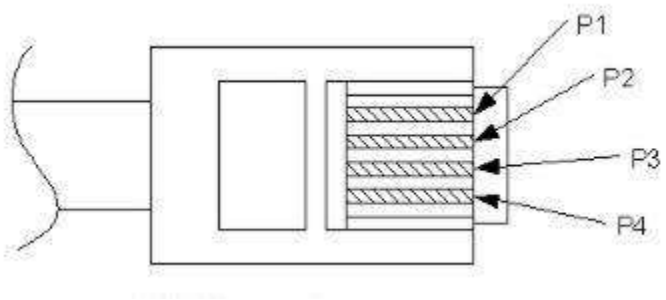

P1	A(+)
P2	Not Used
P3	Not Used
P4	B(-)

The Slave address of the sampler can be set by following these keystrokes:

MAIN MENU ➔ **MAINTENANCE MENU** ➔ **MORE MAINTENANCE MENU** ➔ **CHANGE MODBUS ADDRESS**

Change MODBUS Screen

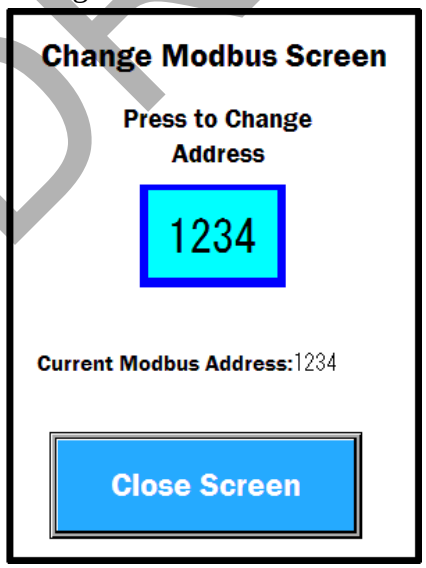

The MODBUS valid addresses are 1 thru 1000

DRAFT

15.6 MODBUS Data Map

The following MODBUS Data registers are used:

MODBUS Address	Comm Frame	Data Type	TE-Wilbur Internal Address	Description
413001	32C8	Float32	D13000	30 second Average Volumetric Flow
413003	32CA	Float32	D13002	30 second Max Volumetric Flow
413005	32CC	Float32	D13004	30 second Min Volumetric Flow
413007	32CE	Float32	D13006	30 second Average Baro Pressure
413009	32D0	Float32	D13008	30 second Max Baro Pressure
413011	32D2	Float32	D13010	30 second Min Baro Pressure
413013	32D4	Float32	D13012	30 second Average Filter Temp
413015	32D6	Float32	D13014	30 second Max Filter Temp
413017	32D8	Float32	D13016	30 second Min Filter Temp
413019	32DA	Float32	D13018	30 second Average Ambient Temperature
413021	32DC	Float32	D13020	30 second Max Ambient Temperature
413023	32DE	Float32	D13022	30 second Min Ambient Temperature
413025	32E0	Float32	D13024	30 second Average System Pressure
413027	32E2	Float32	D13026	30 second Max System Pressure
413029	32E4	Float32	D13028	30 second Min System Pressure
413031	32E6	Float32	D13030	Data Log Average Volumetric Flow
413033	32E8	Float32	D13032	Data Log Max Volumetric Flow
413035	32EA	Float32	D13034	Data Log Min Volumetric Flow
413037	32EC	Float32	D13036	Data Log Average Baro Pressure
413039	32EE	Float32	D13038	Data Log Max Baro Pressure
413041	32F0	Float32	D13040	Data Log Min Baro Pressure
413043	32F2	Float32	D13042	Data Log Average Filter Temp
413045	32F4	Float32	D13044	Data Log Max Filter Temp
413047	32F6	Float32	D13046	Data Log Min Filter Temp
413049	32F8	Float32	D13048	Data Log Average Ambient Temperature
413051	32FA	Float32	D13050	Data Log Max Ambient Temperature
413053	32FC	Float32	D13052	Data Log Min Ambient Temperature
413055	32FE	Float32	D13054	Data Log Average System Pressure
413057	3300	Float32	D13056	Data Log Max System Pressure
413059	3302	Float32	D13058	Data Log Min System Pressure
413061	3304	Float32	D13060	Data Log Average Temp Variance
413063	3306	Float32	D13062	Data Log Max Temp Variance
413065	3308	Float32	D13064	Data Log Min Temp Variance
413067	330A	Float32	D13066	Flow total

DRAFT

MODBUS Address	Comm Frame	Data Type	TE-Wilbur Internal Address	Description
413069	330C	Float32	D13068	Flow CV
413071	330E	Float32	D13070	Sample Time
413073	3310	BIN32	D13072	Filter ID
413075	3312	BIN32	D13074	Site ID
413077	3314	BIN32	D13076	Serial Number
413079	3316	Float32	D13078	Instantaneous Flow Reading
413081	3318	Float32	D13080	Instantaneous Baro Pressure Reading
413083	331A	Float32	D13082	Instantaneous Filter Temp Reading
413085	331C	Float32	D13084	Instantaneous Ambient Temp Reading
413087	331E	Float32	D13086	Instantaneous System Pressure Reading
002604	0A2B	Binary	M2003	10% Flow Variance Alarm
002606	0A2D	Binary	M2005	High Pressure Alarm
002616	0A37	Binary	M2017	5% Flow Variance Alarm
002617	0A37	Binary	M2020	Sample time <23 or >25 hours
002612	0A33	Binary	M2013	Ambient Temperature Failure
002613	0A343	Binary	M2014	Filter Temperature Failure
002609	0A30	Binary	M2010	Flowmeter Failure
002611	0A32	Binary	M2012	Barometric Pressure Failure
002610	0A31	Binary	M2011	Pressure Sensor Failure
002627	0A42	Binary	M2032	Temperature Variance Alarm
002628	0A43	Binary	M2033	Sample Warning Alarm
002630	0A45	Binary	M2035	Battery Discharge Alarm
002631	0A46	Binary	M2036	Battery Failure Alarm
001512	05E7	Binary	M0637	Shut Down Sample Alarm
001529	05F8	Binary	M0660	Screen Battery Failure
001652	0673	Binary	M0813	Power Fail
001772	06EB	Binary	M0963	Mains Power Lost
001497	05D8	Binary	M0620	Custom Sample Set
001501	05DC	Binary	M0624	1 in 3 Sample Set
001502	05DD	Binary	M0625	1 in 6 Sample Set
001503	05DE	Binary	M0626	1 in 12 Sample Set
001500	05DB	Binary	M0623	Sample Running

DRAFT

Appendix A: Parts List

Appendix A is a complete parts listing of the TE-Wilbur sampler, accessories and optional equipment.

A.1 Parts List

The TE-Wilbur can be ordered with (3) configurations for the collection of particulate matter.

TE-Wilbur10	Includes the TE-PM10 10µm collection head.
TE-Wilbur2.5	Includes the TE-PM10 10µm collection head and the TE-PM2.5C $PM_{2.5}$ cyclone fractionator.
TE-WilburTSP	Includes the TE-TSP collection head.
TE-FRM-CAL	Advanced automatic calibrator for the TE-Wilbur air sampling platform

Part Number	Description
TE-PM-10	PM_{10} 10µ collection head
TE-PM2.5C	$PM_{2.5}$ cyclone fractionator
TE-W-STAND	TE-Wilbur stand (complete)
TE-FH	TE-Wilbur Filter Holder (complete)
TE-FH47	Filter cassette top, bottom with screen
TE-W-001	Inlet downtube
TE-W-002	Downtube adapter (black delrin) w/ o-rings
TE-W-003	Silicone gasket for downtube adapter
TE-W-004	Internal leak check disk (solid black disk)
TE-W-005	TE-Wilbur instruction manual
TE-W-050	TE-Wilbur enclosure (complete)
TE-W-051	Left internal side plate with opening
TE-W-052	Left back mounting plate
TE-W-053	Battery case
TE-W-054	Side box connection internal plate

DRAFT

Part Number	Description
TE-W-055	Filter holder mounting plate
TE-W-056	Pump mounting plate
TE-W-057	Left touch screen panel
TE-W-058	Left, bottom plate
TE-W-059L	LED strip 10” long with wires
TE-W-059R	LED strip 8” long with wires
TE-W-060	(4) Rubber feet
TE-W-061	Black Polycarbonate Handle
TE-W-100	Main color touchscreen
TE-W-101	Main controller module
TE-W-102	Analog input card
TE-W-103	Analog input / output card
TE-W-104	Modbus communication module
TE-W-105	Screen to controller communication cable
TE-W-106	32M SD Card for touchscreen
TE-W-107	USB stick for touchscreen
TE-W-150	Thermal mass flowmeter 0-25 Lpm range
TE-W-151	Ambient temperature RTD with radiation shield
TE-W-152	Filter temperature RTD
TE-W-153	Vacuum pressure sensor
TE-W-154	Barometric pressure sensor
TE-W-200	TE-Wilbur 24VDC Battery Pack
TE-W-201	UPS Module
TE-W-202	24VDC 60 watt power supply
TE-W-203	24VDC Enclosure fan
TE-W-204	Fan guard
TE-W-205	Enclosure louvers
TE-W-206	Power button with green LED

DRAFT

Part Number	Description
TE-W-207	USB interconnection cable
TE-W-208	24VDC Main fuse
TE-W-209	Power cord with US end to IEC320 connection
TE-W-210	AC inlet socket
TE-W-211	Ethernet connector for side box
TE-W-212	24VDC Solenoid
TE-W-213	Side box for external connections
TE-W-214	Power fail relay
TE-W-215	3.3V Lithium Ion battery for screen
TE-W-216	Ethernet patch cable
TE-W-217	Modbus connector for side box
TE-W-223	1Amp Mains Pushbutton Circuit Breaker
TE-W-300	Brushless 24VDC pump
TE-W-301	Pump control circuit board
TE-W-302	Cable for pump control board
TE-W-303	Pump rebuild kit
TE-W-304	Pump muffler 1/8” NPT
TE-W-F01	Pump suction fitting – pushfit 3/8 tube
TE-W-F02	Solenoid to pump connection pushfit 3/8 tube
TE-W-F03	Solenoid fitting to flowmeter 1/4 compression
TE-W-F04	Flowmeter fittings 1/4 compression
TE-W-F05	Pressure sensor tee
TE-W-F06	1/4 OD polyurethane tubing
TE-W-F07	3/8 OD PUR tubing

DRAFT

A.2 Filter Holder Parts List

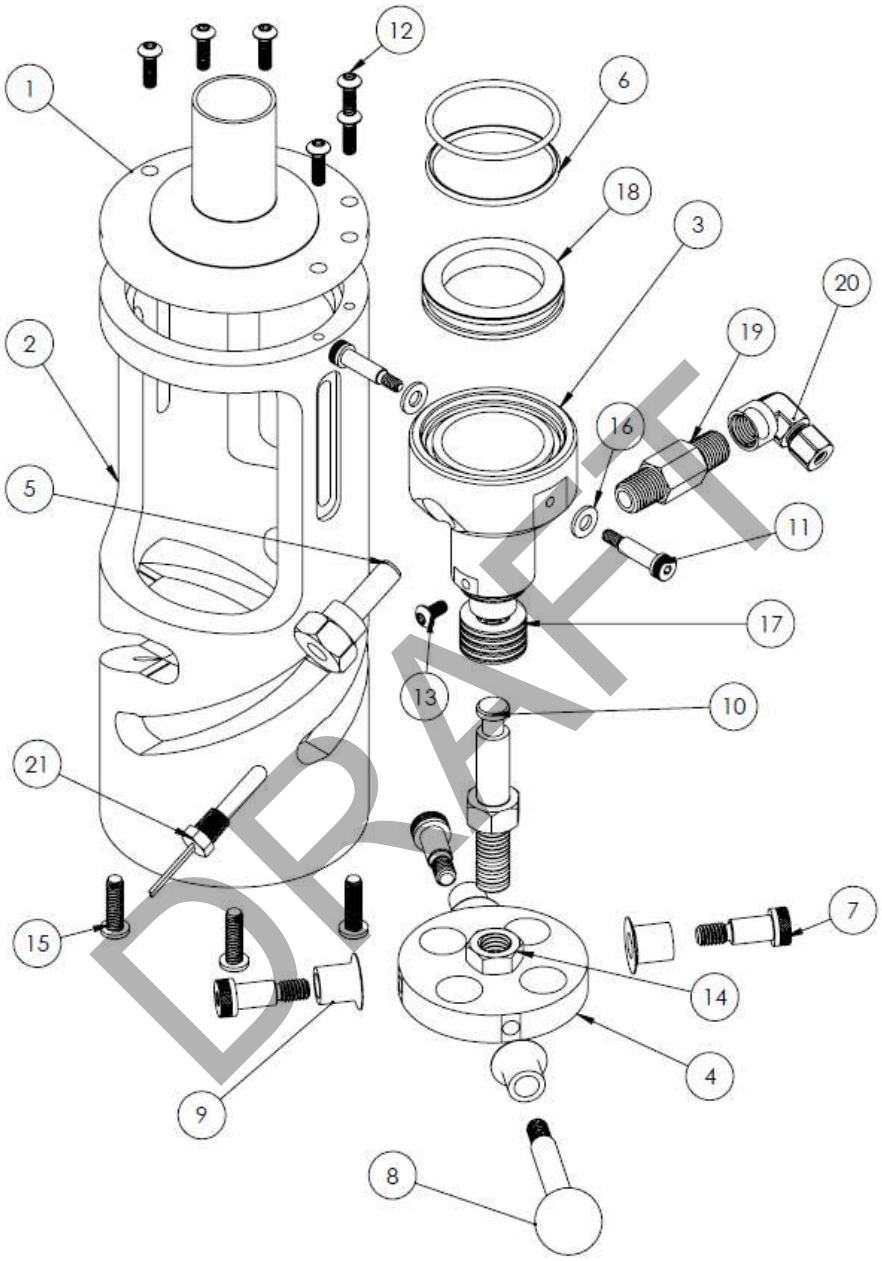

DRAFT

Number	Part Number	Description
1	TE-W-FH1	Top mate
2	TE-W-FH2	Helix Lever Base
3	TE-W-FH3	Bottom mate
4	TE-W-FH4	Cam lever plate
5	TE-W-FH5	Thermowell
6	TE-W-FH6	Bottom and top mate o-rings (Qty 2)
7	TE-W-FH7	5/16-18 shoulder bolt (Qty 3)
8	TE-W-FH8	Lever handle with ball (stainless steel)
9	TE-W-FH9	Cam bushing (Qty 4)
10	TE-W-FH10	Drive rod
11	TE-W-FH11	10-24 shoulder bolt (Qty 2)
12	TE-W-FH12	10-32 socket cap screw (Qty 6)
13	TE-W-FH13	Set screw
14	TE-W-FH14	Drive rod nut
15	TE-W-FH15	1/4-20 mounting bolts (Qty 4)
16	TE-W-FH16	PTFE washer (Qty 2)
17	TE-W-FH17	Belleville washers (Qty 10)
18	TE-FH47	Filter Cassette
19	TE-W-FH19	Filter holder hex nipple
20	TE-W-FH20	Compression fitting elbow
21	TE-W-152	PT100 RTD Filter Holder Temperature Probe

DRAFT

A.3 Optional Accessories

Part Number	Description
TE-W-500	Filter Cassette Separator tool
TE-W-501	Modbus cable – RJ9 2-wire 25’ long
TE-W-502	External 24VDC connection cable 25’ long
TE-W-503	Ethernet cable RJ45 25’ long

A.4 Solar Option Parts List

Part Number	Description
TE-W-600	Solar control system panel complete w/o Batteries
TE-W-601	Solar controller
TE-W-602	250 watt 24VDC Solar panel
TE-W-603	MC cables 10’ long
TE-W-606	Solar Mounting Kit
TE-W-608	External connection cable 25’ long

DRAFT

A.5 O-Ring Replacement Part Numbers

PM_{10} Head replacement o-rings P/N: TE-W-020 for complete kit

Quantity	Description	Part Number
2	Exit Adapter O-Rings	TE-W-022
1	Impactor Nozzle O-Ring	TE-W-023
2	Downtube O-Rings	TE-W-021

TE-PM2.5C replacement o-rings P/N: TE-W-030 for complete kit

Quantity	Description	Part Number
2	Exit Nozzle O-Rings	TE-W-031
1	Collector Cup O-Ring	TE-W-032
1	Threaded Insert O-Ring	TE-W-033
4	Connector tube O-Rings	TE-W-034
2	Stainless bolt O-Rings	TE-W-035

Appendix B: Drawings

Appendix B includes detailed drawings on the TE-Wilbur sampler.

B.1 Electrical Terminal TB1 connections

Terminal Number	Description
1	(+) terminal for LED lighting strips Blue/Green wire
2	(+) terminal for ventilation fan Brown wire
3	(+) terminal for solenoid valve
4	black wire – (+) signal output from flowmeter
5	brown wire – (+) supply voltage to flowmeter
6	blue wire – (-) supply voltage to flowmeter
7	(+) Supply and signal to pressure sensor
8	(-) supply and signal to pressure sensor
9	white wire – (+) signal from barometric pressure sensor
10	black wire – (-) supply to barometric pressure sensor
11	red wire – (+) supply to barometric pressure sensor
12	(+) signal for pump speed control
13	(-) signal for pump speed control
14	ambient temperature connection (no polarity)
15	ambient temperature connection (no polarity)
16	filter temperature connection (no polarity)
17	filter temperature connection (no polarity)
18	(+) connection for battery pack
19	(-) connection for battery pack

DRAFT

B.2 TE-Wilbur Drawings

Illustration of sampler with enclosure shut

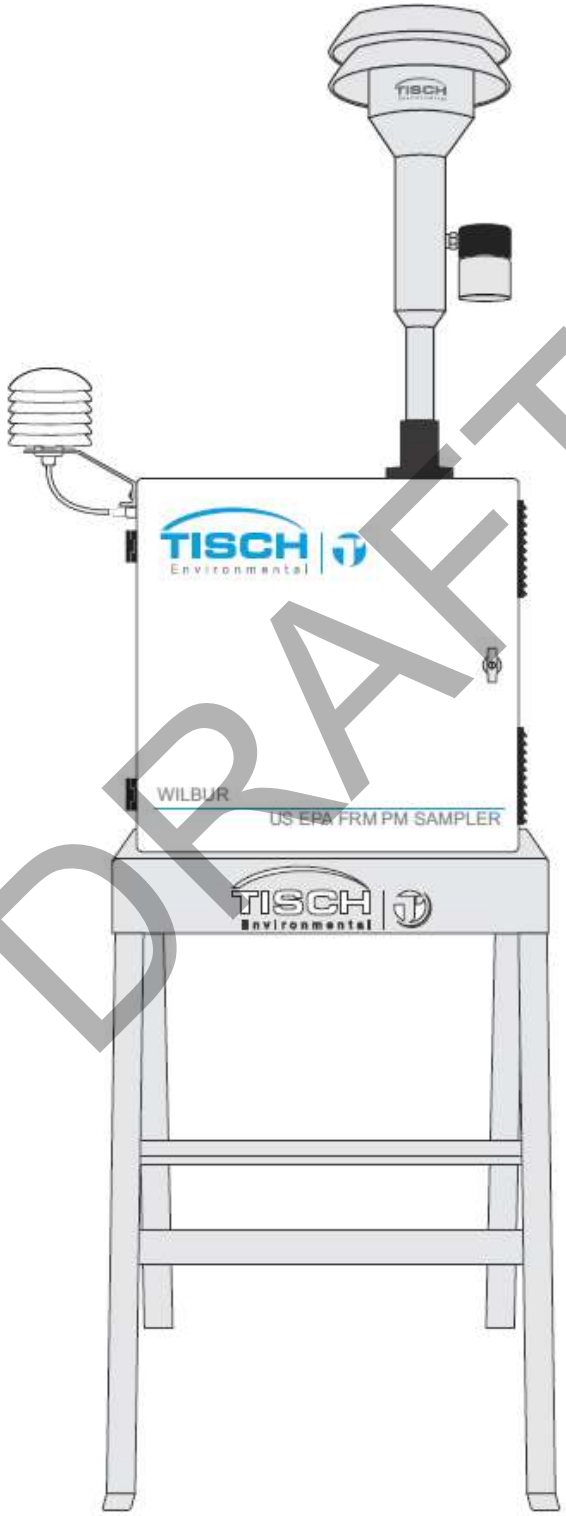

DRAFT

Illustration of sampler setup for PM_{10} collection

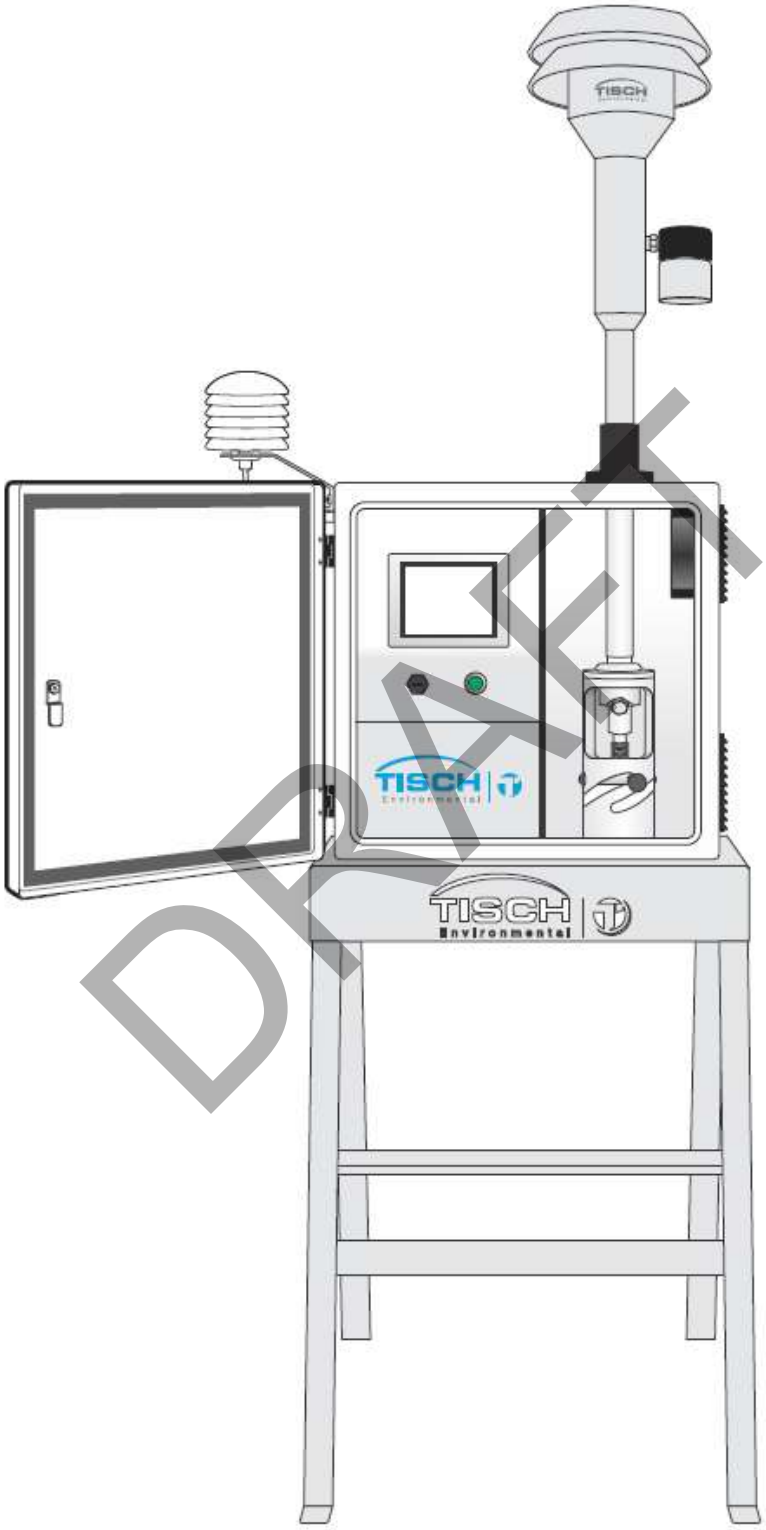

DRAFT

Illustration showing sampler setup for $PM_{2.5}$ collection

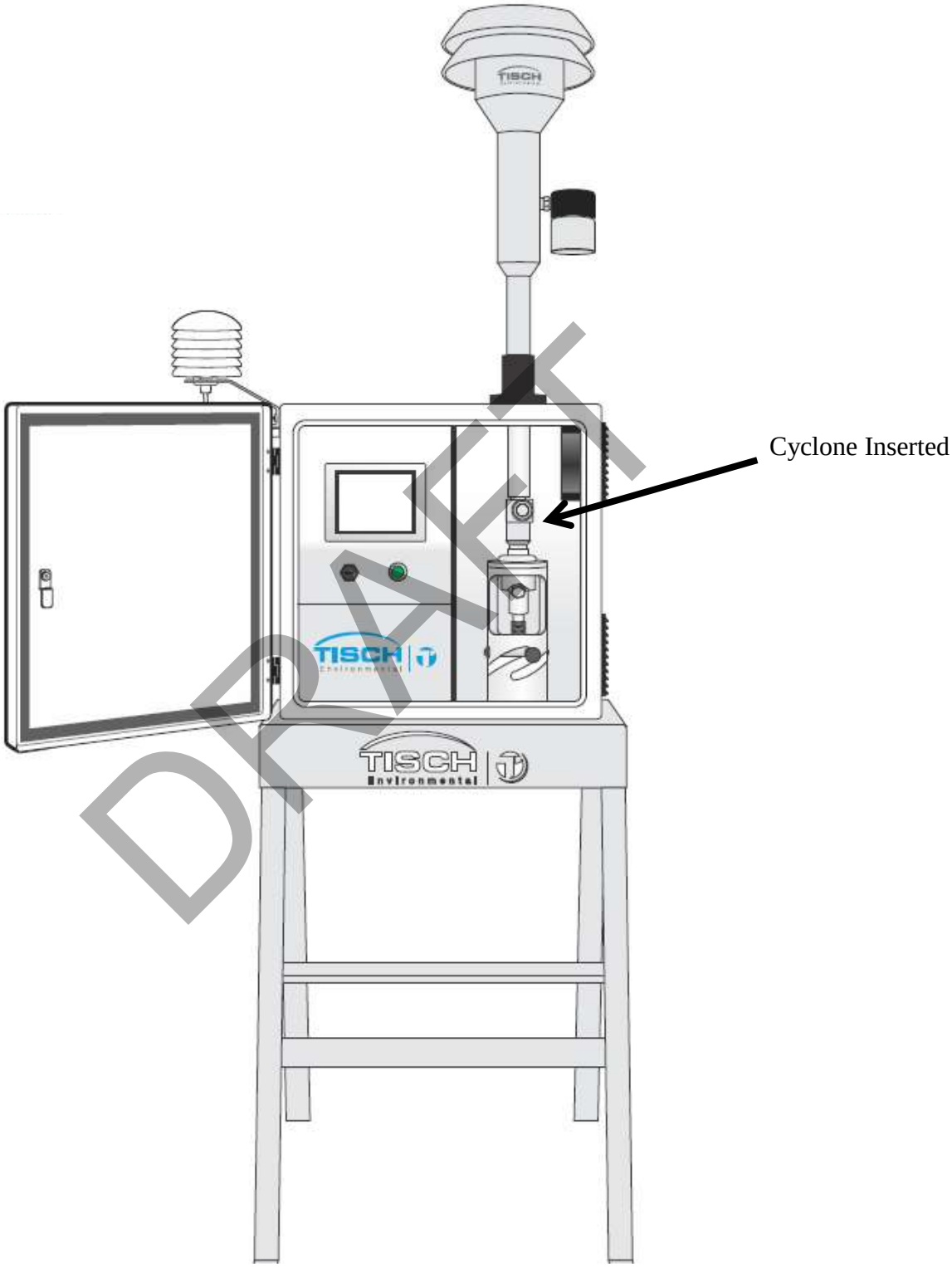

DRAFT

B.3 Enclosure Stand Drawing

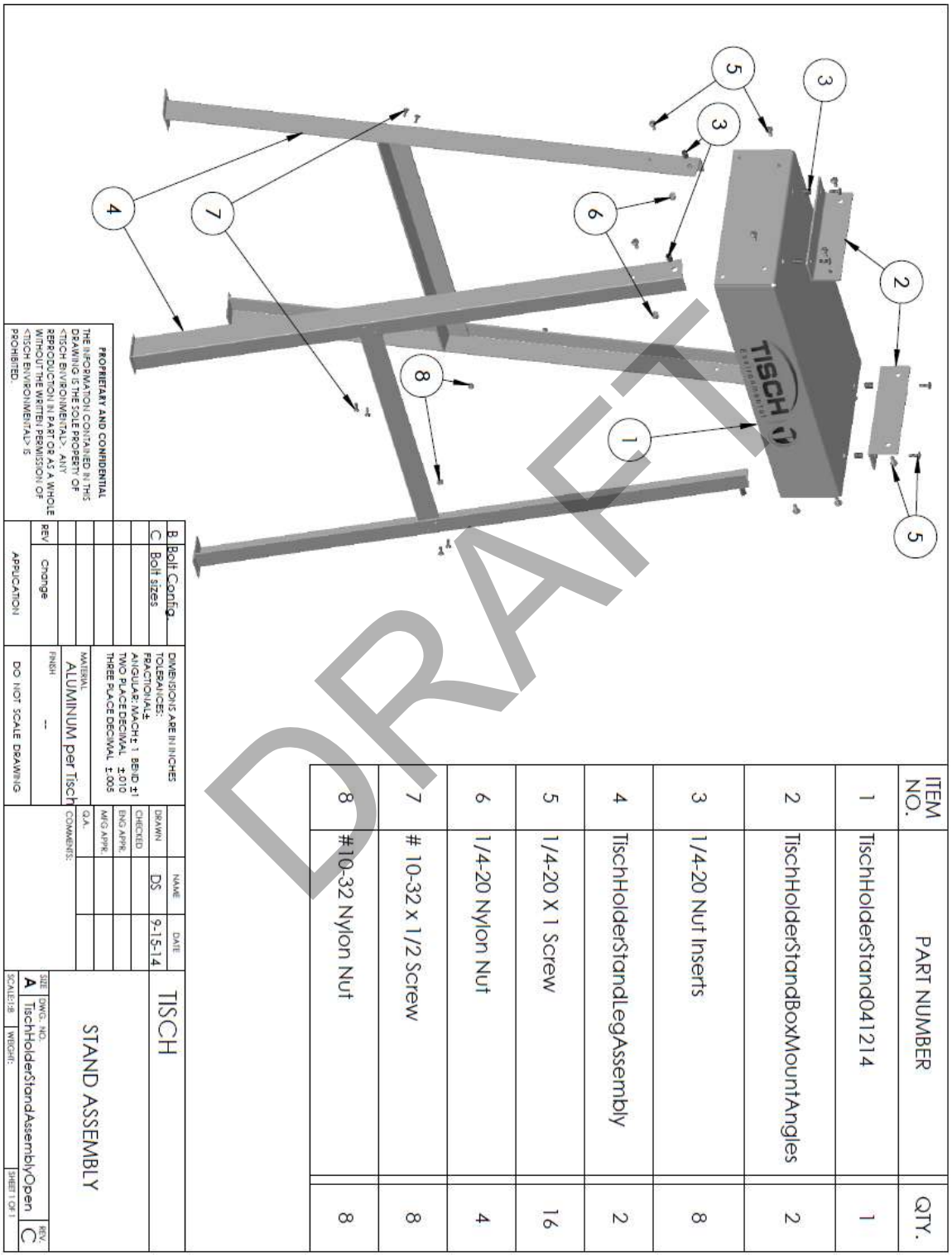

B.4 TE-PM2.5C Drawing

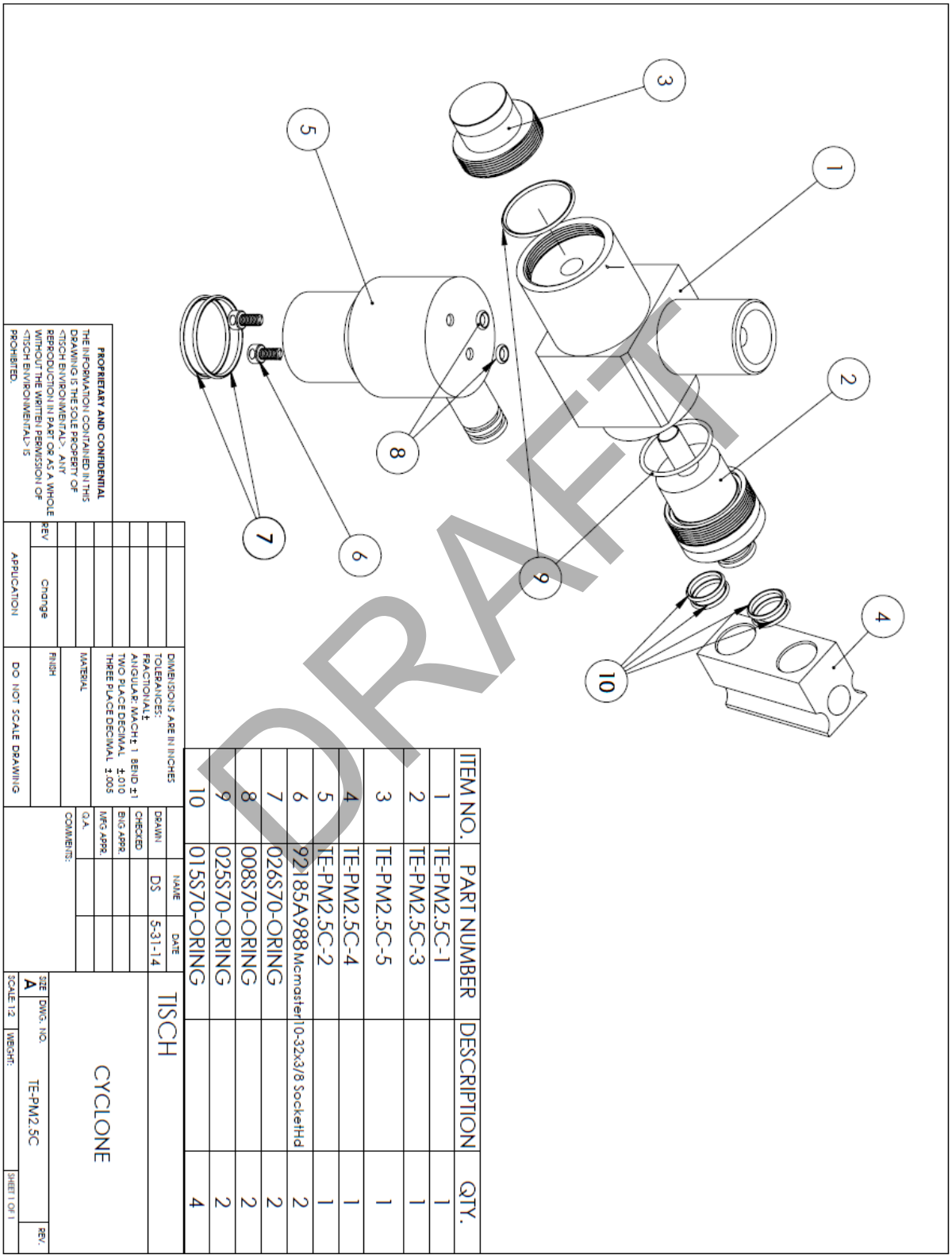

B.5 TE-PM10 Drawings

TE-PM10 Lower Assembly Drawing

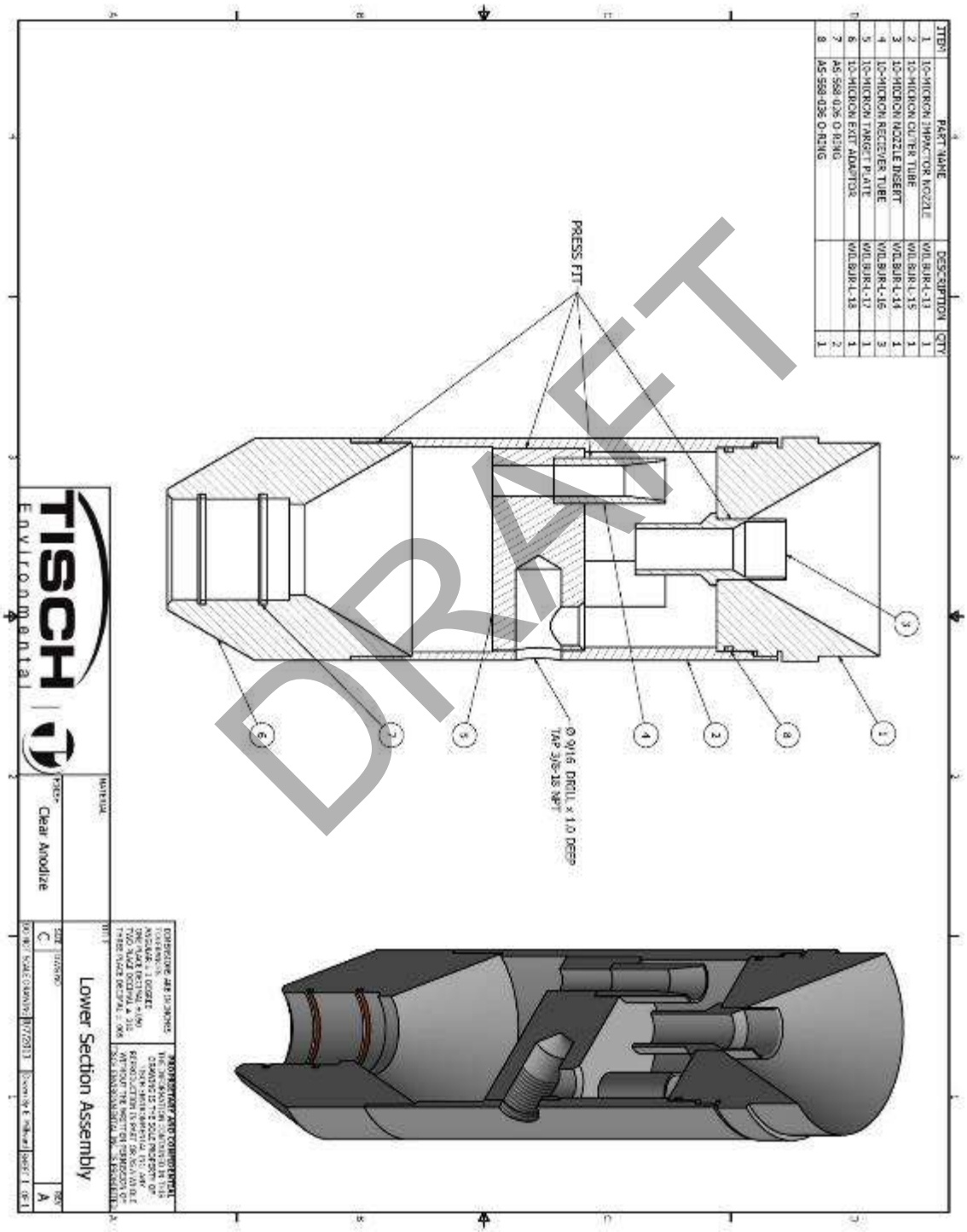

TE-PM10 Upper Assembly Drawing

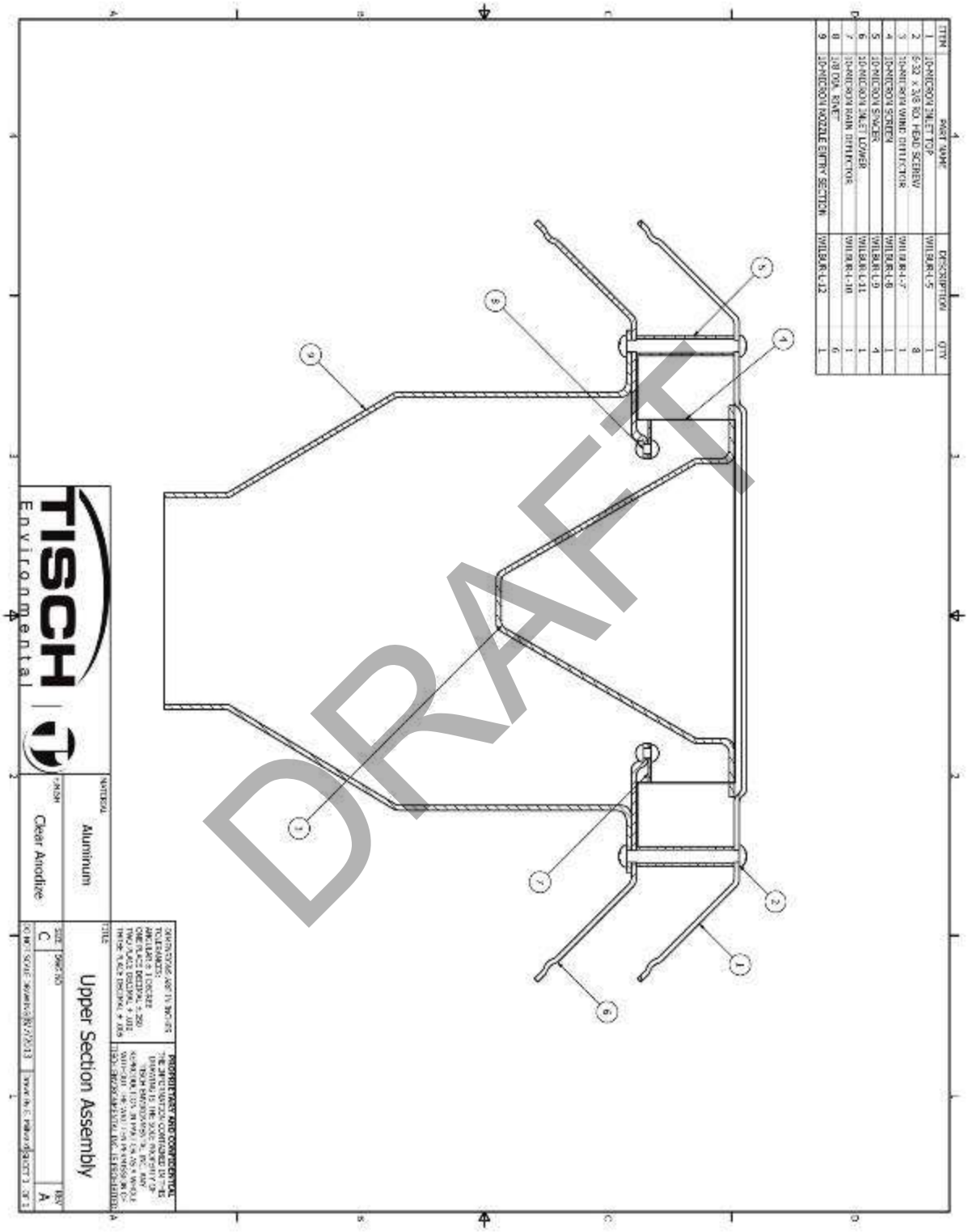

Appendix C: Revision History

Revision No.	Date	Description
REV001	5-3-14	Manual created
REV002	5-5-14	Added quick start guide as Section 3.0
REV002.1	5-24-14	Added TE-Wilbur Calibration Worksheet and worksheet instructions to section 7.0 Calibration – created new section 7.9
REV002.2	6-2-14	Added TE-PM2.5C exploded view drawing
REV002.3	6-18-14	Updated MODBUS addressing, added updated pictures for connection plate and TE-PM2.5C, added TE-PM10 drawings and updated stand drawing, filter cassette drawing and pneumatic diagram
REV002.4	7-10-14	Updated several punctuation comments from USEPA designation and added several alerts
REV002.5	7-26-14	Added instructions 2.8 for changing language
REV002.6	8-23-14	Added USEPA Reference designation number
REV002.7	9-11-14	Added instructions and illustrations for unpacking of the unit Updated dimensions for PM2.5 and PM10 Updated fuse information
REV002.8	9-15-14	Updated USEPA Federal Reference Method designation and Federal Equivalency Method designation
REV002.9	10-3-14	Added louver filter maintenance section 13.20 Updated calibration worksheet with new version
REV002.10	11-1-14 11-4-14	Added warning about use of outdoor-rated cords Added USEPA FRM Designation numbers Updated screen for V1.80 of software. Changed last sample completed to sample summary screen
REV002.11	11-11-14	Added part number for TE-FRM-CAL calibrator
REV002.12	11-27-14	Updated electrical drawings in section 13.0 Added software revision history Appendix D

DRAFT

REV002.13	2-19-15	Updated manual to reflect flow setpoint changes of 90/95/100/105% of setpoint Updated solar panel configuration to include (2) panels
REV002.14	3-7-15	Added section 6.6 and documentation for new sample information screens that will give the user information for the last 5 samples completed
REV002.15	6-11-15	Added USEPA designations for using the TE-PM2.5C $PM_{2.5}$ fractionator
REV002.2	1-07-2016	Added updates to the sample summary log for version 3.5 of the firmware

DRAFT

Appendix D: Software Revision History

Screen Revision History

Date	Version	Comments
9/28/14	1.10	Production version
10/9/14	1.70	Production version – changed version for USEPA FRM designation
10/29/14	1.80	Changed sample completed button and screens to sample summary
11/10/14	1.90	Changed ability for the screen to have its own software version
2/19/15	2.1	Changed the calibration system to be 90/95/100/105% of setpoint to ease calibration and allow setpoints to be closer to the system setpoint of 16.67Lpm. Skipped version 2.0 to allow screen to be the same revision level of the PLC
3/6/15	2.2	Added the ability for the user to view the last 5 sampling events onto the touchscreen
7/20/15	3.0	Added another datalog on the sample summary folder – new datalog is called sample summary and will record every sampling event that takes place.
1/6/15	3.5	Combined time into HHMM and date into MMDDYYYY in the sample summary log Added a sample warning bit in the sample log. If set to a 0, there is no sample warning. If set to 1 there was a sample warning and the history log needs to be examined to determine the warning.

DRAFT

PLC Revision History

Date	Version	Comments
9/28/14	1.10	Production version
10/9/14	1.70	Production version – changed version for USEPA FRM designation
10/29/14	1.80	Changed sample completed button and screens to sample summary
11/18/14	1.90	Multiplied CV by 100 to represent into percent. Changed maximum CV timer to 90 seconds from 60 seconds to allow sample flow to get up to speed more effectively Changed sensor failure alarm timer from 30 seconds to 60 seconds to allow barometric pressure sensor time to boot up when plc firmware is updated
12/11/14	2.0	Changed battery discharge and battery fail alarms so they must stay maintained for 5 seconds before declaring a valid alarm
2/19/15	2.1	Changed the calibration system to be 90/95/100/105% of setpoint to ease calibration and allow setpoints to be closer to the system setpoint of 16.67Lpm.
3/6/15	2.2	Added the ability for the user to view the last 5 sampling events onto the touchscreen
7/20/15	3.0	Added another datalog on the sample summary folder – new datalog is called sample summary and will record every sampling event that takes place.
1/6/15	3.5	Combined time into HHMM and date into MMDDYYYY in the sample summary log Added a sample warning bit in the sample log. If set to a 0, there is no sample warning. If set to 1 there was a sample warning and the history log needs to be examined to determine the warning.

DRAFT

DRAFT

APPENDIX E