METAL SHREDDER RESIDUE TREATABILITY STUDY WORK PLAN

Prepared for

Institute of Scrap Recycling Industries, California Chapter

Prepared by

Terraphase Engineering Inc.
1404 Franklin Street, Suite 600
Oakland, California

July 10, 2014

Project Number 0102.001.001

terraphase engineering

File Ref: wp-msr-ts-0102-001-001

CONTENTS

1.0 INTRODUCTION 1

1.1 Description of Metal Shredder Residue 1

1.2 Regulatory Framework 2

1.3 Purpose of Treatability Study 3

1.4 Unique Characteristics Affecting the Auto Shredder Industry 3

2.0 CURRENT MSR TREATMENT PROCESS 5

2.1 Variables Affecting MSR Treatment 5

2.1.1 Heavy Metal Concentrations 5
2.1.2 Particle Size 6
2.1.3 Chemical Additions 7
2.1.4 Mixing 7
2.1.5 Curing 7
2.1.6 Moisture Content 7

3.0 TREATABILITY STUDY GOALS 8

4.0 STUDY LIMITATIONS 10

5.0 STUDY METHODS 11

5.1 Sample Size Requirements 11

5.2 Collection of MSR for Baseline Characterization and Bench Testing 11

5.2.1 Collection of Composite MSR Material 11
5.2.2 Homogenization of Composite MSR Material 12

5.3 Sample Handling and Documentation 12

5.4 Extraction and Test Methods 13

5.5 Laboratory Analysis 14

6.0 PERFORMANCE CRITERIA 15

7.0 TREATABILITY STUDY METHODOLOGY 16

7.1 Baseline Analysis of Untreated Material 16

7.2 Treatability Testing 16

7.3 Phase 1 Bench-Scale Test: Multiple Reagent Combinations 17

7.3.1 Data Evaluation 18

7.4 Phase 2 Bench-Scale Test: Additional Leachability Testing 19

7.5 Phase 3 Bench-Scale Test: Long-Term Efficacy of Treatment 19

7.6 Pilot-Scale Field Test 20

7.7 Management of Treatment Residuals 20

7.8 Data Validation 20

8.0 REPORTING 22

8.1 Evaluation of Potential Impacts to Groundwater at Landfills 22

8.2 Cost Analysis 22

9.0 SCHEDULE 23

10.0 REFERENCES 24

Tables

1 Historical MSR Treatment Results

2 Extraction Test Procedures

3 Analytical Laboratory Methods, Sample Requirements, and Reporting Limits

Appendices

A *Treatment of Auto Shredder Residue*. Guatney and Trezek. May 18, 2012.

Acronyms and Abbreviations

CERCLA	Comprehensive Environmental Response, Compensation, and Liability Act
COC	constituent of concern
DI	deionized water
DTSC	Department of Toxic Substances Control
EPA	Environmental Protection Agency
L	liter
µg/L	micrograms per liter
Me^{2+}	divalent metal
mg/L	milligrams per liter
mL	milliliter
mM	millimolar
MS	mass spectrometry
MSR	Metal Shredder Residue
MSWL	Municipal Solid Waste Leachate
PCB	polychlorinated biphenyls
RCRA	Resource Conservation and Recovery Act
SM	Standard Method
SPLP	Synthetic Precipitation Leaching Procedure
STLC	Soluble Threshold Limit Concentration
TMSR	Treated Metal Shredder Residue
TCLP	Toxicity Characteristic Leaching Procedure
TTLC	Total Threshold Limit Concentration
SU	standard unit
Terraphase	Terraphase Engineering Inc.
WET	Waste Extraction Test

PAGE LEFT INTENTIONALLY BLANK

1.0 INTRODUCTION

Terraphase Engineering Inc. (Terraphase) has prepared this *Metal Shredder Residue Treatability Study Work Plan* (Work Plan) on behalf of the California Chapter of the Institute of Scrap Recycling Industries (ISRI). The Work Plan presents an approach and laboratory methods for the implementation of a treatability study ("the study"). The overarching purpose of the study is to confirm the effectiveness of previously established methods that are currently used to treat metal shredder residue (MSR) prior to disposal or use of the treated material as alternate daily cover (ADC). The study will evaluate the reduction in leachability and long-term leachability of treated MSR.

The work described in this Work Plan includes:

- Collection of untreated MSR from three scrap metal shredding facilities in California that currently treat MSR
- Baseline characterization of the untreated MSR
- Bench-scale treatability testing using metal stabilization methods
- Leachability testing of treated MSR
- Pilot testing of MSR using the optimal mix of stabilization reagents

This Work Plan was prepared based on a draft work plan previously prepared by ISRI and submitted to the Department of Toxic Substances Control (DTSC) on September 26, 2013. The Work Plan provides additional details regarding the treatability testing methods and addresses comments received from the DTSC in a letter dated March 21, 2014.

1.1 Description of Metal Shredder Residue

MSR is a heterogeneous mixture of largely non-metallic materials resulting from the shredding of auto bodies, appliances, and other scrap metal materials. A metal shredder is a large, electric-powered hammermill that pulverizes metal into fist-sized pieces which are then sorted by different "downstream" metal separation processes including magnets, trommels, screens, optical scanners, eddy currents, and other types of proprietary process equipment. MSR is the material that remains after ferrous and nonferrous metals have been separated and removed from the various streams comprising the output of the shredder. Shredder output is known in the industry as "aggregate" and is an intermediate process material that contains significant amounts of valuable ferrous and nonferrous metal that are separated and sold as commodities. In contrast, MSR consists primarily of foam, fabric, plastics, rubber, tires, glass, wood, and other debris, along with minute amounts of remaining metallic material that is too small to be economically separated and removed from the aggregate. Following completion of processing for metals separation and removal, MSR is sent to an in-line treatment system (described below)

where it is treated prior to transport off-site, primarily for use as ADC. Treated MSR (TMSR) is subject to a final magnetic screen for removal of residual ferrous material before being stockpiled for eventual transport to the landfill.

MSR is classified and managed as a nonhazardous waste under the federal hazardous waste management program (RCRA) and in most jurisdictions. However, California's hazardous waste classification scheme is more stringent than the federal scheme, and considers wastes, unless exempted or excluded from regulation, to be hazardous if they exceed regulatory thresholds known as Total Threshold Limit Concentrations (TTLCs) or Soluble Threshold Limit Concentrations (STLCs). These limits are established for 17 metals, several of which are commonly found in MSR. The extractable concentration of a metal is determined through application of the Waste Extraction Test (WET). The WET procedure uses a citrate extraction solution, which is more aggressive than the acetate solution that is used in the federal Toxicity Characteristic Leaching Procedure (TCLP). The California classification scheme also regulates metals that are not regulated under RCRA, including copper, nickel and zinc. Testing of MSR has shown that it typically contains certain inorganic elements in excess of TTLCs, and certain extractable metals in excess of the STLCs, as determined by the WET. Other state toxicity characteristics (e.g., aquatic toxicity) are not exhibited by treated or untreated MSR.

1.2 Regulatory Framework

Following adoption of the state hazardous waste management program in the early 1980s, the companies that generated MSR developed a means of treating shredder residue through a chemical fixation process that greatly reduces the solubility of residual metals in the waste, such that the treated material has very limited leachability under typical solid waste landfill scenarios. A detailed description of the treatment process can be found in *Treatment of Auto Shredder Residue*, a report, dated May 2012, by Mark J. Guatney of EnviroSure Solutions and Dr. George J. Trezek, Ph.D., a U.C. Berkeley Emeritus Professor of Chemical Engineering who developed the treatment process (referred to hereafter as "the Trezek Report"). A copy of the Trezek Report is provided in Attachment 1. Although the treatment process has been optimized over time, the basic chemistry remains the same. A brief summary of the current treatment process is presented in Section 2.0 below.

Following development of the treatment process, the shredder companies applied to the Department of Health Services (the predecessor to DTSC) to classify treated MSR as a nonhazardous waste on the grounds that the waste possessed mitigating physical and chemical characteristics that rendered it insignificant as a hazard to human health and the environment [see former section 66305(e), Title 22, California Code of Regulations, recodified as section 66260.200(f)]. Each application was supported by analytical data that compared the solubility of key heavy metals (primarily lead and cadmium) in the waste before and after treatment, and reclassification was granted by the DTSC based on the demonstrated effectiveness of the treatment process in reducing the solubility of the waste. While most companies were originally

required to remove mufflers and tailpipes from automobile bodies prior to shredding in order to qualify for reclassification, this condition was later eliminated when it was demonstrated that the treatment process effectively reduced the solubility of metals associated with these automobile parts. A treatment standard of 50 milligrams per liter (mg/L) for lead was established as sufficient for declassification of TMSR, given the common occurrence of lead in roadside dirt at an extractable concentration greater than the STLC (5 mg/L) and the fact that under the conditions found in most solid waste landfills, the solubility of lead would be less than 5 mg/L, as demonstrated by modified WET testing using landfill leachate or deionized water. Subsequent analysis of TMSR using landfill leachate has shown the extractable lead level to be less than 0.5 mg/L, which is less than one-tenth of the STLC.

Declassification letters were issued to the individual shredder companies during the late 1980s - early 1990s time frame and remain in effect today.[1]

1.3 Purpose of Treatability Study

Although MSR has been treated successfully for many years, this process has proceeded without significant regulatory oversight due to the nonhazardous classification of the material. DTSC has requested this treatability study as a means of validating the assumptions and conclusions set forth in the Trezek Report and to substantiate the continued classification of TMSR as a nonhazardous waste. The study is designed to fine-tune the MSR treatment technology by identifying an optimal treatment mix that is protective of human health and the environment but does not result in unnecessary overtreatment or excessive material bulking.

The results of this study are expected to provide a scientific basis for the establishment of uniform statewide treatment standards that are protective of human health and the environment and that will allow the industry to manage TMSR in a beneficial, cost-effective manner, taking into consideration the extremely large volume of material that is generated, the economic realities of the industry, and other factors. The study will also be useful in responding to questions raised by the public regarding the treatment process. This treatability study work plan was prepared in accordance with guidance provided by DTSC.

1.4 Unique Characteristics Affecting the Auto Shredder Industry

MSR is a very high-volume, low-hazard waste that is not susceptible to waste minimization beyond the shredders' efforts to remove ferrous metals, nonferrous metals, and other recyclables for which there are existing markets. Industry-wide efforts are underway to increase the removal and marketability of other components of MSR, but these efforts are long-term, dependent on global economic conditions and the ability to overcome regulatory and market hurdles. Simply put, if the cost of treating, transporting and disposing of MSR, per volume of

[1] These letters are sometimes called "f" letters, based on the subsection of current section 66260.200 that authorizes DTSC to reclassify hazardous waste as nonhazardous. The specific terms of the declassification letters issued to different auto shredders differ somewhat.

scrap, exceeds the profit derived from the sale of metals and other recyclables from that volume of scrap, the shredder operation ceases to be economically viable. Shredder facilities do not add any hazardous substances to the materials they process, and the companies participating in this study each implement rigorous scrap acceptance policies to ensure that hazardous materials are not inadvertently accepted into the yard. Domestic shredder facilities provide an important public service by separating and recycling valuable resources from the vast sea of metallic discards produced by society, thereby conserving energy, avoiding the need to mine virgin ores, reducing greenhouse gases, conserving limited landfill capacity, and helping to reduce or eliminate urban blight. The societal and environmental benefits that flow from the shredding industry are significant and justify the need for regulatory requirements that are commensurate with the low risk associated with MSR. Despite decades of disposal or placement of treated and untreated MSR in California landfills (lined and unlined), there are no known cases of environmental damage or threats to human health resulting from management of MSR.

Economic studies conducted by independent third parties demonstrate that cost-effective options for management of MSR are important to the survival of the shredder industry in California. Increasingly, the domestic industry is threatened by competition from foreign companies that pay increased prices for end-of-life vehicles and appliances in California and neighboring markets and ship them overseas with minimal or no prior processing. Without the attendant regulatory costs associated with treating, transporting and disposing of MSR, these companies threaten the existence of domestic shredders. It is thus essential that regulations applicable to the management of MSR reflect an appropriate level of treatment, taking into consideration the inherent characteristics of the material, how the treated material is used, and the very low potential for human or environmental exposure.

2.0 CURRENT MSR TREATMENT PROCESS

The treatment process that has been in use since the late 1980s is chemical in nature and involves the application of liquid silicates to the final residue. In regulatory terms, this treatment process can best be described as in-line chemical fixation or stabilization.[2] The process is completed with the addition of an alkaline activator, such as cement or lime. Previous reports and publications, including the Trezek Report, which have been submitted to DTSC, provide detailed descriptions and discussions of the process, including the governing chemical reaction equations.

The treatment is applied after the aggregate has been processed through the downstream nonferrous metal removal system. The initial step in the treatment process is the thorough wetting of the residue by the liquid silicate blend as it enters the pug mill mixer. After the wetted material is thoroughly mixed, the alkaline activator is added and the mixing continues in the remainder of the pug mill screw. Treated material is passed under a metal separator (magnet) for further metal recovery and then discharged and conveyed into a stockpile where it is accumulated until shipped off-site for use as alternative daily cover (ADC). Because of the usefulness of TMSR as ADC, the material is rarely disposed of as a waste.

2.1 Variables Affecting MSR Treatment

The following is a discussion of the principal variables influencing the MSR treatment process.

2.1.1 Heavy Metal Concentrations

The concentration of heavy metals in MSR is the controlling parameter in establishing the treatment protocol as well as the amount of reduction required to meet given treatment standards. All shredders process a wide variety of scrap metal, the mix of which varies daily at every facility. Over time, untreated shredder residue generated by one facility is largely indistinguishable from residue generated by another, both in terms of its physical appearance, composition and chemical constituents. Recent data indicate that the ranges of WET-extractable concentrations for the target metals in untreated MSR are as follows:

- Cadmium: 0.26 to 1.5 mg/L
- Lead: 15 to 75 mg/L
- Zinc: 1,550 to 2,000 mg/L

[2] According to the EPA, “stabilization” encompasses treatment processes that are designed to accomplish one or more of the following: (i) improve the handling and physical characteristics of the waste (e.g., sorption of free liquids); (ii) decrease the surface area of the waste mass across which transfer or loss of contaminants can occur; or (iii) limit the solubility of any hazardous constituents of the waste, e.g., by pH adjustment or sorption phenomena (U.S. EPA 1989). Waste stabilization processes include any physical or chemical process used to reduce the mobility of hazardous constituents in a waste, including mixing the waste with binders or other materials, and allowing the resulting mixture to cure. See 22 CCR § 66260.10.

The inherent variability in the extractable concentrations of these metals in MSR is a function of the mix of scrap being shredded and the efficiency of the metal separation and removal processes employed by the shredders. Although the levels of cadmium and lead have decreased as the composition of car bodies and automotive fuels have changed over time, the levels of zinc in the residue suggest that the amount of this metal being used in the manufacture of commonplace products (e.g., galvanized materials, tires and automotive paints) has increased over time.

2.1.2 Particle Size

After removal of most ferrous metal by magnetic separation, the aggregate enters the downstream nonferrous removal system, after passing through a screening device. Materials that do not pass a 4-inch screen ("plus 4") are removed and returned to the shredder, and the balance of the material ("minus 4") is conveyed into the downstream system for removal of nonferrous metals. The size distribution of the material that enters the treatment system after removal of nonferrous metals follows a Rosen-Rammler distribution where 80% passes a 2-inch [50 millimeter (mm)] screen. The 50% passing occurs at approximately 0.75 inches (19 mm), independent of moisture content.

When the declassification letters were issued in the late 1980s and early 1990s, it was generally accepted that most of the residual soluble metals in the MSR resided in the small particles or "fines." Based on prior experience within the industry, the fines were generally described as particles in the size range below 0.45 inches (12 mm). Thus, the MSR was separated into two streams — referred to as "fines" and "oversize"— with treatment focusing on the fines. Following treatment, the fines were recombined with the untreated oversize, usually in a 1:1 ratio, and the combined material was sent off-site for disposal or use as ADC. However, no uniform guidelines were established regarding screen size, and different screening practices were followed by the various shredders, influenced in part by the terms and conditions of their specific declassification letters. Over the years, a general consensus has developed within the industry that the treatment process can be applied to all "minus 4" material (i.e., material passing through a 4-inch screen), thus ensuring treatment of the residual fines contained in what was historically viewed as "oversize" and leading to more uniformity in treatment practices statewide. Material that does not pass through the 4-inch screen is returned to the shredder.

Unless significant new information is learned as a result of the treatability study, the industry is likely to continue the current practice of treating all MSR that passes through a 4-inch screen. If the nonferrous metal separation process utilized at a particular facility results in the production of more than one MSR stream, each consisting of different size fractions within the larger "minus 4" category, and such streams are treated separately, the range of particle sizes in each stream will be evaluated as a variable in the treatment study.

2.1.3 Chemical Additions

As previously stated, MSR is treated using a chemical process that fixes the soluble metals remaining in the material. Two reagents are involved: a liquid silicate blend and an alkaline activator. The amount of each addition is predicated on the targeted level of treatment and the concentrations of metals in the residue, which vary over a somewhat predictable range. The treatment is adjusted for values near the high end of the range. A silicate addition of 0.5 gallons per ton (gal/ton) with 5% cement is a nominal treatment for lead. However, experience has demonstrated that in order to reduce WET-extractable zinc concentrations from 1,650 mg/L to 250 mg/L, the percentage of cement used in the process must be increased to between 10% and 12%, approximately doubling the cost of treatment.

2.1.4 Mixing

A pug mill screw type blender is used for mixing. The wetted residue is mixed in the first 40% of the screw followed by the addition of the alkaline activator. The mixing process is completed in the remainder of the screw. The treated material is discharged onto a holding pile where it is further mixed by a front-end loader as it is being staged for removal from the facility.

2.1.5 Curing

The penetration of the silicates into the treated MSR continues throughout the curing process, which can last for several days, as the material resides in the stockpile or is transported to the landfill. However, samples for analysis are collected at the end of the mixing screw discharge conveyor prior to shipping offsite. Samples are typically collected within hours of treatment, whereas the curing process will continue during accumulation at the facility, transport to the landfill and in the landfill. Therefore, the sampling approach is conservative in that the WET-leachable metals results are likely higher than if the samples were collected a few days to a few weeks after treatment.

2.1.6 Moisture Content

The initial moisture content of the residue, typically on the order of 17% to 23%, is a function of the amount of water added during the shredding process. Moisture can be lost as the aggregate courses through the downstream system, but the initial step in the treatment begins with the re-wetting of the material. After treatment, the moisture content of TMSR is about 20%.

3.0 TREATABILITY STUDY GOALS

The treatability study, and all conclusions regarding the effectiveness of the treatment process, will be based on analytical data from samples collected and analyzed during the course of the study. No historical data will be used to demonstrate the effectiveness of the treatment process, although new data produced by the study may be compared to existing data on treated ASR for comparison purposes and to gain a more comprehensive understanding of the capabilities of the treatment process.

The goals of the treatability study are as follows:

- **Establish the baseline characteristics of untreated MSR, including total and extractable concentrations of Title 22 metals for MSR from each of the three shredder facilities participating in the study.** Samples will be extracted using the WET. RCRA-regulated metals will also be analyzed using the TCLP. Metals that are not present in concentrations exceeding TCLP, TTLC or STLC values will be excluded from the remainder of the study. Based on the industry's experience with the treatment process, lead, zinc and cadmium are expected to be the primary metals studied. As a further validation step, selected samples of treated MSR determined through the study to represent the optimal level of treatment at a given facility will be analyzed for all Title 22 metals, including total and extractable concentrations.

- **Evaluate several treatment mixes in bench test and select optimal treatment formula to be used in pilot-scale test**. Samples of MSR from each of the three shredder facilities will be treated using several combinations of silicate and cement at a treatability laboratory. The treated samples will be analyzed for leachable metals using the WET procedure. The results will be screened against the STLC for each metal tested. The optimal combination of reagents will be selected for application during pilot-scale tests at each of the three shredder facilities.

- **Evaluate whether TMSR exhibits any state toxicity characteristic other than exceedance of TTLCs or STLCs for metals**. Specifically, evaluate (i) the presence of organic persistent and bioaccumulative toxic substances [e.g., polychlorinated biphenyls (PCBs)], and (ii) aquatic toxicity. The purpose of this evaluation is to confirm that TMSR does not contain other hazardous constituents that would render the waste hazardous for reasons other than metals.

- **Determine whether total concentrations of metals are affected by the treatment process**. Based on prior experience, total metals are not expected to be affected by the treatment process as there is no chemical or physical mechanism that removes metals from the MSR during the treatment process.

- **Evaluate the relative cost-effectiveness of different treatment formulas that could be used to achieve alternate levels of reduction in solubility**. Information pertaining to the cost of treatment (e.g., raw material costs, energy costs, sampling and analysis costs, technical support, administrative costs, etc.) will be evaluated. Some of this information is confidential business information and will be handled accordingly.

- **Conduct pilot-scale tests using a selected treatment formula to confirm effectiveness at field scale**. The optimal combination of reagents will be selected for application during pilot-scale tests at each of the three shredder facilities to demonstrate their continued effectiveness when large volumes of MSR are treated. When scaling tests up or down, care will be taken to ensure that consistent ratios of treatment chemicals (concentrations and/or amount) to waste are maintained. Any changes in treatment reagent ratios will be noted and justified.

- **Demonstrate that the treatment process will have long-term effectiveness in a landfill environment**. Treated MSR samples will be leached using several leaching tests, including the multiple extraction procedure, to evaluate potential for long-term leachability.

In addition, the goals set forth above will be demonstrated for each facility seeking continued classification of MSR as a nonhazardous waste. Treatability data from different facilities will not be pooled for classification purposes. Analytical data that are considered to be suspect or unreliable, or that are excluded from evaluation for data quality reasons, will be flagged and the reason for exclusion explained.

4.0 STUDY LIMITATIONS

- The study is limited to three shredder facilities in California. However, one of these facilities is owned and operated by a company that owns and operates two other shredder facilities in California, all of which utilize the same treatment process. Accordingly, the results obtained for the facility that is participating in the study will be applicable to the two other facilities. A single report will be prepared, with separate discussions of results related to MSR from each shredder facility. Where appropriate, data from each facility will be pooled for statistical analysis and industry-wide conclusions will be drawn.

- The study is limited to an evaluation of MSR, the residual material that remains after completion of all ferrous and nonferrous metal separation and removal operations are completed. No aggregate samples will be included in the study.

- The study is limited to an evaluation of the effect of treatment on the solubility of metals that exceed STLC thresholds in the untreated waste. The treatment process is not intended to treat other constituents (e.g., PCBs) that may be contained in MSR.

- The treatment process does not materially affect total concentrations of metals in the waste, and it is anticipated that total concentrations of lead, zinc and copper will routinely be observed in both untreated and treated samples analyzed during the study.

- It is accepted practice to manage oversized MSR (“plus 4”) by returning it to shredders for further reduction. “Plus 4” material that is returned to the shredder will not be included in this study. It is possible, however, that random pieces of material exceeding 4 inches will not be screened out (e.g., odd-shaped pieces of material that exceed 4 inches in only one dimension) and will enter the treatment system, along with smaller material. This oversize material will be treated in the same manner as other MSR, unless it is composed of elemental metal, e.g., screws, bolts, nuts, springs, etc.

5.0 STUDY METHODS

5.1 Sample Size Requirements

Considerable data exist on the current treatment technology. Table 1 shows the results for prior treatability tests using similar silicate and cement additions as proposed in this work plan. The existing data were used to help inform initial sample size requirements. The historical treatment data were used to estimate the minimum number of samples needed to evaluate the effectiveness of treatment with a 90% upper confidence level (UCL). The *DQO Based Sample Sizes* module of ProUCL, US EPA's statistical package, was used to estimate minimum sample size requirements. The standard deviation (SD) for the WET-leachable lead in treated MSR in historical data presented in Table 1 ranged from 0.70 to 0.99 mg/L. Using a conservative SD of 1 mg/L, and an allowable error margin of 1 mg/L, ProUCL calculated the minimum number of samples required to estimate a mean at a 90% UCL is 5.

Data collected during the Phase I bench-scale test will be evaluated to ensure that a sufficient number of replicates are collected during subsequent phases of work. The number of replicates may be adjusted for Phase II and Phase III, depending on the relative differences among the treatment mixes, relative differences between results of treated MSR and comparison criteria, and the statistical distribution of the data.

A Quality Assurance/Quality Control Plan (QAPP) will be developed for the project. The QAPP will include an approach to evaluate data sufficiency.

5.2 Collection of MSR for Baseline Characterization and Bench Testing

The total mass of each MSR composite sample required for baseline characterization and the treatability study is estimated to be 40 kg. In addition, the DTSC has requested that splits of each sample be provided. Therefore, a total of approximately 80 kg of MSR composite sample needs to be collected from each shredder facility. In order to allow for observation of sample collection activities, DTSC staff will be notified of planned sampling at least two working days in advance.

5.2.1 Collection of Composite MSR Material

A consistent procedure will be used at each of the three shredder facilities to collect representative MSR material, from which samples will be subsequently collected for establishing baseline conditions and for use in the treatability study. The sampling point for untreated residue is the location prior to the point where the MSR enters the treatment system.

The procedure for collecting each discrete sample is as follows:

- A clean, long-handled shovel will be placed under the discharge stream, allowing it to be completely filled with MSR. This will result in the collection of approximately a 1.25-kilogram (kg) aliquot of MSR. (The weight will be checked with a portable scale). As each aliquot is

collected, it will be placed in a lined and covered 55-gallon drum or other suitably sized container.

- The shovel will immediately be placed under the discharge stream for a second time, in order to collect an additional 1.25-kg aliquot of MSR. This material will comprise a split sample to be stored separately and provided to the DTSC, if requested.

This procedure will be repeated at half-hour intervals over two eight-hour operating shifts, yielding a total of 64 aliquots, or a total of approximately 80 kg of untreated MSR. This sampling and compositing procedure will be carried out at each of the three shredder facilities.

5.2.2 Homogenization of Composite MSR Material

In order to ensure the representativeness of the samples, the composite MSR material will be homogenized by placing the entire contents of the 55-gallon drum(s) onto a clean, thick plastic sheet where they will be thoroughly mixed using a clean shovel. Consistent with DTSC guidance[3], objects made of elemental metal (e.g., nuts, bolts, coins, nails, etc.) will be manually removed during the mixing. A set of sieves may be used to sort the sample and remove such metal objects from the sample. Metal objects that are removed will be described and photo-documented.

Following the homogenization procedure, the homogenized material will be divided into subsamples as follows:

- The material will be spread into a thin layer on a clean plastic sheet divided into six equal squares or sections. Material from each section will form subsamples totaling approximately 6.5 kg. Four of the sections will be designated as samples Composite-A, Composite-B, Composite-C, and Composite-D.

- The remaining two sections will be thoroughly mixed together and subsequently divided again into two equal sections in order to form a primary sample and a duplicate sample, designated as Composite-E and Composite-E-D, respectively.

- Finally, each of the six composite samples will be divided into two equal sections to produce split samples of each composite sample. Split samples will be stored separately and provided to the DTSC, if requested.

5.3 Sample Handling and Documentation

Samples for laboratory analysis will be placed in laboratory-supplied containers. Sample containers will be labeled, logged on chain-of-custody forms, and placed in an ice-chilled cooler for transport to a California-certified laboratory for analysis. Samples will be tracked using chain-

[3] The STLC does not apply to elemental metals unless they exist in a friable, powdered or finely divided state. See 22 Cal. Code Regs., § 66261.24(a)(2)(A), footnote b.

of-custody forms. Copies of these documents will be maintained in the project files, as well as annotated in the applicable field logbook. Sample containers will be labeled with the following information:

- project name
- sample identification
- date and time of sample collection
- sampler's initials; and
- requested analyses.

Sample labels will be completed in waterproof, permanent ink, and will have a self-adhesive backing to allow for attachment to the sample container. Sample containers will be labeled and placed in a cooler for transportation to a California-certified analytical laboratory following chain-of custody protocols.

5.4 Extraction and Test Methods

Several extraction procedures will be used over the course of the study to evaluate metals leachability in treated and untreated MSR. These extraction procedures are summarized in Table 2.

To the extent possible, standard sample preparation techniques, as specified in regulation or agency guidance shall be followed and documented. However, the composition and texture of MSR differs from the types materials for which the extraction methods are generally intended, i.e., soil, sediment, sludge, etc. MSR contains various objects, up to 4 inches in size, including pieces of elemental metal, plastic, and foam. The WET procedure for Type i waste (millable solids) states:

> "If the sample contains non-friable solid particles which do not pass directly through a No. 10 sieve and which are extraneous and irrelevant as hazardous constituents to the waste or other material, they shall be removed to the extent feasible by mechanical means and discarded. [4]"

Adherence to this protocol would require the removal of all elemental metal objects and extraneous materials (e.g., rocks) greater than 2 millimeters in size (i.e., not passing a No. 10 sieve) prior to extraction using the WET. Furthermore, commercial analytical laboratories typically do not have milling equipment capable of milling solid metal objects. Given the heterogeneity of MSR, however, care will be taken to ensure that all components of the waste

[4] California Code of Regulations Title 22. Division 4.5. Environmental Health Standards for the Management of Hazardous Waste, Chapter 11. Identification and Listing of Hazardous Waste, Article 5. Categories of Hazardous Waste, Appendix II - Waste Extraction Test (WET) Procedures

stream, other than elemental metal objects, are represented in the sample matrix. Large pieces of other materials (e.g., plastic, foam, rubber) will be cut as necessary to ensure their inclusion in the sample.

5.5 Laboratory Analysis

Samples collected during this study will be submitted to an analytical laboratory certified by the California Department of Health Services through the National Environmental Laboratory Accreditation Program (NELAP). Samples will be submitted under strict chain-of-custody protocol, using appropriate preservation methods. The required volumes, preservation methods, holding times, and analytical reporting limits for each of the analytical methods are presented in Table 3. Consideration was initially given to submitting a certain percentage of treated samples to a second analytical laboratory. However, this was concluded to be unnecessary because all analyses will be performed by NELAP-certified labs using common analytical methods. Furthermore, the testing already includes the analysis of five replicates of each treatment, thereby providing a measure of variability.

6.0 PERFORMANCE CRITERIA

- Existing data will be reviewed to determine consistency with current MSR treatment, considering changes in MSR composition and treatment technologies over time.
- New WET data will be collected using representative samples of the MSR and TMSR streams. Where appropriate, the 90% UCL will be calculated, and compared with appropriate screening criteria, including current STLC values and TTLC values.
- Leachability and long-term leachability will be evaluated by comparing concentrations in leachate from extractions using fluids representative of potential landfill leachate, i.e., Municipal Solid Waste Leachate (MSWL) with appropriate groundwater screening criteria.
- Results of long-term leachability testing will be evaluated with respect to the added benefit of MSR treatment in protecting human health and the environment.
- The performance of reagent mixes will be evaluated relative to the cost of treatment.

7.0 TREATABILITY STUDY METHODOLOGY

The treatability study will be performed by Terraphase Engineering Inc. (Terraphase) and PRIMA Environmental, Inc. (PRIMA). Terraphase professionals have extensive experience in the design, implementation and oversight of treatability studies on a variety of materials, including soil, sediment, groundwater, and cement deep soil mixing (CDSM) residues. Terraphase has tested a wide range of treatment reagents, including cement, pozzolanic materials, calcium polysulfide, zero-valent iron, Fenton's reagent, and many organic substrates. Our experts have successfully designed and implemented treatment of metals throughout the United States. PRIMA is an independent treatability laboratory that specializes in treatability testing, technology evaluation, custom laboratory work and scientific consulting services for the environmental community. PRIMA is recognized as a premier treatability laboratory in California.

7.1 Baseline Analysis of Untreated Material

The goal of the initial phase of the study is to evaluate the characteristics of untreated MSR. Five subsamples, plus one duplicate sample, of the material collected from each of the three shredder facilities, and prepared according to the procedures discussed in Section 5, will be submitted for the analysis of the following constituents:

- the total concentration of Title 22 metals
- the extractable concentration of Title 22 metals, using each of the extraction tests specified in Section 5.3
- PCBs
- the aquatic toxicity bioassay
- moisture content
- pH
- alkalinity
- ignitability

The results of baseline analysis will be compiled and evaluated in terms of their bearing on the subsequent treatability study. Similar testing conducted over many years has shown that the principal metals of interest are lead, cadmium, and zinc. The remaining Title 22 metals are either not detected in MSR or are well below their respective regulatory limits. Metals that are determined during baseline analysis to be non-detect, or that are present at total concentrations less than 10 times their respective STLC, will be eliminated from the study.

7.2 Treatability Testing

The treatability testing will be conducted in three laboratory bench-test phases and a pilot-test phase, as follows:

- **Phase I Bench-Scale Test**: Screening of multiple treatment reagent combinations. Treated MSR leachability measured using WET. Treated MSR leachability of various reagent mixes compared to select a range of optimal treatments for further evaluation.
- **Phase II Bench-Scale Test**: Further evaluation of select treatment reagent combinations using a wide range of leachability tests.
- **Phase III Bench-Scale Test**: Evaluation of treatment longevity of select treatment reagent combinations using a multiple extraction procedure.
- **Pilot-Scale Test:** Evaluation of optimal treatment reagent combination at each shredder facility.

The results will be evaluated in terms of the effect of reagent additions on the extractable levels of regulated metals using appropriate statistical analysis; the long-term efficacy of treatment; and the scalability of the process to facility operations.

7.3 Phase 1 Bench-Scale Test: Multiple Reagent Combinations

The Phase 1 bench-scale test will evaluate treatment effectiveness as a function of the amount of silicate and alkaline activator added. The WET-leachability of MSR material treated with several combinations of silicate and alkaline activator will be measured to facilitate a comparison of effectiveness of the treatment combinations. The following nine combinations of silicate and alkaline activator will be tested on each composite from each shredder facility:

- silicate at 0.25 gal/ton and cement at
  - 5%,
  - 7%, and
  - 10%;
- silicate at 0.35 gal/ton and cement at
  - 5%,
  - 7%, and
  - 10%; and
- silicate at 0.5 gal/ton and cement at
  - 5%,
  - 7%, and
  - 10%

It is expected that five replicates will be prepared for each combination of silicate and activator. However, the number of replicates may vary, depending on the results of testing, as described in Section 5.1.

The test procedure will be as follows:

- 150 grams of MSR sample will be placed in a 500-mL clear, food-grade, plastic container with a sealable lid.
- The amount of silicate corresponding to a particular concentration will be mixed into the material. For example, in terms of the above range of silicate addition, for a 150-gram sample, on the order of 1 to 2 grams of silicate will be added to about 35 ml of water (a carrying agent) to ensure thorough wetting of the material. The mixing time will be 1 minute and will be accomplished by attaching the sealable lid and vigorously shaking the contents so that the material is thoroughly wetted by the silicate-water blend.
- The treatment is completed with the addition of the alkaline activator and subsequent mixing for 1 minute. For activator additions of 5% to 10%, the amount of added activator will be 7.5 to 10.0 grams. The mixing process is similar to that previously described and is intended to thoroughly incorporate the activator into the wetted material.
- The treated sample will be allowed to cure for 24 hours. Samples of treated and cured MSR will be submitted for analysis of WET-leachable metals, including those selected following evaluation of baseline results.

Subject to claims of business confidentiality, the report will describe each treatment chemical and reagent and will provide copies of MSDSs where available.

7.3.1 Data Evaluation

Analytical results from discrete samples, subject to QA/QC evaluation, will be included in the report. The WET-leachable metals data will be evaluated by comparing the results to untreated MSR WET-leachable data, to each other, and to the respective STLCs. Statistical analysis will be applied to the results of the treatability study data. Based on experience with MSR treatment, it is likely that the lead, zinc, and cadmium data will be evaluated, while the other metals concentrations will be below TTLC and STLC. The results will be grouped according to percent activator and silicate addition. The data analysis will include the evaluation of incremental reduction of WET-leachability over the range of reagent combinations.

Additional Phase 1 testing may be performed if (a) the data are inconclusive due to an insufficient number of samples, or (b) if data analysis indicates potential benefits to testing additional reagent combinations.

Three reagent combinations will be selected for Phase 2 testing. These reagent combinations will be selected to provide a range of treatment effectiveness, including moderate, high, and highest effectiveness, as ranked based on reduction of leachable metals concentrations.

7.4 Phase 2 Bench-Scale Test: Additional Leachability Testing

The leachability of MSR treated with selected combinations of reagents will be further evaluated using the extractions other than the WET, as presented in Table 2. Five replicates of untreated MSR from each shredder facility will be prepared with selected reagent combinations. The samples will be prepared using a larger mass of MSR, so that additional extraction procedures can be performed, as listed below:

- TCLP
- Synthetic Precipitation Leaching Procedure (SPLP)
- WET, using Municipal Solid Waste Leachate (MSWL) as the extracting solution

Also, WET will be performed after an additional week of curing, in order to evaluate the effect of curing time on treatment effectiveness.

The resulting extracts will be analyzed for those metals that were selected after evaluation of baseline results.

7.5 Phase 3 Bench-Scale Test: Long-Term Efficacy of Treatment

The long-term efficacy of the optimal treatment will be demonstrated through the application of the Multiple Extraction Procedure (MEP). This test evaluates the solubility of treated metals in an acid-rain environment. The Environmental Protection Agency (EPA) developed this procedure to simulate long-term leaching (for up to 1,000 years). The test is designed to mimic the natural, continuous replacement of fresh leachate that can occur in a solid waste landfill. The details of the test procedure are presented in the Federal Register/Vol.47, No. 225/Monday, November 22, 1982, page 52687, and also in Appendix 2 of Conner (1990). The procedure involves performing 10 consecutive extractions with an extracting fluid consisting of a 60/40 weight percent mixture of sulfuric and nitric acid added to distilled deionized water until the pH is 3.0±0.2 standard units (SU).

Depending on the results of Phase I and Phase II testing, this procedure will be applied to MSR treated with between one and three reagent combinations, with five replicates per reagent combination, plus five untreated MSR samples. The results of the extractions will be presented in a format that shows the change in extracted metal concentration as a function of the number of successive extractions. Previous MEP testing of treated MSR indicated that an equilibrium concentration was reached after the second extraction and remained unchanged with successive extractions whereas the untreated MSR continued to leach.

Comparable series of tests will be run using landfill leachate to demonstrate long-term effectiveness of the treatment in a solid waste landfill.

7.6 Pilot-Scale Field Test

Upon completion of bench-scale testing, those treatment formulas that are selected for further evaluation will be scaled up from bench-scale to pilot-scale field implementation, taking into consideration reagent storage and delivery methods, measurement of the amount of reagent delivered to the treatment process, the consistency of test results when compared with bench-scale results and historical data, any differences in mixing or curing times or methods, and other quality assurance considerations.

When collecting samples of treated MSR for subsequent analysis, the procedure described in Section 5.2 shall be followed, except that the sample shall be collected immediately after the point where the treated MSR passes the final magnet and before it falls onto the stockpile. Samples will not be collected from the pug mill during actual treatment operations because (1) the treatment process is not completed until the material exits the mill, and (2) collection of samples from the pug mill, while in operation, would pose unacceptable safety risks to personnel.

Samples from the pilot-scale test will be tested for WET-leachable metals. Data will be evaluated using the same approach as was described for the bench-scale tests.

7.7 Management of Treatment Residuals

Treatment residuals are expected to exceed certain total and soluble threshold limits. As a conservative measure, all treatment residuals will be managed and disposed of as non-RCRA hazardous waste.

7.8 Data Validation

The analytical data will be reviewed and data validation reports will be prepared. Analytical data will be reviewed in general accordance with the principles for data validation presented in the U.S. Environmental Protection Agency (U.S. EPA) National Functional Guidelines for Organic Laboratory Data Review (U.S. EPA 2008) and the USEPA National Functional Guidelines for Inorganic Laboratory Data Review (U.S. EPA 2004). The data will be reviewed in the following areas to evaluate potential impact on data quality:

- Data Completeness;
- Analytical Holding Times and Sample Preservation;
- Field and Laboratory Blank Samples;
- Laboratory Control Samples;
- Matrix Spike/Matrix Spike Duplicate Samples;
- Surrogate Compound Recovery; and

- Compound Quantitation.

8.0 REPORTING

A report will be prepared to present data from all phases of the proposed work. The report will include a summary of sampling activities, laboratory procedures, analytical results, data validation reports, and an evaluation of the results as compared with treatment goals. Data analysis will include the calculation of appropriate statistical measures, e.g., mean and upper confidence levels of extraction results. The relationship between extractable lead and extractable zinc will also be evaluated, with the additional consideration of treatment optimization and treatment costs.

Subject to claims of business confidentiality, the report will describe each treatment chemical and reagent and will provide copies of MSDSs where available.

8.1 Evaluation of Potential Impacts to Groundwater at Landfills

The potential toxicity of MSR in the landfill environment will be assessed, with particular emphasis on cadmium, lead and zinc. The published literature and landfill records will be reviewed to assess the impacts of untreated and treated MSR in the landfill environment. The results of the extraction procedures conducted as part of the Phase II and Phase III testing will be evaluated and compared with groundwater criteria.

8.2 Cost Analysis

The relative costs of treatment scenarios will also be evaluated. This evaluation will seek to determine the cost differential between a level of treatment that achieves current STLC values for all metals of interest and alternate levels of treatment. Costs will be considered both independently and in the context of the broader economics of the facility operation, taking into consideration fluctuating prices for raw materials and metal commodities. Treatment costs will include the cost of treatment chemicals and associated management costs (some of this information may be proprietary). Existing economic studies of the shredder industry will be used to the extent currently relevant. Much of the information used for this evaluation will be confidential business information and/or subject to limitations imposed by the antitrust laws. In addition, other potential environmental impacts associated with different levels of treatment will be evaluated on an industry-wide basis, including increased energy, greenhouse gas emissions, fuel consumption, and transportation-related emissions associated with transportation of raw materials and treated MSR.

9.0 SCHEDULE

The Treatability Study will be conducted according to the following timeline:

Task	Estimated Completion Date
Baseline characterization of untreated ASR	8/11/2014
Design treatment scenarios	8/22/2104
Conduct treatability studies	11/14/2014
Data analysis and preparation of report	12/12/2014
Submission of final report to DTSC	2/6/2015

Adjustments to this schedule may be made to accommodate site-specific considerations. The interim dates are considered goals or milestones, not enforceable deadlines.

10.0 REFERENCES

Conner, J. R. 1990. Chemical Fixation and Solidification of Hazardous Wastes. Van Nostrand Reinhold, New York.

Guatney, Mark J., and George J. Trezek. 2012. Treatment of Auto Shredder Residue. Report prepared for California Chapter of the Institute of Scrap Metal Recycling Industries. May 18.

U.S. Environmental Protection Agency (U.S. EPA). 1989. Stabilization/Solidification of CERCLA and RCRA Wastes. EPA/625/6-89/022.

_____. 2004. U.S. EPA Contract Laboratory Program National Functional Guidelines for Inorganic Data Review. Office of Solid Waste and Emergency Response. EPA 540-R-04-004.

_____. 2005. Manual for the Certification of Laboratories Analyzing Drinking Water Criteria and Procedures Quality Assurance. 815-R-05-004. 5th Edition. January.

_____. 2006. Guidance on Systematic Planning Using the Data Quality Objectives Process EPA QA/G-4.

_____. 2008. U.S. EPA Contract Laboratory Program National Functional Guidelines for Superfund Organic Data Review. Office of Solid Waste and Emergency Response. EPA 540-R-08-01.

_____. 2009. Technology Performance Review: Selecting and Using Solidification/Stabilization Treatment for Site Remediation. EPA/600/R-09/148.

Trezek, G. J. 1994. Remediation of heavy metal contaminated solids using polysilicates. In *Process Engineering for Pollution Control and Waste Minimization*. Edited by Wise, D. J and Trantolo, D. J, Chapter 20. Marcel Dekker, Inc., New York, N.Y.

TABLES

THIS PAGE LEFT INTENTIONALLY BLANK

Table 1
Historical MSR Treatment Results

Cement %	Silicate (gal/ton)	Lead Untreated (mg/L)	Lead Treated (mg/L)	Zinc Untreated (mg/L)	Zinc Treated (mg/L)
5-6	0.5	43.2	2.41	1,668	642.0
5-6	0.5	39.4	4.04	1,700	898.0
5-6	0.5	40.4	2.25	1,440	570.0
mean		41.0	2.90	1,603	703.3
sd		2.0	0.99	142	172.4
90% UCL		43.1	3.98	1,757	891
10-12	0.55	40.0	1.07	1,530	19.7
10-12	0.55	33.8	1.45	1,900	46.0
10-12	0.55	27.1	2.70	1,560	88.2
10-12	0.55	34.8	0.49	1,590	5.2
mean		33.9	1.43	1,645	39.8
sd		4.6	0.81	149	31.5
90% UCL		37.7	2.09	1,767	65.6
7-9	0.35	17.7	0.81	1,610	5.4
7-9	0.35	61.8	2.11	1,770	600.0
7-9	0.35	24.9	0.54	1,600	6.7
7-9	0.35	28.9	2.03	1,530	447.0
mean		33.3	1.37	1,628	264.8
sd		16.9	0.70	88	264.3
90% UCL		47.2	1.95	1,699	481.3

Notes:
gal/ton = gallons per ton
mg/L = milligrams per liter
sd = standard deviation
UCL = upper confidence level

Table 2
Extraction Test Procedures

Procedure	Extraction/Test	Analytical Method
WET	Extraction with citrate buffer	22 CCR, Div 4.5, Ch. 11, Art. 5, App. II
TCLP	Extraction with acetate buffer	EPA Method 1311
SPLP	Extraction with synthetic rainwater	EPA Method 1320
TCLP, WET or SPLP using municipal solid waste leachate (MSWL)	Extraction with MWSL	As required for TCLP, WET, or SPLP
Selected total metals quantitation	Digestion with hydrochloric and nitric acid	EPA Method 6010

Notes:
WET = Waste Extraction Test
TCLP = Toxicity Characteristic Leaching Procedure
SPLP = Synthetic Precipitation Leaching Procedure

Table 3
Analytical Laboratory Methods, Sample Requirements, and Reporting Limits

Analyte	Method	Container	Minimum Sample Mass (g)	Preservation	Hold Time (days)	Reporting Limits
Metals	EPA 6010B/6020	glass jar	5	None	180 (24 for Mercury)	0.02 - 1 mg/kg
Metals (TCLP)	CCR T22.11.5.A-II / EPA 1311/1312	glass jar	100	None	180 (after extraction)	0.2 - 20 µg/L
Metals (WET)	CCR T22.11.5.A-II / EPA 1311/1312	glass jar	50	None	180 (after extraction)	0.2 - 20 µg/L
Metals (WET using MSWL)	Modified CCR T22.11.5.A-II / EPA 1311/1312	glass jar	50	None	180 (after extraction)	0.2 - 20 µg/L
Metals (SPLP)	CCR T22.11.5.A-II / EPA 1311/1312	glass jar	100	None	180 (after extraction)	0.2 - 20 µg/L
PCBs	EPA 8082	glass jar	30	chill to 4 ± 2°C	14/40*	12 - 24 µg/kg
96-Hour Aquatic Toxicity, Haz Waste	CA Dept. Fish & Game	glass jar	100	chill to 4 ± 2°C	7	1%
Moisture content	ASTM D2216	glass jar	20	chill to 4 ± 2°C	10	0.1%
pH	EPA 9045D	glass jar	20	chill to 4 ± 2°C	Samples should be analyzed as soon as possible	0.1 SU
Alkalinity	SM 2320 B	glass jar	20	chill to 4 ± 2°C	14	2 mg/kg
Ignitability	EPA 1030	glass jar	100	None	14	Yes/No

Notes:
*VOCs include: 1,1-dichloroethane, 1,1-dichloroethene, 1,2-dichloroethane, cis-1,2-dichloroethene, trans-1,2-dichloroethene, trichloroethene, and vinyl chloride
ASTM = American Society for Testing and Materials
L = liters
CCR = California Code of Regulations
EPA = Environmental Protection Agency
mL = milliliters
ug/L = micrograms per liter
g = grams
mg/kg = milligrams per kilogram
* = see text for list of metals
* = extraction/analysis
reporting limits may vary depending on matrix interference and dilution
°C = degrees Celsius
SU = standard units

APPENDIX A

THIS PAGE LEFT INTENTIONALLY BLANK

TREATMENT
OF
AUTO SHREDDER RESIDUE

Prepared for:

CALIFORNIA CHAPTER

INSTITUTE OF SCRAP RECYCLING INDUSTRIES (ISRI)

Prepared by:

Mark J. Guatney, CHMM
Dir. of Environmental Services
Envirosure Solutions, LLC

George J. Trezek, Ph.D.
Emeritus Professor
Univ. of California, Berkeley

May 18, 2012

TABLE OF CONTENTS

I. BACKGROUND/HISTORY OF ISSUE 1

II. DESCRIPTION OF THE PROCESS THAT RESULTS IN THE GENERATION OF ASR 3

III. DESCRIPTION OF UNTREATED ASR 4

A. PHYSICAL CHARACTERISTICS 5
B. CHEMICAL CHARACTERISTICS 5
C. PRE-TREATMENT LEVELS OF HEAVY METALS 6

IV. DESCRIPTION OF TREATMENT PROCESS 8

A. CHEMICALS, POZZOLANIC MATERIALS AND EQUIPMENT USED IN THE PROCESS 8
B. SOLUBLE SILICATE SOLUTION 9
C. ALKALINE ACTIVATOR 9
D. EQUIPMENT AND PROCESS FOR TREATMENT 9
E. TREATMENT SYSTEM CONTROL AND CALIBRATION 10

V. CHEMISTRY OF TREATMENT PROCESS 12

A. METAL OXIDES TO METAL-SILICATES 12
B. CHEMICAL REACTION, NOT DILUTION 16
C. INFLUENCE OF PARTICLE SIZE 16

VI. LONG-TERM EFFECTIVENESS OF TREATMENT PROCESS 17

A. HISTORICAL ASR TREATABILITY STUDIES 19
B. RECENT ASR TREATABILITY STUDIES 22

VII. TREATED ASR – CHARACTERIZATION DATA REQUIRED BY LANDFILLS 26

A. LANDFILL LEACHATE TEST DATA 26
C. TREATED ASR CHARACTERIZATION DATA (TOTAL AND WET) 26

VIII. CONCLUSIONS 30

IX. REFERENCES 31

Figures

Figure 1: **Process Flow Diagram of Auto Shredding and Separation Processes**
Figure 2: **Formation of Liquid Silicate Polymer**
Figure 3: **Polysilicate Reaction with Metallic Elements**
Figure 4: **Portland Cement Reactions**
Figure 5: **Log Graph of 3-Metal Concentration Using Multiple Extractions**

Tables

Table 1: **STLC Metal Values in Untreated ASR**
Table 2: **Long-Term Effectiveness Study Using Multiple Extractions**
Table 3: **Historical ASR Treatability Data**
Table 4: **Recent Treatability Data Using Belt-Collected ASR Samples**
Table 5: **Comparison of Treatment Formulations**
Table 6: **Summary of Landfill Leachate Testing of Treated ASR**
Table 7: **Total and WET Results for Treated ASR**

I. BACKGROUND/HISTORY OF ISSUE

Auto shredder residue (ASR) is generated by scrap metal shredding facilities as a result of the process of separating specification grade metal from a huge array of recyclable scrap metals including car bodies, household appliances, manufactured metal products and myriad other types of miscellaneous scrap metal. Since the mid- to late-1980s, shredder facilities in California have treated ASR using an in-line chemical fixation process to stabilize residual soluble metals prior to beneficial use or, less often, disposal of the treated material. The purpose of this Technical Memorandum is to explain how the treatment process is conducted, the types of materials and equipment that are used, the nature of the chemical reactions that occur in the process, and how these reactions bind residual heavy metals in the ASR so as to minimize their leaching potential over time. The vast majority of treated ASR is beneficially used as Alternative Daily Cover in nonhazardous waste landfills across the state, and is not subject to the more acidic environments that can be present in hazardous waste landfills. A survey of landfill leachate data conducted by the auto recycling industry in 2009, and submitted to the Department of Toxic Substances Control (DTSC), did not identify any instance where groundwater has been adversely affected by heavy metals in treated or untreated ASR deposited in those landfills.

The treatment process was developed in the mid-1980s in response to the classification of auto shredder residue as a California-only (non-RCRA) hazardous waste under the state hazardous waste regulations that were adopted by the Department of Health Services (DHS) (the predecessor agency to DTSC) in 1984. Prior to the adoption of those regulations, ASR was regulated as a nonhazardous solid waste and was disposed of in municipal landfills without treatment. DHS regulations established a variety of ways that wastes could be classified as hazardous wastes under California law, including the presence of heavy metals in concentrations that exceeded specified Total Threshold Limit Concentrations (TTLCs) or Soluble Threshold Limit Concentrations (STLCs), the latter as determined by the California Waste Extraction Test (WET). TTLCs and STLCs were adopted for a number of heavy metals commonly found in ASR, including lead, copper, cadmium and zinc.

Collectively, California metal shredder operations produce very large quantities of ASR (ranging from 500,000 to 700,000 tons per year). There are multiple obstacles (both regulatory and economic) to reducing this volume through waste minimization and recycling programs, e.g., regulatory impediments to recycling plastics. Shredder operators implement inbound material acceptance policies that require the rejection or removal of a wide variety of hazardous materials, hazardous wastes, and other “materials requiring special handling,” as required by law or as necessary to ensure safe operations. This serves to minimize hazardous constituents in the ASR, but does little to reduce the overall volume. It was recognized by DHS that the costs associated with managing this very large volume of residual material as a hazardous waste were not

warranted based on the insignificant hazard posed by the material. At the same time, DHS recognized that the cost of managing ASR as hazardous waste would impose severe economic hardship on the shredder/recycling industry and alter the economics of the industry in a way that could destroy its viability. Aside from loss of jobs, loss of the industry in California would lead to the improper handling of discarded vehicles, old appliances and other scrap metal, to the detriment of public health and safety and the environment. Thus, development of an effective in-line treatment process was seen as a means to allow ASR to continue to be managed as a nonhazardous waste and to maintain the viability of metal recycling for the benefit of the public.

Following implementation of the treatment process, the shredder operators applied for reclassification of the treated ASR as non-hazardous waste under then § 66305(e) of the Title 22 regulations (since recodified as § 66260.200(f)), on the grounds that the waste possessed mitigating physical and chemical characteristics that rendered it insignificant as a hazard to human health and the environment. Each application was supported by analytical data that compared the solubility of key heavy metals (primarily lead and cadmium) in the waste before and after treatment. Each of the applications for reclassification was granted based on the demonstrated effectiveness of the treatment process. These reclassification letters have set the standard for ASR treatment and beneficial reuse for over 25 years.

DTSC has requested preparation of a Technical Memorandum on the ASR treatment process in connection with its review of the regulatory status of treated ASR and consideration of possible alternative management standards for treated ASR. DTSC's evaluation of the long-term effectiveness of the treatment process, and the use of treated ASR as alternative daily cover in nonhazardous waste landfills, is a critical component of this regulatory strategy.

II. Description of the process that results in the generation of ASR

ASR is generated during the recycling of end-of-life manufactured "light iron" products such as automobiles and household appliances, as well as a huge variety of other types of recyclable scrap metal (ISRI, 2011). The term "auto shredder" comes from the initial step in the recycling process in which the recyclable material feedstock (frequently containing flattened car bodies) is placed by material handler or conveyed into a large hammermill shredder to reduce the size of the scrap metal into smaller pieces that can be more easily handled and separated by material type into specification-grade scrap metal commodities. Although the term ASR implies a dedicated in-feed of scrap automobiles, ISRI has estimated that as much as 40% of ASR derives from end-of-life appliances (Hook, 2008). In the second step of the recycling process, large electromagnets are used to separate most of the ferrous metal (e.g., steel) from the nonferrous metals (e.g., copper, aluminum and stainless steel) and other non-metallic materials contained in the shredder output ("aggregate").

Once the ferrous metal (or "shred") has been separated from the shredder aggregate, trommels and other kinds of "downstream" separation equipment are used to separate and size the remaining materials into different fractions so that they can be further processed to optimize removal of valuable metals. These fractions can be based on weight, density or other readily distinguishable physical properties. Specification-grade nonferrous metal is typically separated from the non-metallic material by eddy current separators (which create a means for magnetic separation of the nonferrous metals) and, more recently, by more advanced mechanical separation methods (e.g., optical sortation). Other types of specialized equipment may be used to sort the nonferrous metals and other materials into a variety of recyclable commodities. Depending on the sophistication of the material separation stages that are employed, the recyclable materials can be size-sorted and density-sorted onto separate conveyor belts to improve the recovery rate of different types of nonferrous metals and other recyclable commodities. In addition, manual labor may be used along certain conveyor belts to hand-separate larger pieces of nonferrous metals, and additional magnets may also be positioned to separate out remaining ferrous metals.

The largely non-metallic material remaining after the various magnetic, mechanical and manual separation steps is referred to as ASR. The ASR is treated by the process described in this paper, which includes final screening by a magnet installed downstream of the treatment process to collect any remaining ferrous metal after the in-line treatment process.

A flow chart depicting a typical auto shredding and "downstream" material separation processes is presented in Figure 1.

Figure 1: Process Flow Diagram of Auto Shredding and Separation Processes

III. Description of Untreated ASR

The Vehicle Recycling Partnership, LLC (VRP) estimates that up to 84% (by weight) of a shredded automobile is separated into specification-grade metals by the scrap recycling industry (Metal Bulletin Daily, 2008). USEPA estimates are slightly more conservative at 75% to 80% (USEPA, 2011a). The remaining 16% to 25% of the recycled automobile becomes ASR. Current estimates suggest that more than 5 million tons of ASR is produced in the U.S. each year, and nearly all of this is used as Alternative Daily Cover or landfilled as waste (USEPA, 2011a). California is one of the few states that require treatment of ASR prior to placement in a solid waste landfill for either disposal or use as Alternative Daily Cover.

While generally homogeneous and soil-like in overall appearance, ASR is actually a highly heterogeneous mix of material which typically includes plastics, rubber, foam, fabric, carpet, glass, wood, road dirt, and debris, along with a small amount of residual (primarily nonferrous) metal that was not removed by the prior separation processes. These materials make up a complex mix of sizes, shapes, and densities with physical and chemical properties as described in Subsections A and B below. As noted by USEPA (2011a), research on ASR composition by Hook (2008) and DeGaspari (1999) determined that plastics represent approximately 30% of ASR's weight. Foam represents approximately 5% by weight, but up to 30% of the volume of ASR.

A. Physical Characteristics

The physical characteristics of ASR range from granular particles (e.g., sand and soil) to identifiable pieces of carpeting, wood, foam, or plastic sometimes exceeding 5 inches in cross section. While, historically, California shredders treated only the smaller fractions of ASR (which were referred to as "fines"), the treatment process has evolved over time so that now all but the largest fraction of materials contained in ASR (plus 4-inches) is treated. The plus 4-inch materials are typically returned to the shredder for re-processing.

B. Chemical Characteristics

The chemical characteristics of ASR are typified by the presence of a very small amount of residual metals, such as lead, cadmium, copper and zinc, as well as various petroleum hydrocarbons (e.g., lubricating oils and other residual automotive fluids) and PCBs. Concentrations of certain residual metals in untreated ASR can approach or exceed California TTLCs and STLCs. For example, untreated ASR often contains total lead in excess of 1,000 mg/kg and WET extractable lead in excess of 5 mg/l. These constituents are also detected in samples of treated ASR collected by the shredders to comply with the requirements of the receiving landfills, although the extractable concentrations of metals are significantly reduced as

a result of the treatment process. Concentrations of petroleum hydrocarbons, PCBs, VOCs and SVOCs are typically far below levels that would cause ASR to be classified as hazardous based on these constituents.

The residual metals found in ASR are constituents of the raw (unprocessed) scrap originally fed into the shredder. The limited chemical characteristics of untreated ASR reflect the significant efforts of the shredder facilities and their upstream suppliers to keep hazardous materials out of shredder feedstock in the first instance. Each auto shredder facility implements an inbound material acceptance policy that prohibits the inclusion of a range of hazardous materials in the shredder in-feed material. Each facility engages in stringent practices to enforce these prohibitions, including gate inspections of incoming loads of scrap by trained inspectors to identify prohibited materials in the incoming loads and yard inspections at various points en route to and at the entrance to the shredding process. Facilities also participate in the state-mandated programs to require suppliers to remove "materials requiring special handling" from automobiles and appliances prior to crushing and delivery to the facility, and to remove mercury switches, batteries and other hazardous materials from scrap auto bodies. Automotive fluids (fuels, lubricating oils, transmission fluid, antifreeze, etc.) are also drained from the vehicles prior to crushing and delivery to the shredder facility. In some cases, vehicles and appliances are received directly at the shredder facilities without having been prepared for recycling by an auto dismantler or a certified appliance recycler. Procedures are in place at the shredder facilities to remove all prohibited materials from these vehicles and appliances before they are shredded. Each of the shredder facilities reviewed for this report is a certified auto dismantler and appliance recycler.

C. Pre-Treatment Levels of Heavy Metals

Examples of recent WET extractable metal data from untreated ASR are provided in Table 1.

Table 1
WET Metal Values in Untreated ASR (mg/L)

Sample Date	Cd	Pb	Zn	Cu
6/18/2009	0.086	**58.7**	**925**	1.25
7/28/2009	**1.29**	**41.8**	**1320**	2.66
8/21/2009	0.657	**88.3**	**1423**	0.426
11/12/2009	**1.25**	**49.6**	**1456**	5.98
5/19/2010	**2.57**	**155**	**864**	6.83
10/26/2010	**2.09**	**109**	**2603**	9.1
1/5/2011	**1.62**	**86.7**	**1685**	3.97
1/25/2011	0.64	**74.4**	**1025**	3.35
4/28/2011	**1.26**	**68.9**	**1110**	4.51
10/31/2011	**1.86**	29.4	**1970**	4.60
11/7/2011	**1.79**	**51.0**	**1525**	2.03
Regulatory Values (CCR, Title 22 Ch. 11, § 66261.24)	**1**	**50***	**250**	**25**

Bold numbers indicate values at or above the STLC value.

* Each of the reclassification letters issued to the shredders allows a soluble lead concentration of 50 mg/L. The requirements of the reclassification letters vary with respect to other Title 22 metals.

IV. DESCRIPTION OF TREATMENT PROCESS

The treatment process at the three auto shredder facilities reviewed for this Technical Memorandum involves a chemical reaction between the ASR and inorganic binders that results in the binding and fixation of heavy metals in the ASR, thus reducing their leaching potential.

Treatment processes that chemically bind heavy metals in a solid or semi-solid matrix are referred to by USEPA as *Stabilization* treatment. Stabilization has been shown to be effective for a wide range of constituents including lead, arsenic, and chromium (USEPA, 2009). Stabilization and a similar process called *Solidification* are common remediation technologies employed at state and federal Superfund sites. USEPA estimates that 23% of the source control remedies performed at these sites between 1982 and 2005 involved the use of solidification or stabilization, and 94% of the solidification/stabilization remediations performed included inorganic binders such as cement, fly ash, lime, phosphate, soluble silicates, or sulfur (USEPA, 2009). The treatment technologies and terms Stabilization and Solidification were originally described in USEPA's "Guide to the Disposal of Chemically Stabilized and Solidified Waste" (USEPA, 1980). Unlike Solidification, which requires a substantial amount of cement or other inorganic binder to form a solid mass of material, Stabilization relies on reducing the contaminants' mobility through physical or chemical reactions involving precipitation, complexation, and adsorption (USEPA, 2006). The usefulness of this approach for stabilizing lead-impacted soil is described in the peer-reviewed *Emerging Technologies for the Remediation of Metals in Soils* by Interstate Technology and Regulatory Cooperation Working Group (ITRC, 1997).

The specific technology used to chemically bind the metals in the ASR matrix consists of the application of a blend of liquid polysilicates and additives (usually wetting agents), followed by the addition of an inorganic binder and alkaline activator (AA) such as cement, lime, or other pozzolanic materials. Depending upon the supplier, various types of silicate blends, using either potassium or sodium silicate with proprietary additives, are available and used by the auto shredding industry. Despite the variations in proprietary blends, the same basic principles of chemical reaction apply in each case.

A. CHEMICALS, POZZOLANIC MATERIALS AND EQUIPMENT USED IN THE PROCESS

The ASR treatment process, as currently conducted, uses one of two proprietary, soluble polysilicate solutions (with potassium silicate or sodium silicate as the active ingredient), and a form of pozzolanic (cementitious) material which functions as an alkaline activator (AA) in the process. The following sections discuss these liquid and dry additives, along with the process equipment necessary to deliver the treatment technology. Different treatment chemicals are

evaluated from time to time, and may be used in lieu of the chemicals described in this report if determined to be more cost-effective.

B. Soluble Silicate Solution

Two of the three auto shredder facilities in California that treat their ASR use a commercially-available product known as Metbond MCX-90, manufactured by Envirokem Engineering Services, LLC of Stockton, California. The active ingredient in Metbond MCX-90 is sodium silicate complex, with pH in the 10+ range (i.e., non-concentrate) (Envirokem, 2008). The Metbond MCX-90 system employs mixing tanks and a chemical-to-water mix ratio of 3% to 20% by weight, depending on the moisture content of the ASR.

The third auto shredder facility uses a product known as HP Treatment, which is manufactured by C.C.I. Chemical Corporation (formerly Cherokee Chemical), with corporate offices in Vernon, California (C.C.I., 2011). The active ingredient in HP Treatment is potassium silicate, with a pH of approximately 11.2. This product was developed by C.C.I. and the auto shredder client and includes a single-user proprietary blend. The HP Treatment system employs an in-line mixing process, and water-to-chemical mix ratio of approximately 13 to 1.

In addition to the water that is added to the polysilicate solution prior to application to ASR, the ASR itself is wetted during the shredding and separation stages, and it enters the treatment system with an average moisture content between 15% and 30% by weight.

C. Alkaline Activator

The California auto shredder facilities that treat ASR use Portland cement, fly ash, lime or similar dry pozzolanic material as the alkaline activator (AA). Based on the MSDS sheet for Portland Cement manufactured by CEMEX, of Victorville, California, Portland Cement has a pH in water of 12 +, and a specific gravity of 3.15 (CEMEX, 2001). Calcium salts in the blend may include: $2CaO.SiO_2$, $3CaO.Al_2O_2$, $4CaO.Al_2O_3Fe_2O_3$, and $CaSO_4.2H_2O$. Small quantities of other salts such as MgO, K_2SO_4, and Na_2SO_4 may also be included (CEMEX, 2001).

D. Equipment and Process for Treatment

Although the actual equipment may vary at different shredding facilities, the basic approach for delivering the silicate treatment is very similar. A brief description of the equipment and process follows.

The first step in the process is to thoroughly wet the material requiring treatment with the silicate blend. This is accomplished by creating a silicate/water mixture and applying it to the untreated ASR. Typically, this mixture is delivered through sprays which impinge on the material as it

leaves the downstream nonferrous separation system conveyor belt. In some cases a two-compartment tank is used to create the silicate/water mixture. Here, the concentrated silicate blend from one compartment is metered along with water into a second compartment and is then pumped to a series of spray nozzles. In this case, the water acts as the carrier for the silicate blend so that the ASR can be wetted, thereby ensuring the even distribution of silicates throughout the material.

The amount of silicate necessary to effectively treat the ASR has been established through treatability studies conducted in the past, and is added in proportion to the amount of material requiring treatment. For example, if 40 tons/hour of ASR requires treatment and the appropriate silicate addition is 0.5 gallons/ton, then 20 gallons/hour of silicate concentrate would be added to the mixing tank. The amount of water/silicate mixture sprayed from the mixing tank has been determined through experience to be sufficient to ensure thorough treatment of the material. Since the water content of the in-feed to the treatment system varies (mainly due to the amount of water added in the shredder), the spray rate is adjustable to avoid free-liquid or oversaturation of the ASR. However, the amount of silicate that is added does not change.

Another method of silicate addition involves the use of a foam in-line jet pump mixer. In this application, the concentrated silicate blend is drawn from a silicate concentrate container by a combination of pressurized water and compressor airflow and sprayed onto the ASR as it falls off the end of a discharge conveyor. Adjustments can be made to the flow rates of water and silicate blend in this system, but typically the flow rate is set for the maximum feed rate of ASR on the belt.

The addition of the alkaline activator (AA) is the final step in the treatment process. After the ASR has been wetted with silicate/water solution, it enters a pug mill mixer. After an appropriate residence time in the mixer, the dry AA is introduced into the pug mill from an intermediate storage hopper, pneumatically connected to a large storage silo, via a set of variable speed metering screws. At some facilities the AA is metered directly from the silo, and multiple silos are used. The amount of AA required is a function of the known (predictable) range of concentrations of metals typically present in ASR and type of AA in use. Each system reviewed for this report included a computer-controlled metering of the AA, based on the conveyor belt weight of the ASR to be treated.

E. Treatment System Control and Calibration

Sampling and analysis over time has shown that shredder facilities process a relatively consistent mix of scrap, auto bodies and “tin” such that the levels of metals in shredder residue tend to remain within a relatively narrow range or band of concentrations. The treatment levels are conservatively adjusted to the higher end of the range.

The treatment process has also evolved over time, with an eye towards optimizing the process and allowing use of different, more effective or more economical treatment chemicals. Periodic sampling of the treated ASR is also used to adjust the ratios of silicates and AA to achieve the reductions in extractable metals in the treated ASR, as necessary to comply with applicable Waste Discharge Requirements of the receiving landfills or the conditions, if any, of the facilities' reclassification letters. The treatment systems are designed so that adjustments can be made to the amount of wet or dry chemicals required.

V. Chemistry of Treatment Process

The following section describes the chemistry involved in the ASR treatment process.

A. Metal Oxides to Metal-Silicates

The metals in ASR are typically present in the oxide form. Due to the strong affinity of silicates for metallic/metal oxide compounds, these metals react with the silicates, resulting in the production of compounds referred to as metal-silicates. The chemistry of the process requires two components for the development of metal-silicates. The first is a soluble reactive silicate complex and the second is the AA which creates a high alkalinity environment to enhance the dissolution reaction of the metallic particles in the ASR. The reactive silicate is formulated to react with the available metals to create the insoluble metal-silicates. The metal speciation determines the metal-silicate solubility and required dose for treatment. Furthermore, the reactive silicate is formulated to inhibit the formation of metal hydroxides. The process is a water base reaction where both reagents are thoroughly mixed with the ASR.

A detailed description of the chemical reaction equations is given in "Remediation of Heavy Metal Contaminated Solids Using Polysilicates," (Trezek, 1994). Example chemical equations involved in formation of liquid silicate polymer, its fixation to metallic elements, and Portland cement reaction are repeated in Figures 2 through 4.

Figure 2: Formation of Liquid Silicate Polymer

Water

$$2\ H_2O \leftrightarrow H_3O^+ + OH^-$$

Liquid Silicate

1.

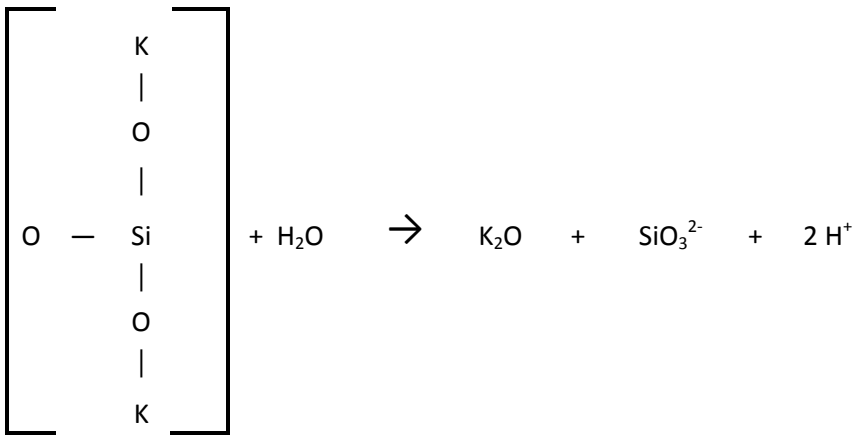

2.

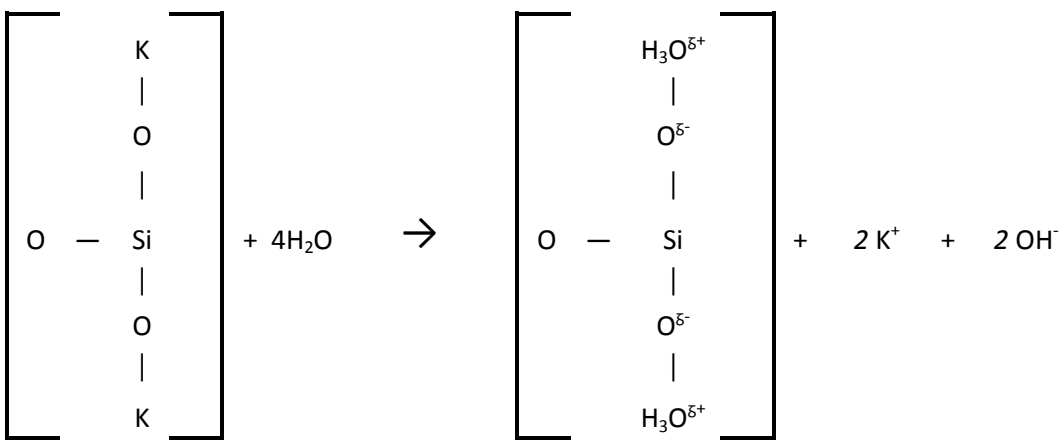

As noted above, the liquid silicates depolymerize when mixed with water, and thereby expose their negatively charged oxygen sites. Silicone backbones continue to break down in water, creating ionically charged clusters.

Figure 3: Polysilicate Reaction with Metallic Elements

When ASR with active metallic elements is introduced, the reaction can be characterized as follows:

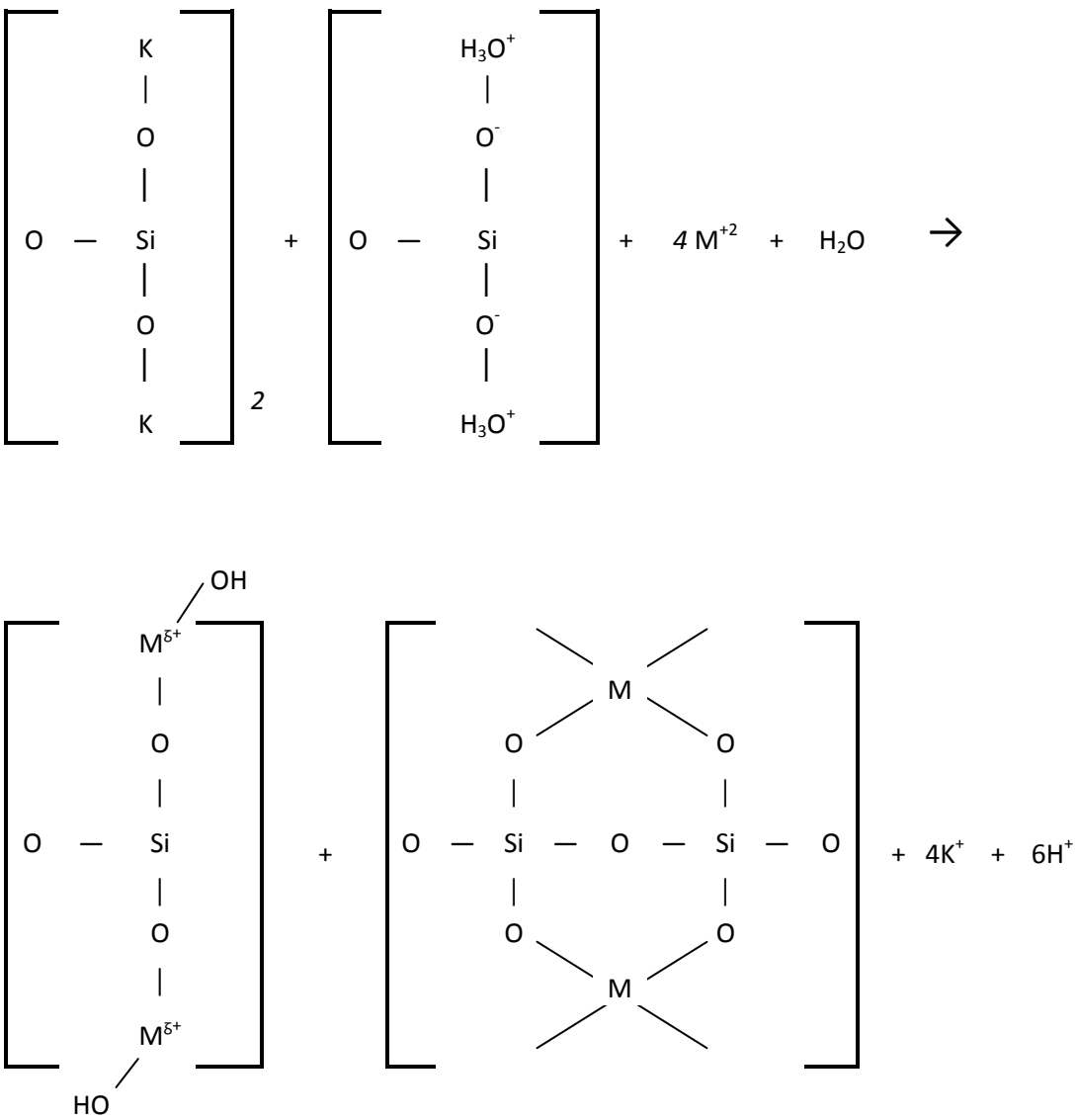

The evidence of structural changes in treated materials has been recorded through the application of electron microscopy and X-ray diffraction studies conducted at the Eitle Institute of Silicate Science under the direction of Professor William Kneller (Krofchak, 1979). These studies and analysis identified the presence of silicate compounds in a comparison of before and after treated material. For more information on these microscopic studies of the silicate reactions, please refer to the Krofchak reference included in Section IX.

Once the polysilicate solution has been added and thoroughly mixed with the ASR, a dry AA such as Portland cement is added to the partially-treated ASR in the pug mill. The addition of Portland cement to the treatment process yields the following reactions:

Figure 4: Portland Cement Reactions (in cement chemistry notation)

$$2C_3{\cdot}S + 6H \rightarrow 3C{\cdot}2S{\cdot}3H + 3(CH)$$

$$2C_2{\cdot}S + 4H \rightarrow 3C{\cdot}2S{\cdot}3H + CH$$

$$4C{\cdot}A{\cdot}F + 10H + 2(CH) \rightarrow 6C{\cdot}A{\cdot}F{\cdot}12H$$

$$3C{\cdot}A + 12H + CH \rightarrow 3C{\cdot}A{\cdot}CH{\cdot}12H$$

$$3C{\cdot}A + 10H + C\overline{S}{\cdot}2H \rightarrow 3C{\cdot}A{\cdot}C\overline{S}{\cdot}12H$$

Where: $C = CaO$, $S = SiO_2$, $H = H_2O$, $A = Al_2O_3$, $F = Fe_2O_3$, $C\overline{S} = CaSO_4$, (USEPA, 2008, p. A-3).

Although, at the time this report was prepared, each of the auto shredders reviewed for this report was using Portland cement as its AA additive, similar reactions and results can be achieved by using other pozzolanic AA additives.

The underlying principle of the technology is the transformation of the metal oxides into insoluble metal-silicates. Thus, it is the silicates that are the primary treatment chemical, with the AA in the supporting role of pH adjuster. The solubility curves of the primary metals of concern, such as lead, cadmium, zinc, have parabolic shapes with the lowest solubility inflection points falling within a range of approximately 9.5 to 11 on the pH scale (Cullinane, Jones & Malone, 1986). It is the behavior of these curves that controls the optimum amount of AA addition. For example, if a five percent addition gives good results, doubling the amount to ten percent will not be twice as effective. Instead, this action would result in a shift to a higher part of the solubility curve or a higher solubility constant. Controlling the amount of AA addition is part of the ongoing monitoring process, and is necessary to maximize treatment efficiency and minimize the cost of treatment additives and the incremental increase in the weight of the treated ASR.

B. Chemical Reaction, Not Dilution

Dilution is not a factor in this treatment process, as seen by a simple mass balance of metal solubility and treated ASR weight increases. If the addition of silicates and AA increase the overall treated weight of ASR by 5% to 10%, then simple dilution would decrease the soluble metal concentrations by a similar amount. However, test results show that reductions in metal solubility are in the range of 67% to 99% for the primary metals of concern in ASR samples (Cd, Pb and Zn). See Table 3.

It should also be noted that the silicate treatment is designed to reduce only metal leachability or solubility. This treatment does not alter the total concentration of metals in the ASR beyond the modest decline associated with an increase in weight due to the addition of 5% to 10% cement or other AA.

C. Influence of Particle Size

The reduction of metals leachability in the ASR is caused by the chemical reactions previously described, as well as by the increase in small particle size attributed to the adsorption of silicate followed by the AA binder. The addition of silicates reduces the time required for curing of the cementitious AA binder, and increases its hardness and resistance to acid attack (PQ® Corp, 2011). This effect was studied by Davis, Krumrine, Boyce and Falcone in the mid-1980s. Their experiments determined that the time required for a highly acidic solution to leach away 50% of a 2 cm particle size can be increased 100-fold by the addition of soluble silicates (Davis, Krumrine, Boyce, and Falcone, 1986). Experiments by Dr. Trezek in the 1980s also confirmed that this significant reduction in metals leachability is even more pronounced in smaller particles, when exposed to multiple simulated landfill leachate extractions using either of two dilute acidic solutions (Trezek, 1994). These experiments and others, along with the known characteristic of cementitious materials to continue to harden for years after initial reaction, confirm that the effectiveness of the treatment will continue after the ASR is placed in the landfill environment. The long-term effectiveness of the treatment process is discussed in Section VI.

VI. LONG-TERM EFFECTIVENESS OF TREATMENT PROCESS

As part of the early development of the polysilicate treatment technology in the late 1980s, Dr. Trezek studied the effect of metals leachability during successive extractions on identical samples of treated and untreated soil media (Trezek, 1994). In order to evaluate the durability or time-dependent stability of treated material, USEPA developed the Multiple Extraction Procedure (MEP) as a test method. The details of this procedure are described in SW-846, Method 1320 (USEPA, 1986). The California Waste Extraction Test (WET) and the Multiple Extraction Procedure were applied sequentially to soil contaminated with copper, lead, and zinc.

This treatability study included one initial extraction by the California WET method and nine additional extractions of the same sample by EPA Method 1320. The results of the initial WET on the untreated soil yielded extractable metal concentrations of 22 mg/l for copper, 110 mg/l for lead, and 106 mg/l for zinc (a total of 238 mg/l for all three metals) (Trezek, 1994). Comparisons between the treated and untreated samples, and subsequent extraction results, were performed using the extractable total of all three metals. Results of these multiple extraction tests are tabulated below, and graphed in Figure 5, which follows.

Table 2
Long-Term Effectiveness Study Using Multiple Extractions

Extraction/Method	Untreated 3-Metal Conc. (mg/l)	Treated 3-Metal Conc. (mg/l)	Reduction in Conc. of Extractable Metals (Treated vs. Untreated)	Percent Reduction from Prior Treated Extraction
#1 / WET Method	238	11.7	**95%**	NA
#2 / Method 1320	2.5	0.7	72%	**94%**
#3 / Method 1320	0.65	0.03	95%	**96%**
#4 / Method 1320	0.03	0.03	0%	0%
#5 / Method 1320	0.06	0.03	50%	0%
#6 / Method 1320	0.18	0.03	83%	0%
#7 / Method 1320	0.13	0.03	77%	0%
#8 / Method 1320	0.11	0.03	73%	0%
#9 / Method 1320	0.11	0.03	73%	0%
#10 / Method 1320	0.09	0.03	67%	0%

Figure 5 Log Graph of 3-Metal Concentration Using Multiple Extractions

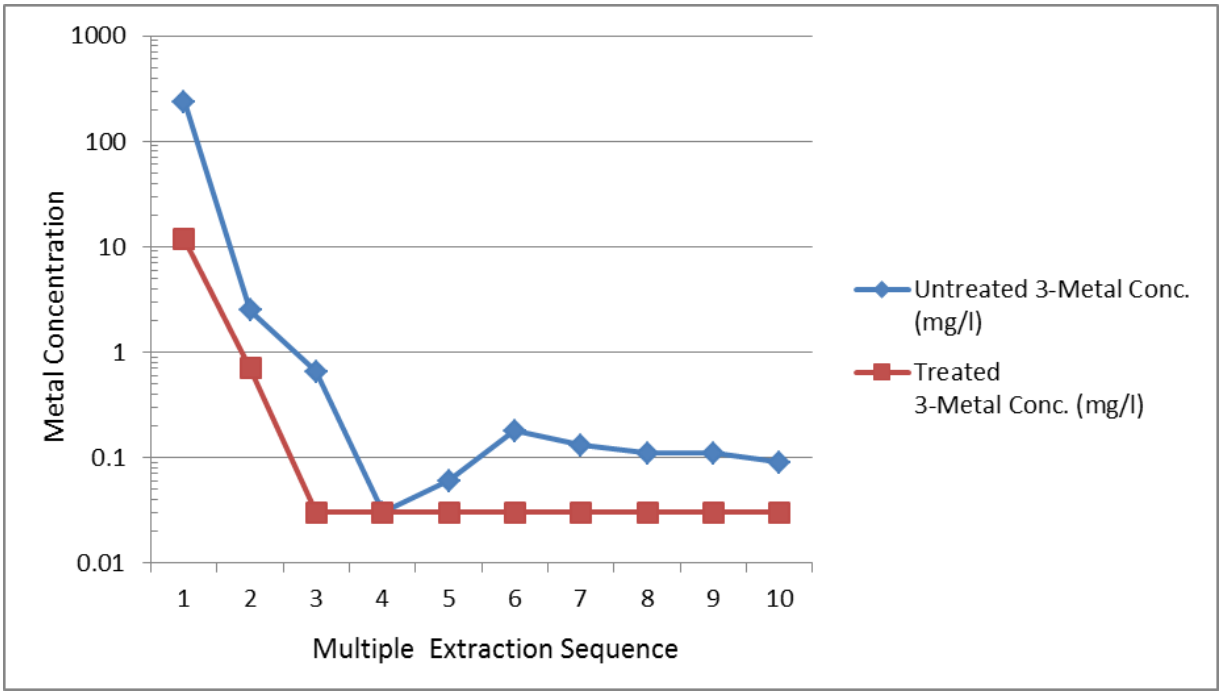

As noted in Table 2, extractable target metals present in the untreated sample were reduced by 95% using polysilicate/cement treatment, as evidenced by the first extraction of treated and untreated samples using the WET method. The comparison of initial WET extractions of untreated and treated samples is also graphically depicted above as extraction #1.

Subsequent extractions by EPA Method 1320 (extractions 2 thru 10 on the graph) showed a decline in extractable metals in the treated sample over the next two extractions (94% and 96%, respectively), then reached the equilibrium extractable value (0.03 mg/l) for the remainder of the extraction tests. The untreated sample required four extractions to reach the same extractable metal concentration observed in the third extraction of the treated sample, and then rebounded to a higher concentration in the remaining extraction tests. This long-term effectiveness study demonstrates that treatment by polysilicate solution and alkaline additive reduces the WET-extractable metals concentration in soils by an average of 95%, and that this treatment benefit is durable enough to withstand multiple extractions (by Method 1320).

It should be noted that the Multiple Extraction Procedure (MEP) is designed to simulate 1,000 years of freeze and thaw cycles and prolonged exposure to an acidic environment (USEPA, 2003). The MEP also gradually removes excess alkalinity from the sampled material, thereby decreasing the pH and ultimately increasing the solubility of most metals. This pH reduction is significant because of the alkaline activator employed in the treatment system and the metals

solubility curves previously discussed, and further validates that the treatment has long-term effectiveness, even in an acidic environment.

Although this study used soil as the treated media, similar long-term effectiveness can be expected in soil-like ASR, as evidenced by the treatability studies and empirical data for treated ASR, which are discussed in the following sections.

A. Historical ASR Treatability Studies

Dr. Trezek has been performing treatability studies on ASR since the late 1980s, and the following tables provide treatability data from his initial work, as well as more recent studies by Dr. Trezek and others.

Historical total (mg/kg) and extractable (mg/l) metal concentrations, as determined by the California WET method, for California shredder facilities are provided in Table 3 below. These data, which are from the 1988-1989 time period, were collected as part of the original ASR treatability studies conducted by Dr. Trezek. These data were generated for the purpose of demonstrating the effectiveness of the polysilicate/cement treatment in substantially reducing the extractability of metals found in ASR. Table 3 features cadmium (Cd), lead (Pb) and zinc (Zn), as these were the primary metals of concern to DTSC.

Table 3
Historical ASR Treatability Data

SAMPLE DATE	SAMPLE TYPE	TYPE OF ANALYSIS	WET results in mg/L Total results in mg/kg		
			Cd	Pb	Zn
3/17/1988	Untreated	WET	2.9	65	950
		Totals	76	2900	14000
	Treated	WET	0.14	39	140
		Totals	35	2800	6500
3/18/1988	Untreated	WET	2.60.	73	780
		Totals	52	2400	12000
	Treated	WET	0.17	16	23
		Totals	37	1800	7400
3/19/1988	Untreated	WET	2.4	93	570
		Totals	56	2400	9800
	Treated	WET	0.26	7.1	12
		Totals	30	1500	5700

Table 3 - Historical ASR Treatability Data (continued)

SAMPLE DATE	SAMPLE TYPE	TYPE OF ANALYSIS	WET results in mg/L Total results in mg/kg		
			Cd	Pb	Zn
3/22/1988	Untreated	WET	1.8	73	530
		Totals	54	3200	11000
	Treated	WET	0.2	19	53
		Totals	50	2800	7900
3/25/1988	Untreated	WET	1.4	48	440
		Totals	20	970	5100
	Treated	WET	0.11	19	110
		Totals	17	1500	4100
3/29/1988	Untreated	WET	1.8	65	67
		Totals	100	1900	8500
	Treated	WET	0.85	19	160
		Totals	90	1900	5900
4/1/1988	Untreated	WET	0.75	34	180
		Totals	26	1000	6500
	Treated	WET	0.48	31	82
		Totals	18	1200	5500
4/5/1988	Untreated	WET	0.45	24	150
		Totals	35	1100	8300
	Treated	WET	0.6	25	140
		Totals	20	650	5100
4/8/1988	Untreated	WET	0.8	31	260
		Totals	29	1300	9000
	Treated	WET	0.25	5.5	12
		Totals	18	1700	7700
4/12/1988	Untreated	WET	0.78	36	240
		Totals	17	660	3100
	Treated	WET	0.05	6.4	7.6
		Totals	22	1200	4600

Table 3 - Historical ASR Treatability Data (continued)

SAMPLE DATE	SAMPLE TYPE	TYPE OF ANALYSIS	WET results in mg/L Total results in mg/kg		
			Cd	Pb	Zn
4/15/1988	Untreated	WET	0.59	25	450
		Totals	20	1000	5700
	Treated	WET	0.03	3.5	12
		Totals	20	650	3800
4/19/1988	Untreated	WET	1.5	30	590
		Totals	21	790	6800
	Treated	WET	0.06	5.8	30
		Totals	25	1000	5700
4/22/1988	Untreated	WET	1.1	47	480
		Totals	35	3900	9400
	Treated	WET	0.3	19	81
		Totals	34	2700	10000
2/15/1989	Untreated	WET	0.95	34.8	463
		Totals	29.9	1750	3710
	Treated	WET	ND	10.0 / 1.81	13.6
		Totals	37.9	3340	7630
2/16/1989	Untreated	WET	1.84	441	629
		Totals	26.5	5200	6870
	Treated	WET	ND	ND	0.16
		Totals	21.2	4260	8330
2/17/1989	Untreated	WET	1.71	28.1	640
		Totals	31.5	1550	7270
	Treated	WET	ND	10.4	21.1
		Totals	35.1	2040	8880
2/21/1989	Untreated	WET	1.77	33.3	766
		Totals	24.9	1470	7070
	Treated	WET	ND	12.6 / 3.15	61.7
		Totals	34.5	2670	10500
2/22/1989	Untreated	WET	1.76	1110	679
		Totals	26.1	22100	11300
	Treated	WET	ND	ND	0.17
		Totals	33.2	7830	8780

SAMPLE DATE	SAMPLE TYPE	TYPE OF ANALYSIS	WET results in mg/L Total results in mg/kg		
			Cd	Pb	Zn
2/23/1989	Untreated	WET	2.25	44.30	717.00
		Totals	42.5	2270	5170
	Treated	WET	ND	20.9 / ND	22.0
		Totals	24.6	3770	7680
2/24/1989	Untreated	WET	1.68	71.1	635
		Totals	28.3	1980	8650
	Treated	WET	ND	0.73	0.16
		Totals	28.9	7080	9980
Mean Values	Untreated	WET	1.49	120	511
		Totals	37.5	2992	7962
	Treated	WET	0.19	12.5	49.1
		Totals	31.6	2620	7084
Treatment Reduction (as % of Untreated Conc.)		WET	**87.0%**	**89.6%**	**90.4%**

N.D. = non-detect, or concentration less than lab reporting limit.

As noted by the bold figures at the bottom of Table 3 above, treatment efficiency for extractable cadmium, lead and zinc averaged between 87% and 90%.

Similar reductions were achieved for the four other metals that were evaluated (Cr, Cu, Hg and Ni). The average treatment reduction of extractable (WET) nickel was similar to the ratios expressed above for cadmium, lead and zinc. Extractable chromium and mercury values for untreated samples were too low to generate comparable reduction data in the treated samples. The fourth metal, copper, showed a slight increase in extractability with treatment, although all samples, both treated and untreated, were well below the STLC (25 mg/l).

B. Recent ASR Treatability Studies

More recent treatability studies have been conducted to evaluate the effectiveness of ASR treatment. Results of one such study are presented in the Table 4 and involve ASR conveyor belt samples collected before and after treatment.

Table 4

Recent Treatability Study Using Belt-Collected ASR Samples

Sample Date	Sample Type	Type of Analysis	Parameter		
			Cd (mg/L)	Pb (mg/L)	Zn (mg/L)
4/23/2009	Untreated	WET	0.776	73.8	1170
4/23/2009	Treated	WET	0.239	2.47	186
4/23/2009	Untreated	WET	0.228	42.6	1050
4/23/2009	Treated	WET	0.14	3.20	78.2
4/23/2009	Untreated	WET	0.931	28.1	1420
4/23/2009	Treated	WET	0.102	7.33	73.4
Mean Values	Untreated	WET	0.645	48.17	1213
	Treated	WET	0.160	4.33	113
Treatment Reduction (as % of Untreated Conc.)		WET	**75%**	**91%**	**91%**

Note: Samples were collected from ASR conveyor belt, before and after treatment, with pairs sampled approximately 5 minutes apart to allow for average pug mill treatment dwell time.

In addition to treatment studies involving one formulation of treatment chemicals, there is ongoing activity within the auto shredding industry to advance the efficacy of ASR treatment through formula modifications. This typically involves a collaborative effort between the manufacturer of the chemicals and the auto shredder.

Collaborative treatability studies between the chemical manufacturer and the auto shredder often involve applying various treatment protocols to bench scale samples. For example, 150 gram quantities of ASR taken from a 10,000 gram composite stockpile are common. The testing involves the application of various types and quantities of silicate blends and alkaline activators. Although each manufacturer claims to have a proprietary blend, the basic components are either potassium silicate or sodium silicate, combined with other additives such as phosphates and wetting agents. The original Lopat K20 blend that was developed in the 1980s contained three different viscosity potassium silicates, with borax and glycerin as additives. Thus, the goal has been to develop blends that provide the maximum effectiveness while minimizing the use of Portland cement or other alkaline activators.

During the past several years, one chemical manufacturer and a California auto shredder facility have collaborated to conduct a variety of ASR treatability studies concentrating on the target metals of cadmium, lead, copper, and zinc. The testing generally involved: (1) treating ASR with reformulated silicate blends (usually with sixteen aliquots and three or four alkaline activators), (2) measuring the metal concentrations in an accredited laboratory, and (3) selecting the most

promising combination for further evaluation. More than thirty different blends were evaluated using these basic parameters. A summary of these treatability results for varying polysilicate blends is provided in Table 5 below.

Table 5
Comparison of Treatment Formulations
(WET results, mg/L)

Formula	Date	Sample #	Cd	Pb	Zn	Cu	Application Sequence
NMET	8/3/2009	1	ND	5.23	19.6	19.2	1nmet,10L
	8/3/2009	3	0.094	7.63	21.2	6.14	1nmet,7C
	8/3/2009	5	0.079	16.3	25.6	17.9	2nmet,10L
	8/3/2009	6	0.332	7.21	118	20.1	2nmet,7l
NMET2&W	11/12/2009	9	0.252	31.2	221	21.7	1nmet2,50w,10L
	11/12/2009	10	0.12	25.8	75.2	**30.5**	1nmet2,50w,7L
NMET3&W	11/12/2009	14	0.119	14.7	87.5	**36.4**	1nmet3,50W,7L
	11/12/2009	16	0.12	15.3	93.8	**36.2**	1nmet3,50W,5L
NMET3GS	2/18/2010	5	ND	19.9	90.7	**36.6**	nmetgs,10L
NMET4	2/18/2010	9	ND	22.4	113	**25.1**	nmet4,10L
NMETG	8/3/2009	9	ND	17.1	91.1	24.6	1nmeg,10L
	8/3/2009	13	0.051	12.9	55.8	20.1	2nmetg,10L
NMETNK	8/14/2000	1	ND	26.7	47.8	**27.7**	1nmetnk,10L
	8/14/2009	5	0.407	2.74	208	4.96	2nmetnk,10L
NMETNKG	8/14/2009	9	ND	9.71	47.3	**27.4**	1nmet-,10L
	8/14/2009	13	ND	21.6	44.5	22.6	2nmet-10L
MET535G	8/21/2009	5	ND	67.6	187	22.3	met535g,10L
	8/21/2009	9	0.147	21.1	142	0.53	2met535g,10L
MET540	8/21/2009	13	0.116	7.24	65.1	0.622	1met540,10L
KMET	7/28/2009	13	0.212	14.7	124	15.8	1kmet,10L
	7/28/2009	9	0.188	14.2	139	**26.8**	2kmet,10L
	7/14/2009	1	0.075	4.19	25.8	2.51	2kmet,10L
	7/14/2009	3	0.333	1.59	105	1.88	2kmet,10C
	7/14/2009	8	ND	3.61	24.3	0.18	2kmet,10L
KMET&TRIA	10/26/2009	8	0.398	19.4	125	21.1	kmet,tria,7L
K90	7/14/2009	4	0.083	6.15	39.1	13	2k90,10L
	7/14/2009	7	ND	7.54	40.9	0.273	1,k90,10L
	7/14/2009	6	0.795	1.57	**283**	1.36	2k90,10C
	7/28/2009	5	0.147	16.3	153	**29.4**	1k90,10L
	7/28/2009	1	0.276	11.2	109	2.6	2k90,10L
K90&N	7/14/2009	9	0.092	17.6	67	12.4	1k90,2n,10L
	7/14/2009	10	0.27	1.18	**268**	0.785	1k90,2n,10C
N1	7/9/2009	5nd	ND	10.6	89.7	1.06	1,2n1,10L
	7/9/2009	6	0.06	18.1	82.2	22.1	0,2n1,10L
	6/18/2009	7	ND	1.47	141	0.08	1,2n1,10L
	6/18/2009	4	ND	0.447	**286**	ND	2,1n1,10L
	7/21/2009	4	0.071	6.58	28.4	2.72	1n1,10L

Table 5
Comparison of Treatment Formulations
(WET results, mg/L)

Formula	Date	Sample #	Cd	Pb	Zn	Cu	Application Sequence
N1&TRI	10/26/2009	1	0.234	4.09	73.7	2.57	1n1,1tr1,7L
N1A	5/19/2010	4	ND	49.5	51.5	20.4	n1a,10L
N1B	5/19/2010	8	0.112	26.9	34.9	22.3	n1b,10L
N1C	5/19/2010	12	ND	10.8	48.2	5.67	n1c,10L
N1D	5/19/2010	16	0.247	17.1	57.9	**26.5**	n1d,10L
MCX90N	8/21/2009	1	0.181	15.5	143	0.988	1mcx90n,10L
MCX90CS	2/9/2010	1	0.412	2.16	206	4.46	mcx90,10L
	2/9/2010	5	0.266	4.26	75.1	5.96	2mcx90,10L
MCX90CH	10/26/2010	4	0.317	16.4	109	56.8	mcx90,10L
MCX90N2B	2/18/2010	1	0.143	5.59	50.3	3.88	mcx90n2b,10L
MCX90N1&	1/25/2011	8	0.314	3.47	119	2.39	mcx90n1,10L
MCX90N1&M	4/28/2011	8	ND	0.119	168	0.169	mcx90n1,10M,5L
	4/28/2011	9	ND	0.844	157	0.806	mcx90n1,10M,5C
MCX90N1&MTT	8/23/2011	2	0.256	7.44	109	4.64	mcx90n1,1mtt,7L
	8/23/2011	4	0.159	2.91	112	3.12	mcx90n1,1mtt,10L
	9/14/2011	4	0.288	4.18	99.4	2.75	mcx90n1,1mtt,10L
MCX90N1&MFT	8/23/2011	6	ND	0.539	130	0.475	mcx90n1,1mft,7L
	9/14/2011	8	ND	5.54	53.6	1.54	mcx90n1,1mft,10L
MCX90N1&LTT	8/23/2011	10	ND	3.83	40.7	1.89	mcx90n1,10ltt,7L
	8/23/2011	12	ND	2.15	12.8	1.44	mcx90n1,10ltt,10L
	9/14/2011	12	ND	5.22	43.2	4.2	mcx90n1,10ltt,10L
PREA	10/20/2009	8	0.195	8.37	158	2.69	1.5prea,10L
RG	7/21/2009	5	0.166	12.9	134	22.9	2rg,10L
RGK	7/21/2009	6	0.7	4.5	41.9	2.17	2rgk,10L
RGS	7/21/2009	7	0.74	9.05	58.6	3.74	2rgs,10L
Ka,Kb	7/21/2009	1	0.071	8.12	43.6	2.65	1ka,1kb,10L
	7/21/2009	2	0.374	2.91	122	1.71	1ka,1kb,10C
	7/21/2009	3	**1.1**	1.98	246	1.5	1ka,1kb,10C/L
RUOH	9/9/2009	5	0.221	13.2	156	8.32	1ruoh,10L
	10/20/2009	12	0.236	15.2	248	4.11	1ruoh,10L
K20A,K20B	11/12/2009	1	ND	24.6	132	**36.9**	1a,b,10L
K20A,K20B&W	11/12/2009	5	0.147	**112**	173	**42.9**	1a,b,25w,10L
	11/12/2009	6	0.215	39.7	92.6	**35.9**	1a,b,25w,7L
K20A&TSUL	11/4/2099	6	0.9	9.19	220	10.4	10k,28t,10L
125A&B	7/21/2010	10	0.329	3.4	156	**40.3**	2,125ab,7L
	7/21/2010	12	ND	2.68	31.2	**34.1**	2,125ab,10L
STLC Values (from CCR, Title 22 Ch. 11, § 66261.24)			**1**	**50***	**250**	**25**	

*Key to table: ND=no detection, below reporting limit. . **Bold text** represents results in excess of the STLC. For ASR, the de facto STLC for lead is 50 mg/l, as per the DTSC reclassification letters. The requirements of the reclassification letters vary with respect to other Title 22 metals.*

VII. Treated ASR – Characterization Data Required By Landfills

The following section discusses landfill characterization data for treated ASR using either the standard or a modified WET method. Under the modified WET method, landfill leachate from the specific landfill that is receiving treated ASR is used as the extraction solution in lieu of the citrate buffer. For some landfills, the Waste Discharge Requirements may specify use of deionized water as the extraction solution.

A. Landfill Leachate Test Data

A summary of treated ASR results using landfill leachate (from Potrero Hills) as the extraction medium is provided in the following table.

Table 6
Summary of Landfill Leachate Testing of Treated ASR

SAMPLE DATE	Parameter							
	Cd (mg/L)	Cr (mg/L)	Cu (mg/L)	Pb (mg/L)	Hg (mg/L)	Ni (mg/L)	Zn (mg/L)	Cr VI (mg/L)
1/20/2009	< 0.05	< 0.050	0.45	< 0.100	< 0.005	0.20	0.18	< 0.020
4/3/2009	< 0.050	< 0.050	0.06	< 0.100	< 0.005	0.236	0.275	< 0.020
7/7/2009	< 0.050	< 0.050	< 0.05	< 0.100	< 0.005	0.123	0.201	< 0.020
10/15/2009	< 0.050	< 0.100	0.165	< 0.100	< 0.100	0.142	0.351	< 0.100
1/18/2010	< 0.020	< 0.100	1.2	< 0.100	< 0.100	0.217	< 0.100	< 0.100
4/8/2010	< 0.020	< 0.100	1.25	< 0.100	< 0.005	0.147	< 0.100	< 0.020

Note: purple cells represent results below laboratory reporting limit (N.D.).

In contrast to the results from standard WET method analysis, solubility testing conducted with landfill leachate (which is representative of actual conditions in the landfill, as opposed to the WET) shows little to no leachable heavy metals in the treated ASR.

C. Treated ASR Characterization Data (Total and WET)

Table 7 presents Total and extractable data gathered between January 2009 and January 2012 as part of routine characterization testing of treated ASR conducted by California auto shredders. Many of these analyses were required by the reclassification letters issued to certain of the shredder facilities and/or by the Waste Discharge Requirements or other permits for certain landfills that accept treated ASR for use as alternative daily cover. In some cases, WET data is required to be submitted to the landfills on a quarterly basis, as part of existing alternative daily cover acceptance agreements between the landfills and the individual auto shredders.

Table 7 - Total and WET Results for Treated ASR

SAMPLE DATE	Total							WET						
	Cd (mg/kg)	Cr (mg/kg)	Cu (mg/kg)	Pb (mg/kg)	Hg (mg/kg)	Ni (mg/kg)	Zn (mg/kg)	Cd (mg/L)	Cr (mg/L)	Cu (mg/L)	Pb (mg/L)	Hg (mg/L)	Ni (mg/L)	Zn (mg/L)
1/7/2009	-	-	-	690	-	-	-	-	-	-	35	-	-	-
1/16/2009	< 0.5	408	**4390**	835	0.890	< 2.5	**9950**	< 0.1	1.03	6.12	6.27	< 0.02	0.625	144
1/16/2009	16	110	**37000**	1000	0.89	150	**11000**	0.11	0.84	9.8	1.4	0.0017	0.96	22
1/16/2009	< 0.5	56.2	**5350**	**1110**	1.02	< 2.5	**15000**	< 0.1	0.669	9.91	4.70	< 0.02	0.565	34.7
4/10/2009	19.4	77.9	807	**1040**	2.48	184	**11100**	0.073	0.688	6.04	2.17	< 0.02	0.589	31.3
4/11/2009	12.7	103	1010	991	1.64	145	**9140**	0.109	0.816	7.92	6.96	< 0.02	0.680	94.1
5/26/2009	< 0.5	84.7	**16300**	**3340**	0.991	258	**11500**	< 0.1	0.948	10.6	10.4	< 0.01	0.638	48.9
7/2/2009	-	-	-	150	-	-	-	-	-	-	22.0	-	-	-
7/2/2009	-	-	-	910	-	-	-	-	-	-	**51.0**	-	-	-
7/10/2009	65.4	83.9	**16300**	**1360**	0.300	< 2.5	**10500**	< 0.1	1.13	7.76	7.08	< 0.01	0.593	52.0
7/17/2009	183	217	**10800**	**1420**	1.23	305	**15100**	0.313	1.15	16.6	3.49	< 0.01	0.860	94.5
7/18/2009	58.2	100	333	**1010**	0.823	< 2.5	**8980**	< 0.1	0.889	4.30	4.63	< 0.02	0.758	154
10/2/2009	< 0.5	137	2150	**1400**	0.499	390	**11700**	< 0.1	1.10	12.1	6.17	< 0.02	< 0.3	38.8
10/9/2009	< 0.5	150	**3520**	**1060**	1.07	286	**8720**	0.085	1.00	5.87	6.11	< 0.01	< 0.3	32.0
10/10/2009	< 0.5	81.5	707	**1020**	0.647	< 2.5	**11170**	0.038	0.841	7.26	3.99	< 0.02	< 0.3	32.6
2/1/2010	-	-	-	**1284**	-	-	-	-	-	-	39.16	-	-	-
2/1/2010	-	-	-	901	-	-	-	-	-	-	4.86	-	-	-
2/1/2010	-	-	-	**2577**	-	-	-	-	-	-	47.24	-	-	-
2/3/2010	< 0.5	136	2100	**1810**	2.60	< 2.5	**9540**	0.358	1.84	8.42	2.64	< 0.01	1.17	123
2/5/2010	< 0.5	113	1920	785	8.15	< 2.5	**9140**	< 0.1	1.62	8.04	14.3	< 0.02	< 0.3	58.2
2/6/2010	< 0.5	121	**17600**	843	2.42	< 2.5	**6470**	0.152	1.30	12.4	1.37	< 0.01	0.846	38.2
4/9/2010	< 0.5	118	976	**1160**	1.65	< 2.5	**10900**	0.372	1.08	5.59	5.13	< 0.02	0.947	198
4/10/2010	< 0.5	196	**3440**	**1440**	2.45	311	**14300**	0.075	0.769	10.9	6.93	< 0.02	1.09	46.5
4/12/2010	< 0.5	114	**17100**	**1330**	0.581	< 2.5	**10600**	0.121	0.725	8.76	1.43	< 0.01	0.646	22.1
7/7/2010	< 0.5	173	**7300**	**6450**	1.15	269	**16400**	0.065	0.976	23.7	6.64	< 0.01	0.563	28.7
7/10/2010	< 0.5	154	**20400**	830	1.67	< 2.5	**9180**	< 0.050	0.843	6.71	1.13	< 0.01	0.751	11.0
7/16/2010	10.1	160	**8610**	681	1.27	337	**8000**	0.659	1.54	1.43	3.97	< 0.01	1.97	233
7/26/2010	-	-	-	**2600**	-	-	-	-	-	-	3.20	-	-	-
7/26/2010	-	-	-	740	-	-	-	-	-	-	4.30	-	-	-
7/26/2010	-	-	-	700	-	-	-	-	-	-	5.60	-	-	-

Table 7 - Total and WET Results for Treated ASR

SAMPLE DATE	Total							WET						
	Cd (mg/kg)	Cr (mg/kg)	Cu (mg/kg)	Pb (mg/kg)	Hg (mg/kg)	Ni (mg/kg)	Zn (mg/kg)	Cd (mg/L)	Cr (mg/L)	Cu (mg/L)	Pb (mg/L)	Hg (mg/L)	Ni (mg/L)	Zn (mg/L)
10/9/2010	18.9	82.3	**2740**	879	0.558	141	**8570**	0.233	1.33	7.21	2.64	< 0.01	0.839	45.6
10/9/2010	10.6	62.9	870	469	1.49	122	**5430**	< 0.1	0.697	8.49	1.17	< 0.01	0.742	5.62
10/21/2010	20.6	68.5	**3260**	997	1.24	182	**11900**	< 0.1	0.756	11.6	2.10	< 0.01	0.605	12.7
1/7/2011	7.12	84.8	240	400	0.702	92.8	**6300**	< 0.1	0.902	4.18	1.41	< 0.01	0.496	11.3
1/7/2011	21.7	88.0	2040	854	0.312	159	**9530**	0.056	1.13	14.4	2.11	< 0.02	0.575	8.59
1/8/2011	15.2	86.9	2190	742	0.617	159	**7730**	< 0.1	0.900	4.40	0.637	< 0.01	0.534	4.30
1/12/2011	-	-	-	630	-	-	-	-	-	-	11.0	-	-	-
1/12/2011	-	-	-	360	-	-	-	-	-	-	4.10	-	-	-
1/12/2011	-	-	-	360	-	-	-	-	-	-	28.0	-	-	-
4/9/2011	15.5	132	**7030**	731	1.11	108	**7750**	< 0.1	0.719	4.09	2.27	< 0.02	0.467	16.1
4/9/2011	16.0	104	1290	**1150**	1.55	188	**8380**	0.190	1.31	4.63	2.07	< 0.01	0.758	111
4/15/2011	50.3	91.4	412	957	0.578	138	**7650**	0.097	0.758	13.0	6.46	< 0.02	0.775	118
7/6/2011	-	-	-	1000	-	-	-	-	-	-	< 0.25	-	-	-
7/6/2011	-	-	-	1000	-	-	-	-	-	-	0.48	-	-	-
7/6/2011	-	-	-	**1100**	-	-	-	-	-	-	2.00	-	-	-
7/9/2011	7.72	496	**5670**	433	0.966	135	3630	< 0.1	0.606	7.57	1.58	< 0.01	0.554	7.29
7/15/2011	18.4	76.4	**17000**	**1400**	0.768	145	**8190**	< 0.1	1.00	6.47	1.30	< 0.02	0.435	3.97
7/23/2011	15.5	67.9	**6810**	711	1.25	153	**9370**	< 0.1	0.622	6.63	4.32	< 0.01	0.567	22.6
10/5/2011	7.88	41.7	750	449	0.252	51.3	3310	0.086	0.934	12.8	0.753	< 0.02	0.390	7.22
10/7/2011	8.33	43.3	368	665	0.474	140	**6090**	0.038	0.631	6.25	6.01	< 0.01	5.24	31.4
10/8/2011	12.7	66.2	**14800**	877	0.794	429	**9090**	< 0.1	0.821	5.18	1.07	< 0.01	0.514	6.15
1/20/2012	-	-	-	970	-	-	-	-	-	-	0.81	-	-	-
1/20/2012	-	-	-	**1100**	-	-	-	-	-	-	6.20	-	-	-
1/20/2012	-	-	-	920	-	-	-	-	-	-	0.54	-	-	-
# in Data Set	36	36	36	54	36	36	36	36	36	36	54	36	36	36
90% UCL Value	27.0	142.2	**8966**	**1499**	1.56	185	**10114**	0.137	1.035	9.55	12.2	< 0.02	1.22	69.2
TTLC / STLC	100	2500	2500	1000	20	2000	5000	1	*5 / 560	25	50	0.2	20	250

Notes: USEPA ProUCL Software Version 4.1.01 was used to calculate 90% UCL values. Non-detect values were included in UCL data sets, and distribution model recommended by program for 95% UCL was used for each set. The results shown in the purple cells are below the lab reporting limit. **Bold** values are in excess of standards.

* The STLC standard for Cr VI is 5 mg/l, whereas the Total or Cr III STLC for samples passing the TCLP test is 560 mg/l. NA=not applicable, highest ND value used instead.

The preceding Table 7 of total and WET Results for Treated ASR includes a minimum of 36 sample sets, for seven Total and WET-extractable metals, collected over a 3-year period. Eighteen additional Total and WET-extractable lead-only results from a California shredder during the same period were also included in the data set.

USEPA's ProUCL Software Version 4.1.01 was utilized to calculate the 90% Upper Confidence Limits (90% UCLs) for each metal in the sample data set (USEPA, 2011b). This statistical value is intended to represent the upper limit (with 90% confidence) of the true mean of any randomly drawn subsets of the data. Comparison of total concentrations of metals in the untreated ASR with extractable concentrations in the treated material clearly demonstrates the effectiveness of the ASR treatment process.

VIII. CONCLUSIONS

This report has been prepared at the request of the California Chapter of the Institute of Scrap Recycling Industries (ISRI) to objectively evaluate whether the auto shredder residue (ASR) treatment process currently employed at three California shredders effectively reduces the amount of extractable metals in ASR, such that treated ASR is suitable for disposal or beneficial use as Alternative Daily Cover in nonhazardous waste landfills. The ASR treatment process involves the use of soluble silicates in an aqueous solution, in combination with dry cement or another alkaline activator, which alters the chemical characteristics of leachable heavy metals in the ASR matrix. This treatment technology is known to the USEPA as *Stabilization*, and has been studied and shown to be effective on a wide range of constituents including heavy metals (USEPA, 2009).

Treatability studies by Dr. Trezek and others on the specific use of this technology for treatment of ASR began in the early 1980s, and concluded that the extractability of lead, cadmium, zinc and other heavy metals can be reduced by 90% to 99% with the use of this technology. These treatability study findings were submitted to DTSC and, on that basis, DTSC determined that treated ASR was eligible for reclassification on the grounds that it possesses mitigating physical and chemical characteristics that render it insignificant as a hazard to human health and the environment. The current review demonstrates that the earlier reclassification decision continues to be supported by analytical data related to the extractability of heavy metals (primarily lead, cadmium and zinc) in the waste before and after treatment.

IX. REFERENCES

C.C.I., a Chemical Corporation, of Vernon, California, (2011). Corporate information downloaded from home page available at: http://www.ccichemical.com/

CEMEX, Material Safety Data Sheet (MSDS) for Portland cement, (2011). Downloaded from http://wstabilization.com/download/files/Cemex%20%20MSDS.pdf

Cullinane, M.J.; Jones, L.W.; Malone, P.G.; (1986). *Handbook for the Stabilization/Solidification of Hazardous Waste*, USEPA, document EPA/540/2-86/001, Table 2-2.

Davis, E.L.; Krumrine, P.H.; Boyce, J.S.; Falcone, J.S.; (1986). *Mechanisms for the Fixation of Heavy Metals in Solidified Wastes Using Soluble Silicates*; PQ® Corporation, presented at the HWHM '86 Conference in Atlanta, Georgia.

DeGaspari, John. (1999). "From trash to cash: A new process reclaims former unrecoverables in the residue of scrapped vehicles." *Mechanical Engineering Magazine Online* http://www.memagazine.org/backissues/membersonly/june99/features/trash/trash.html.

Envirokem, (2008). Product Bulletin for Metbond MCX-90, document #TBR-90-1, undated but issued to shredder facility on 12-1-2008.

Hook, Brian R. (2008). "Auto shredder residue recycling researched." AmericanRecycler.com, http://www.americanrecycler.com/1008/auto.shtml.

Institute of Scrap Recycling Industries (ISRI), (2011). "The Scrap Recycling Industry: Ferrous Scrap" factsheet.

Interstate Technology and Regulatory Cooperation (ITRC) Working Group, (1997). "Emerging Technologies for the Remediation of Metals in Soils; in situ Stabilization/in place Inactivation".

Krofchak, D, (1979). "Solidification of Wastes", Chapter 17, Toxic and Hazardous Waste Disposal, Vol. 1, Ann Arbor Science.

Metal Bulletin Daily, (2008). "(AMM) VRP Research Narrowing the auto recycling gap," Issue 96, 1/1/2008.

PQ® Corporation, (2011). *Waste Treatment* webpage, available at http://www.pqcorp.com/pc/NorthAmerica/Markets/WasteTreatment.aspx.

Trezek, G.J., (1994). *Remediation of Heavy Metal Contaminated Solids Using Polysilicates*, Chapter 20, of Process Engineering for Pollution Control and Waste Minimization, edited by Wise, D.L. and Trantolo, D.J., Marcel Dekker, Inc., New York, NY.

USEPA, (1980). *Guide to the Disposal of Chemically Stabilized and Solidified Waste* (SW-872, NTIS: PB87-154 902).

USEPA, (1986). SW846 Method 1320, Multiple Extraction Procedure, Revision 0.

USEPA, (2003). *Guide for Industrial Waste Management*, EPA/530/R-03/001.

USEPA, (2006). *In Situ Treatment Technologies for Contaminated Soil*, Engineering Forum Issue Paper, document EPA/542/F-06/013.

USEPA, (2008). *Overview of Portland Cement and Concrete*, Appendix A of Study on Increasing the Usage of Recovered Mineral Components in Federally Funded Projects Involving Procurement of Cement or Concrete …Report to Congress. Document EPA530-R-08-007, download at http://www.epa.gov/wastes/conserve/tools/cpg/pdf/rtc/report4-08.pdf

USEPA, (2009) *Technology Performance Review: Selecting and Using Solidification/ Stabilization Treatment for Site Remediation*, document EPA/600/R-09/148.

USEPA, (2011a). *Materials Characterization Paper In Support of the Final Rulemaking: Identification of Nonhazardous Secondary Materials That Are Solid Waste - Auto Shredder Residue*, EPA-HQ-RCRA-2008-0329-18.

USEPA, (2011b). ProUCL Version 4.1.01 Software, Technical Support Center for Monitoring and Site Characterization webpage, download at http://www.epa.gov/osp/hstl/tsc/software.htm.