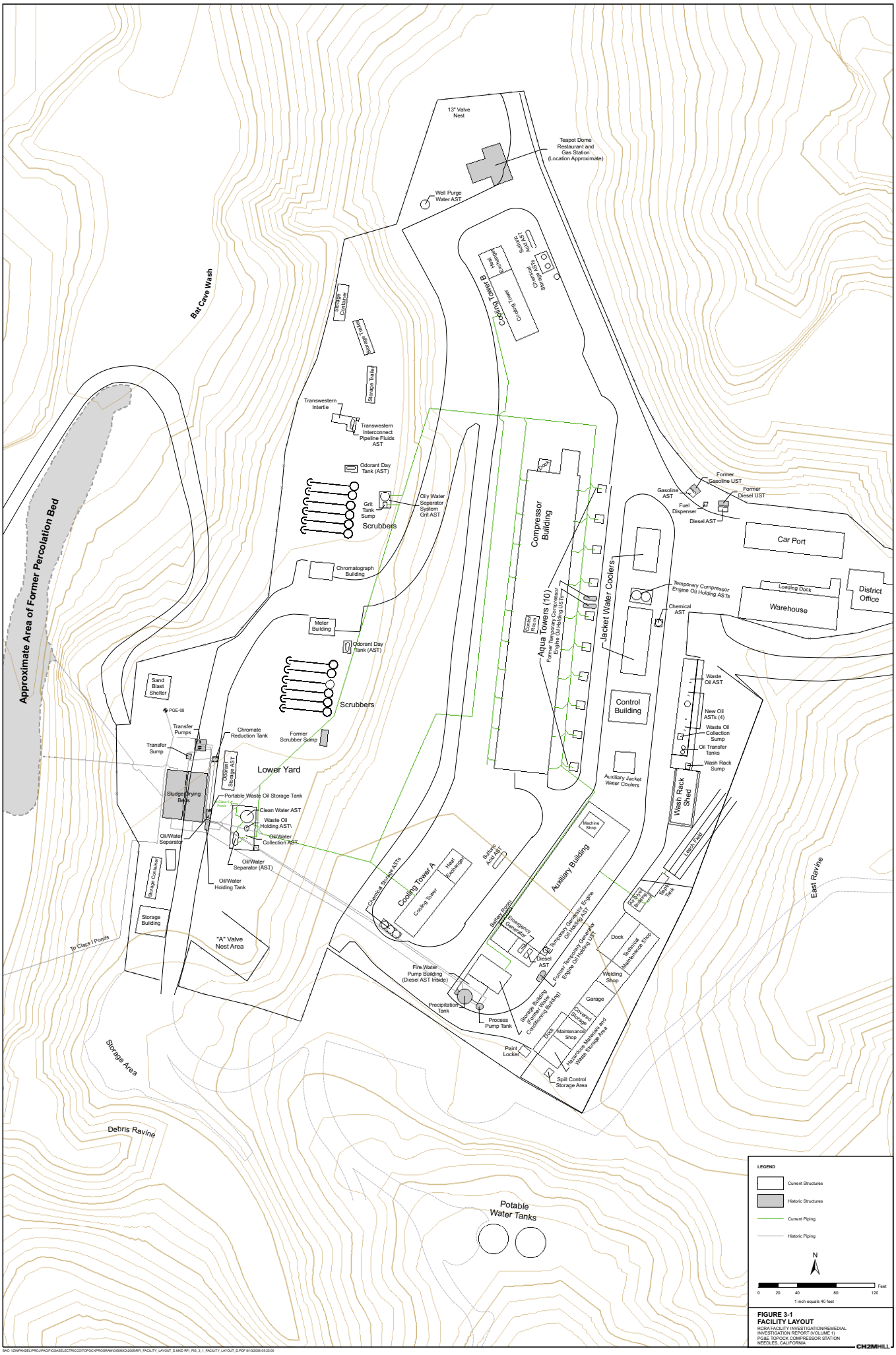

FIGURE 3-1
FACILITY LAYOUT
RCRA FACILITY INVESTIGATION/REMEDIAL INVESTIGATION REPORT (VOLUME 1)
PG&E TOPOCK COMPRESSOR STATION
NEEDLES, CALIFORNIA

CH2MHILL

BAD \\ZINFANDEL\PROJ\PACIFICGAS\ELECTRIC\COTOPOC\PROGRAM\GIS\MXD\2006\RFI_FACILITY_LAYOUT_D.MXD RFI_FIG_3_1_FACILITY_LAYOUT_D.PDF 8/10/2006 09:25:00

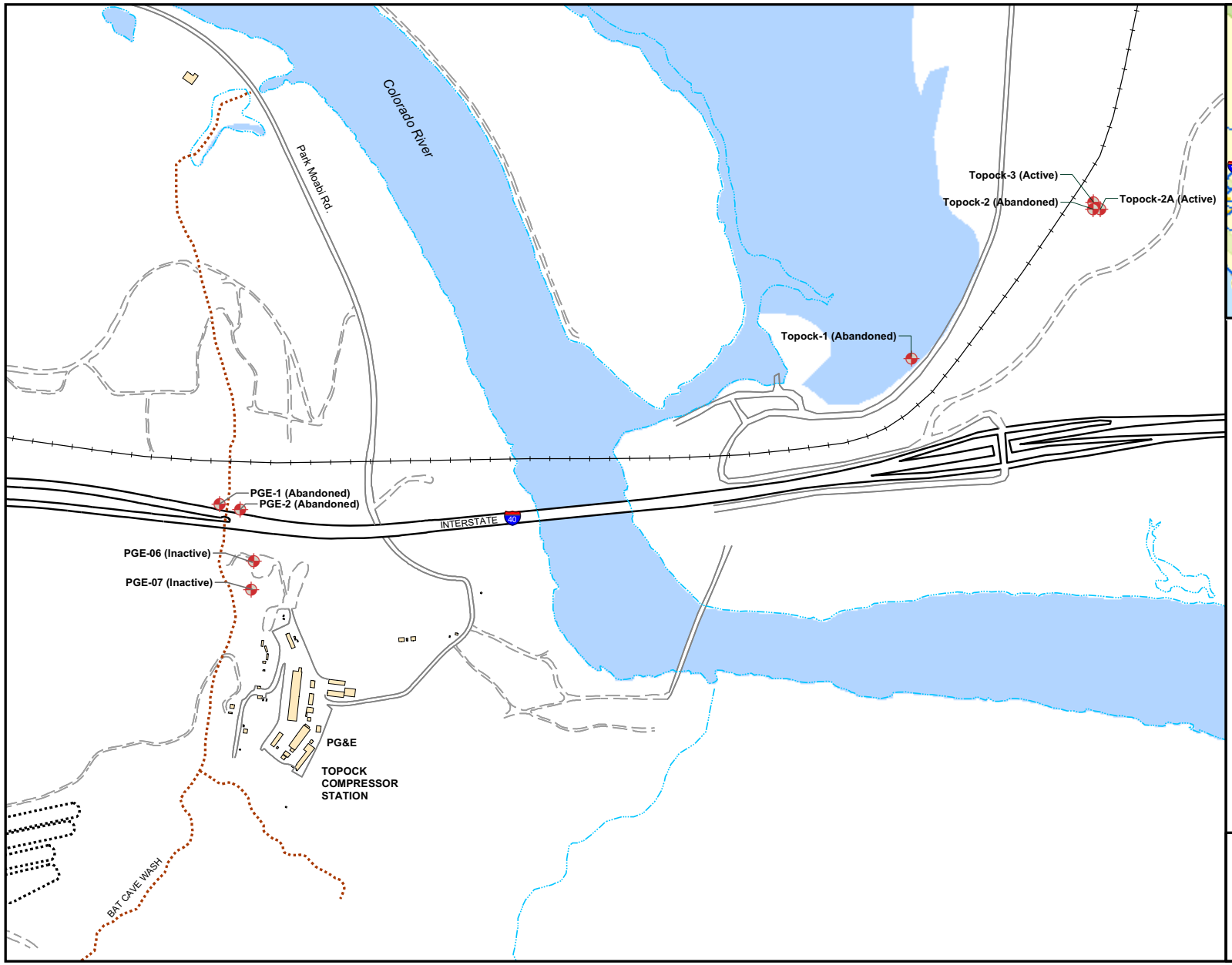

Legend

- Production Well
- Stream
- Ravine
- Gravel Road / Area
- Paved Road
- Water
- Building

Notes:

Wells PGE-1 and PGE-2 abandoned in 1964-1965

Wells Topock-1 and Topock-2 began usage in 1961, abandoned in 1980

Well Topock-2A replaced Topock-2 in 1980

Well Topock-3 installed in 1974

Wells Topock-2A and Topock-3 are City of Needles Wells and supply water to facility

N

0 300 600 1,200 Feet

1 inch equals 600 feet

California State Plane Coordinate System
NAD 83 Zone 5 US. Feet.

FIGURE 3-2
LOCATION OF WATER SUPPLY TOPOCK COMPRESSOR STATION WELLS

RCRA FACILITY INVESTIGATION/REMEDIAL INVESTIGATION REPORT (VOLUME 1)
PG&E TOPOCK COMPRESSOR STATION
NEEDLES, CALIFORNIA

CH2MHILL

BAO \\ZINFANDEL\PROJ\PACIFICGASELECTRICCO\TOPOCKPROGRAM\GIS\MXD\2006\RFI_LOCATION_OF_WATER_PRODUCTION_WELLS.MXD RFI_FIG_3_2_LOCATION_OF_WATER_PRODUCTION_WELLS.PDF 8/14/2006 15:31:00

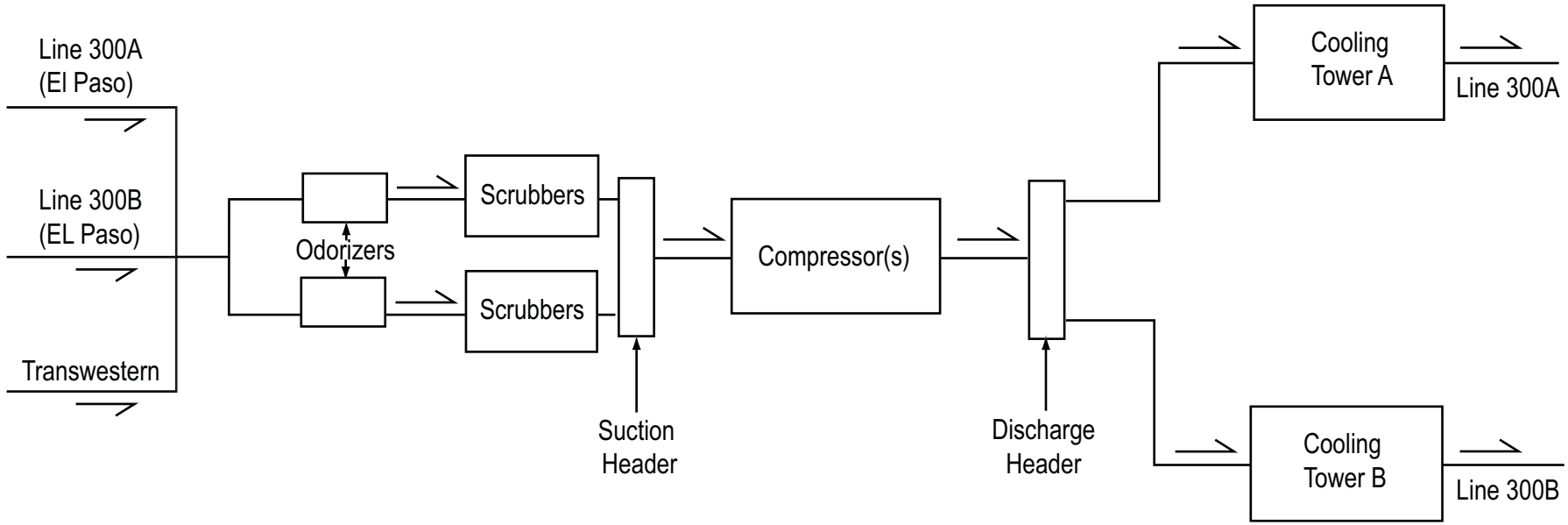

Legend:
Natural Gas Flow Direction

FIGURE 3-3
SCHEMATIC OF NATURAL GAS FLOW THROUGH COMPRESSOR STATION
RCRA FACILITY INVESTIGATION/REMEDIAL INVESTIGATION REPORT (VOLUME 1)
PG&E TOPOCK COMPRESSOR STATION
NEEDLES, CALIFORNIA

CH2MHILL

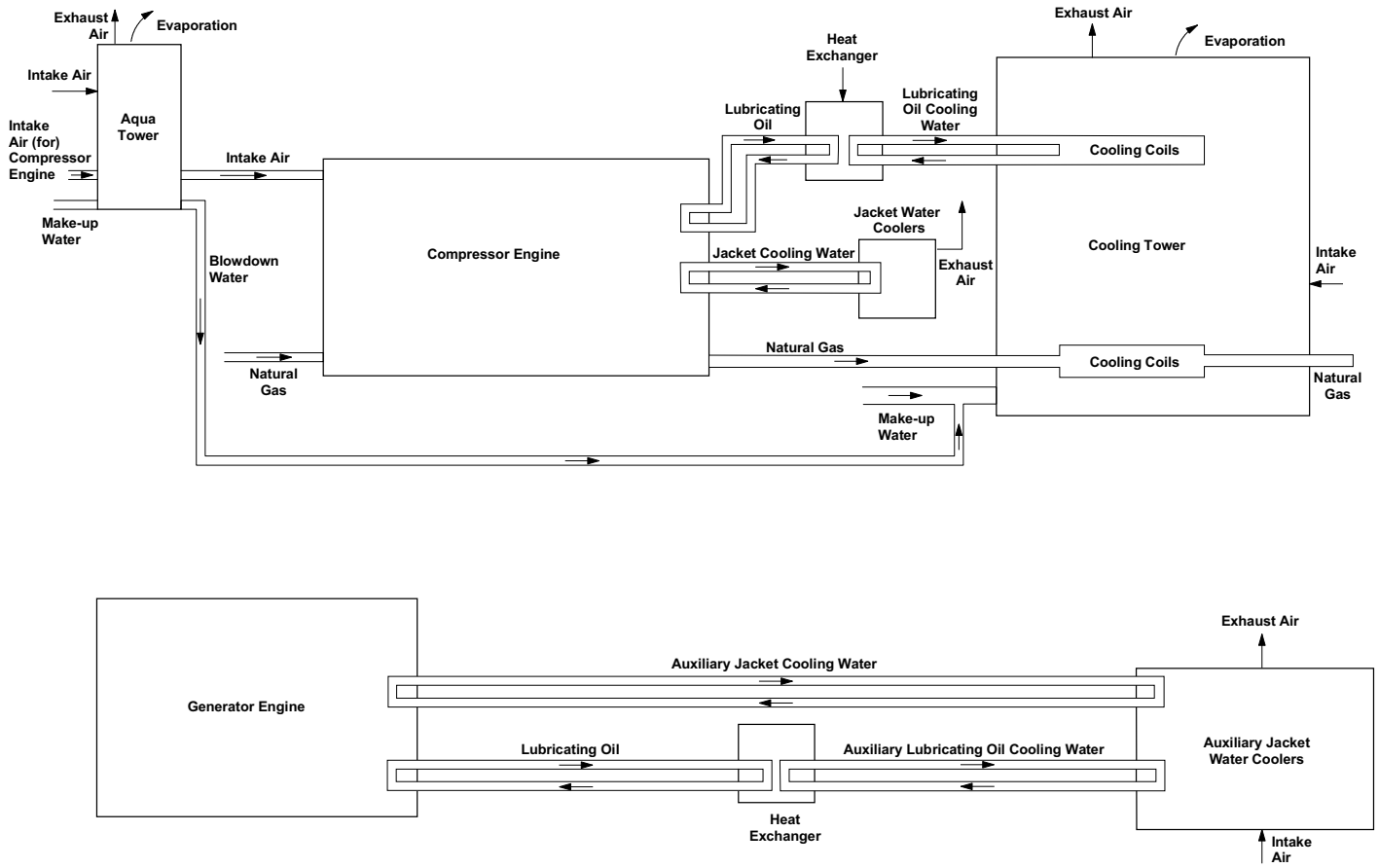

LEGEND

Flow Direction

FIGURE 3-4
SCHEMATIC OF COOLING WATER SYSTEMS
RCRA FACILITY INVESTIGATION/REMEDIAL INVESTIGATION REPORT (VOLUME 1)
PG&E TOPOCK COMPRESSOR STATION
NEEDLES, CALIFORNIA

CH2MHILL

BAO \\ZINFANDEL\PROJ\PACIFICGASELECTRICCO\TOPOCKPROGRAM\GIS\MXD\2006\RFI_COOL_WATER_SYS.MXD RFI_FIG_3_4_COOL_WATER_SYS.PDF 8/9/2006 13:51:14

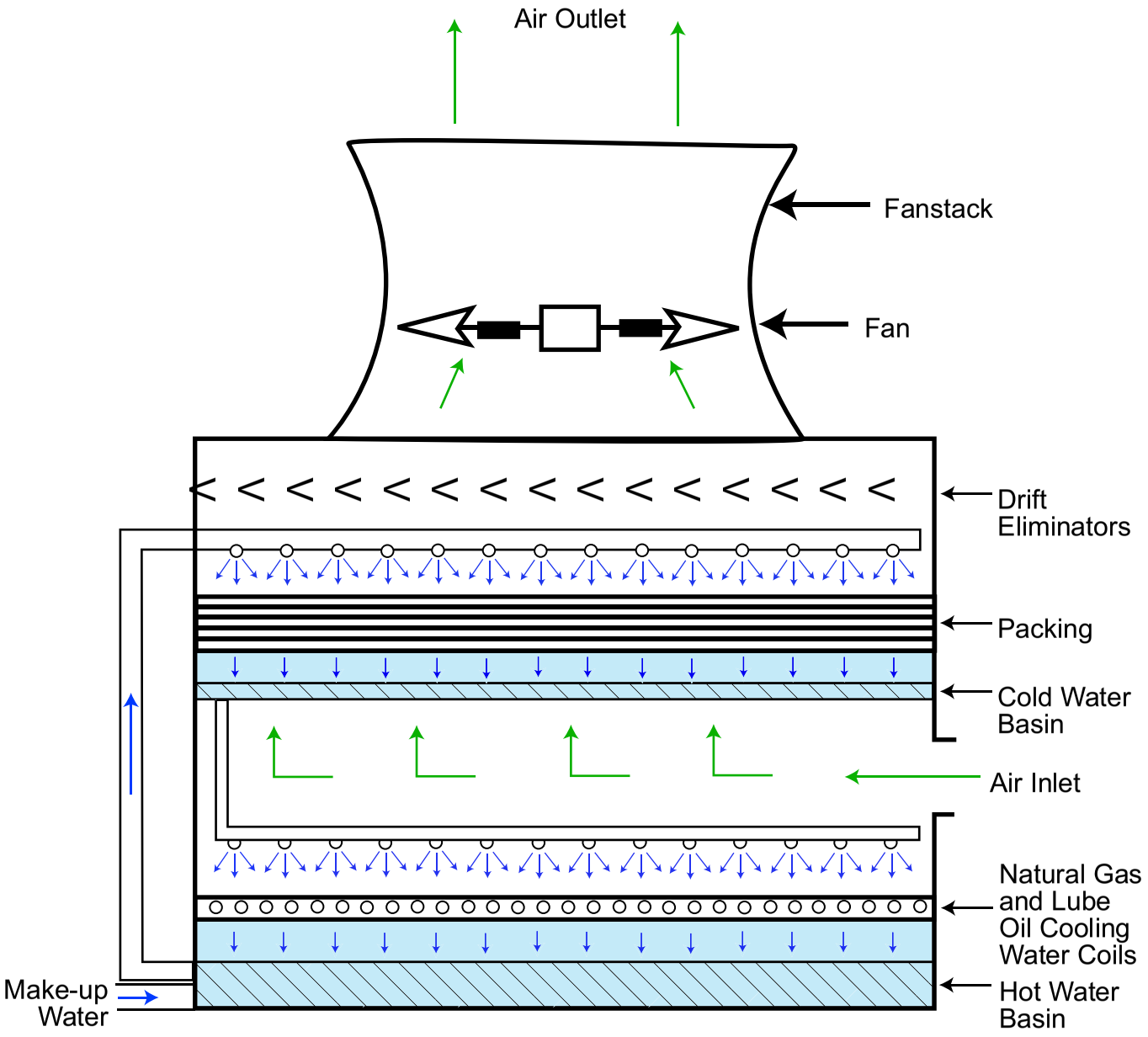

Source: PG&E 1995

FIGURE 3-5
TYPICAL COIL SHED COOLING TOWER
RCRA FACILITY INVESTIGATION/REMEDIAL INVESTIGATION REPORT (VOLUME 1)
PG&E TOPOCK COMPRESSOR STATION
NEEDLES, CALIFORNIA

CH2MHILL

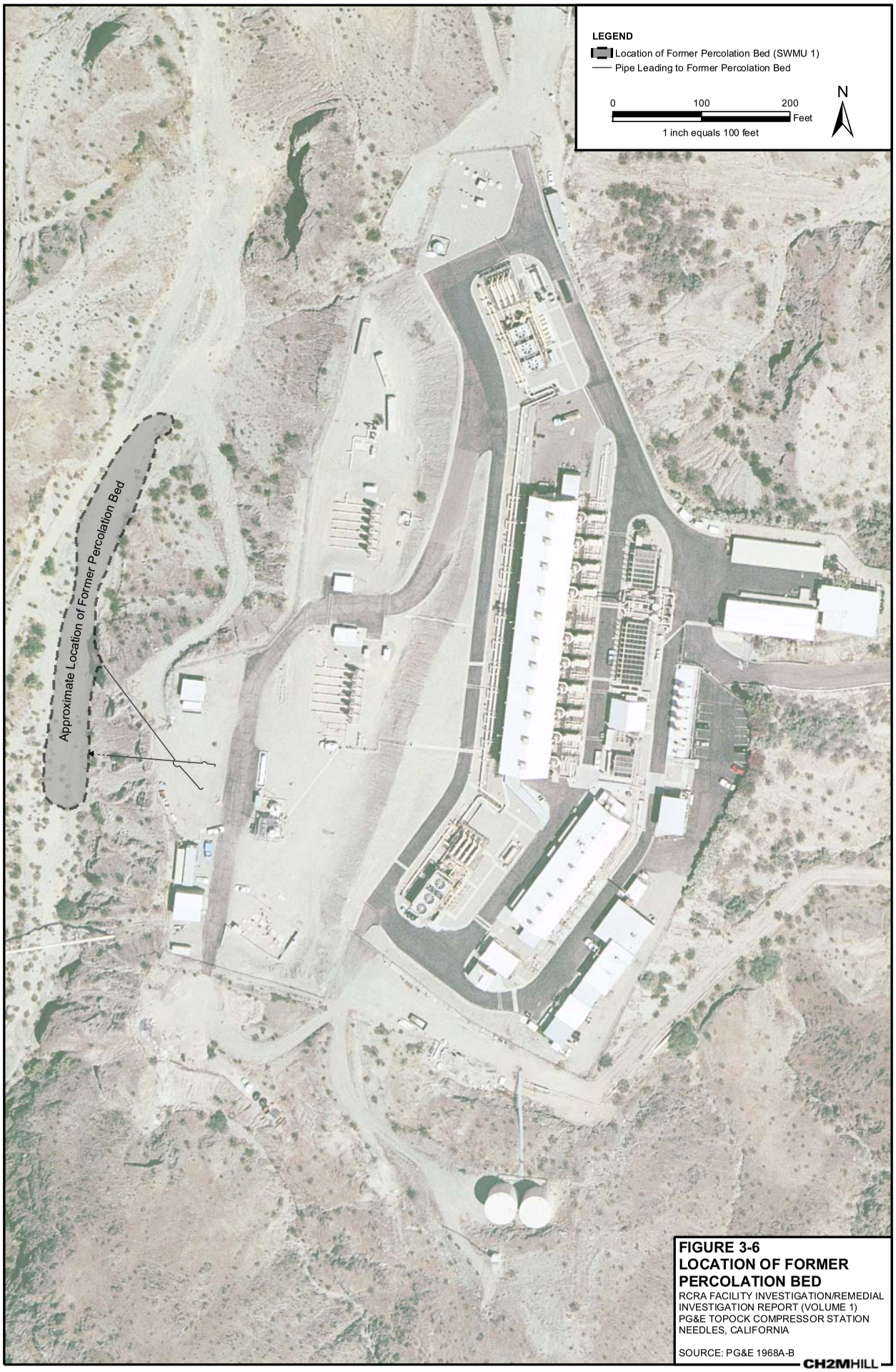

FIGURE 3-6
LOCATION OF FORMER PERCOLATION BED
RCRA FACILITY INVESTIGATION/REMEDIAL INVESTIGATION REPORT (VOLUME 1)
PG&E TOPOCK COMPRESSOR STATION
NEEDLES, CALIFORNIA

SOURCE: PG&E 1968A-B

CH2MHILL

BAO \\ZINFANDEL\PROJ\PACIFICGASELECTRICCO\TOPOCKPROGRAM\GIS\MXD\2006\RFI_TOPOCK_FORMER_HOLDING_POND_OCT04.MXD RFI_FIG_3_6_TOPOCK_FORMER_HOLDING_POND_OCT04.PDF 8/28/2006 16:12:00

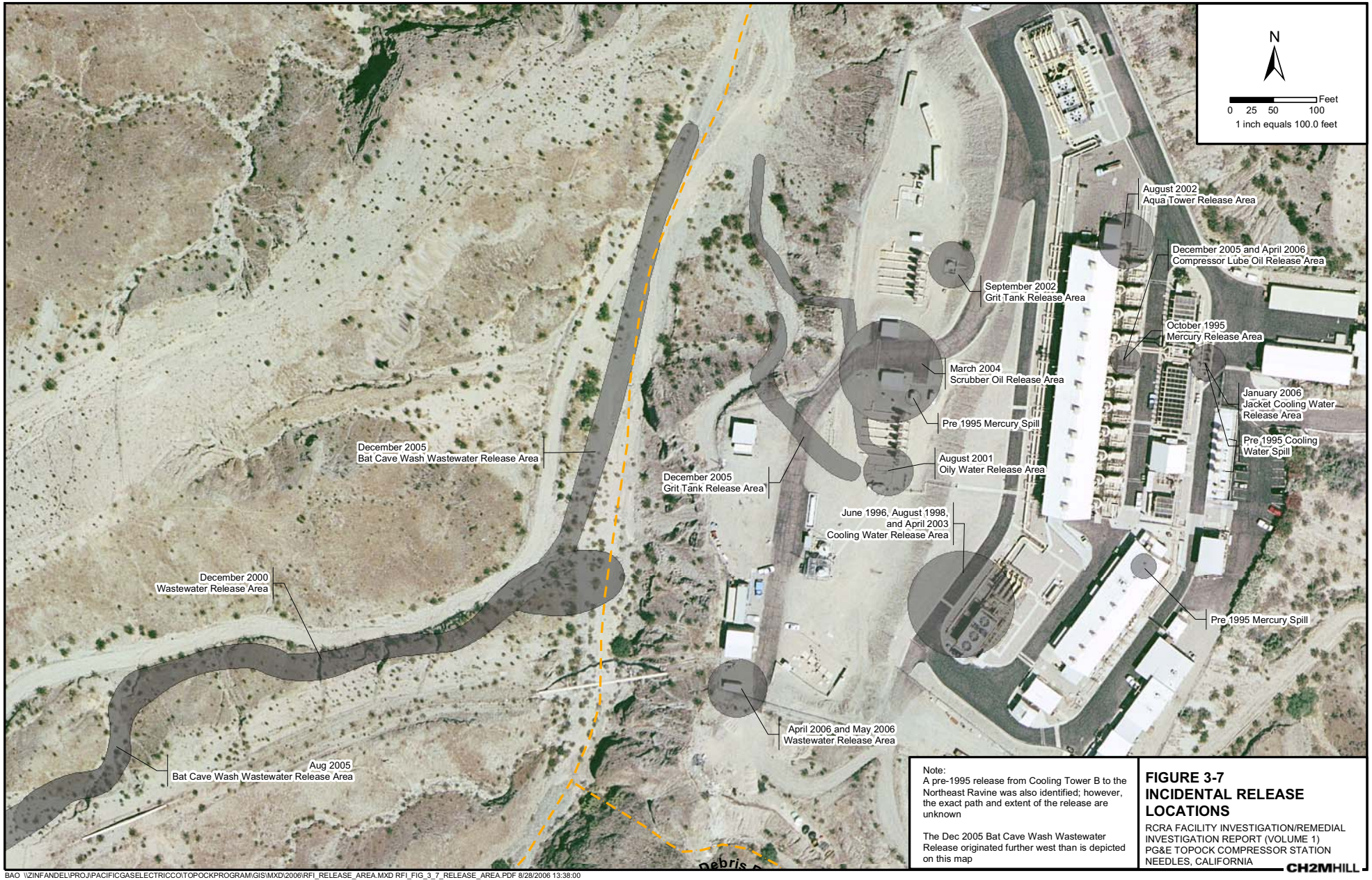

Note:
A pre-1995 release from Cooling Tower B to the Northeast Ravine was also identified; however, the exact path and extent of the release are unknown

The Dec 2005 Bat Cave Wash Wastewater Release originated further west than is depicted on this map

FIGURE 3-7
INCIDENTAL RELEASE LOCATIONS

RCRA FACILITY INVESTIGATION/REMEDIAL INVESTIGATION REPORT (VOLUME 1)
PG&E TOPOCK COMPRESSOR STATION
NEEDLES, CALIFORNIA

CH2MHILL

BAO \\ZINFANDEL\PROJ\PACIFICGASELECTRICCO\TOPOCKPROGRAM\GIS\MXD\2006\RFI_RELEASE_AREA.MXD RFI_FIG_3_7_RELEASE_AREA.PDF 8/28/2006 13:38:00

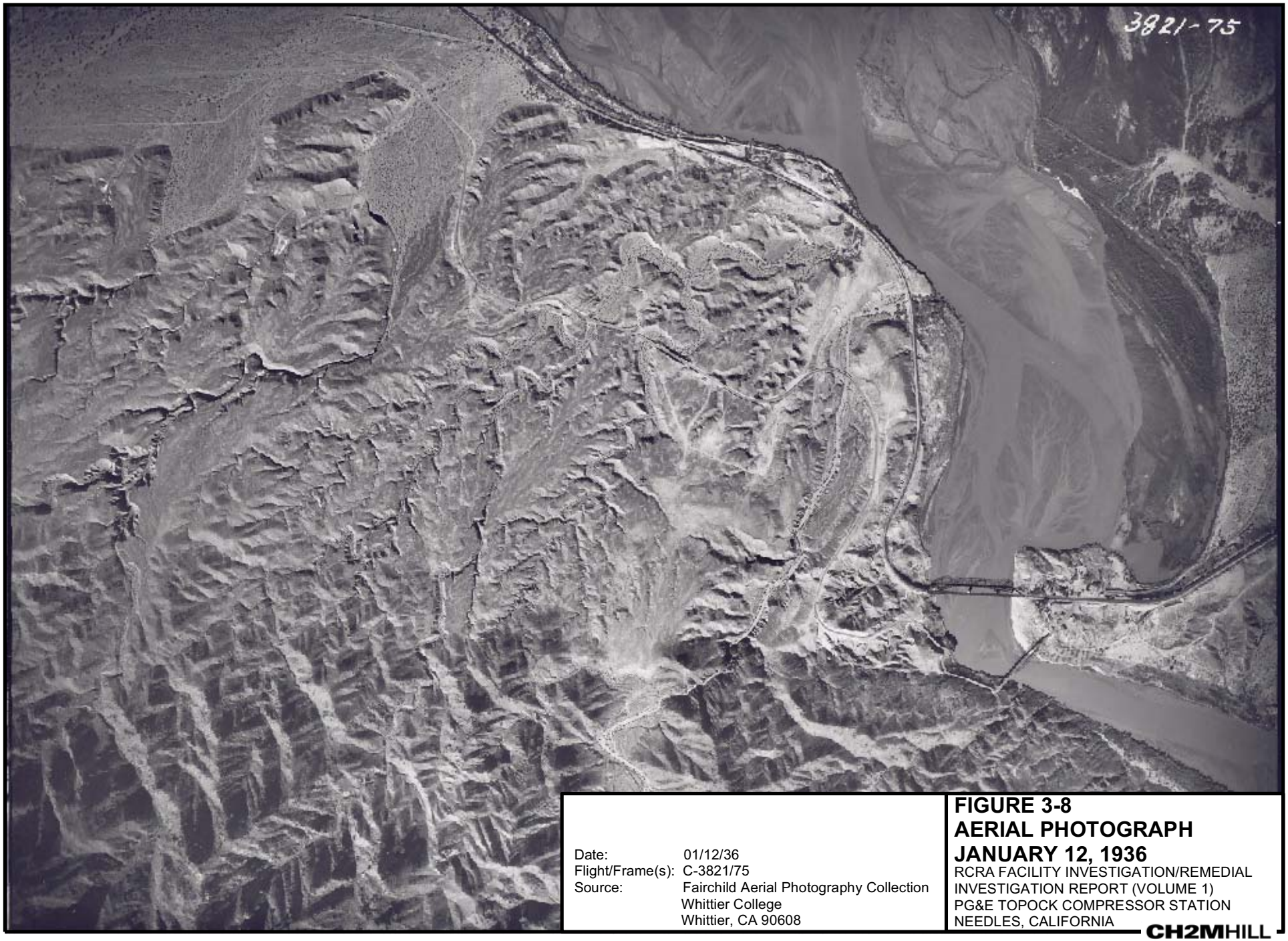

Date: 01/12/36
Flight/Frame(s): C-3821/75
Source: Fairchild Aerial Photography Collection
Whittier College
Whittier, CA 90608

FIGURE 3-8
AERIAL PHOTOGRAPH
JANUARY 12, 1936
RCRA FACILITY INVESTIGATION/REMEDIAL INVESTIGATION REPORT (VOLUME 1)
PG&E TOPOCK COMPRESSOR STATION
NEEDLES, CALIFORNIA

CH2MHILL

BAO \\ZINFANDEL\PROJ\PACIFICGASELECTRICCO\TOPOCKPROGRAM\GIS\MXD\2006\RFI_AERIAL_PHOTO_1936.MXD RFI_FIG_3_8_AERIAL_PHOTO_1936.PDF 8/9/2006 10:17:53

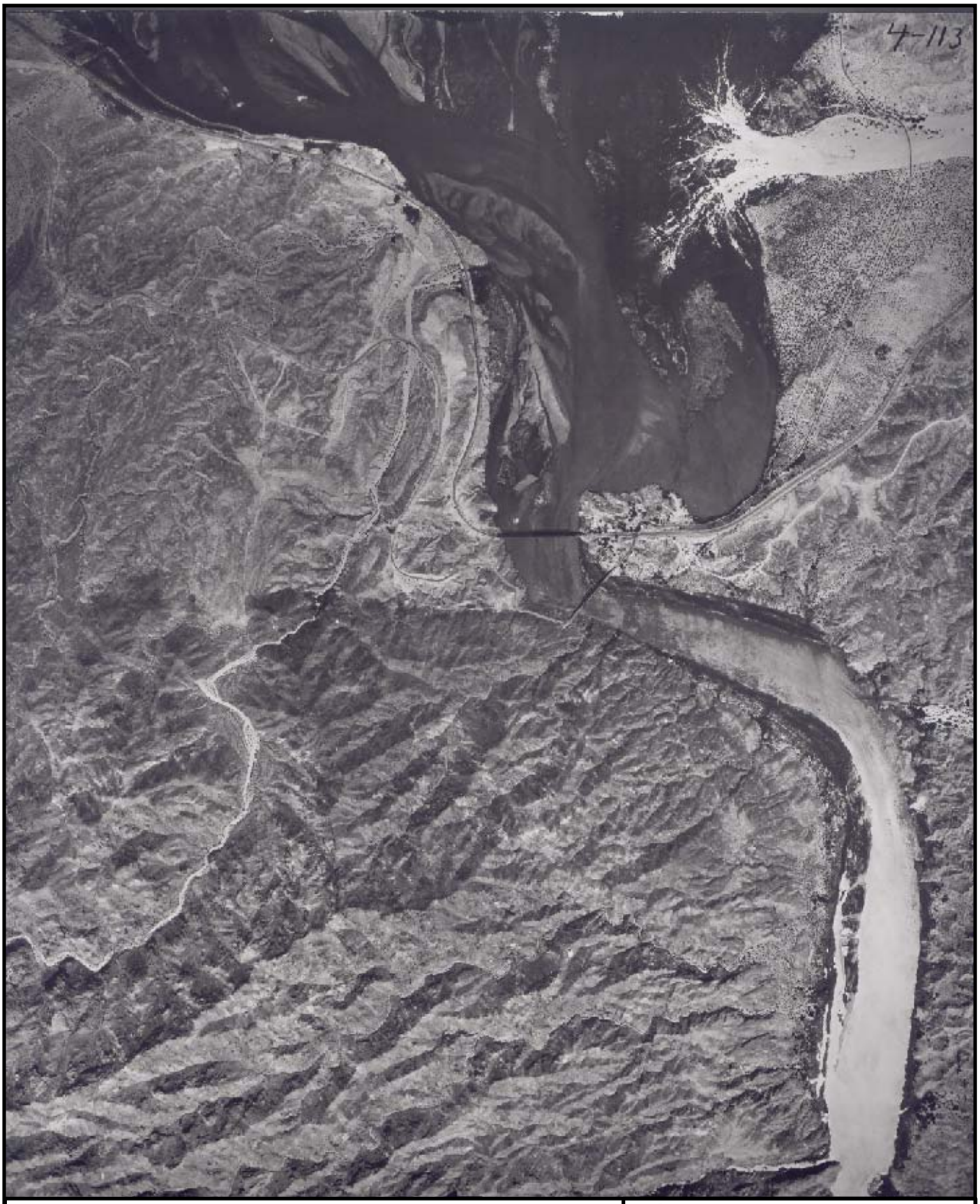

Date: 04/24/42
Flight/Frame(s): C-7800/4:113
Source: Fairchild Aerial Photography Collection
Whittier College
Whittier, CA 90608

FIGURE 3-9
AERIAL PHOTOGRAPH
APRIL 24, 1942
RCRA FACILITY INVESTIGATION/REMEDIAL INVESTIGATION REPORT (VOLUME 1)
PG&E TOPOCK COMPRESSOR STATION
NEEDLES, CALIFORNIA

CH2MHILL

Date: 05/11/44
Flight/Frame(s): C-8924/Section A:46
Source: Fairchild Aerial Photography Collection
Whittier College
Whittier, CA 90608

FIGURE 3-10
AERIAL PHOTOGRAPH
MAY 11, 1944
RCRA FACILITY INVESTIGATION/REMEDIAL INVESTIGATION REPORT (VOLUME 1)
PG&E TOPOCK COMPRESSOR STATION
NEEDLES, CALIFORNIA

CH2MHILL

Date: 09/30/47
Flight/Frame(s): GS-EU 1-5
Source: USGS Rocky Mountain Mapping Center
Earth Science Information Center
Box 25046, Stop 504, DFC
Denver, CO 80225

FIGURE 3-11
AERIAL PHOTOGRAPH
SEPTEMBER 30, 1947

RCRA FACILITY INVESTIGATION/REMEDIAL INVESTIGATION REPORT (VOLUME 1)
PG&E TOPOCK COMPRESSOR STATION
NEEDLES, CALIFORNIA

CH2MHILL

Date: 05/07/53
Flight/Frame(s): AXL-5M-48, AXL-5M-49
Source: USDA photo via
County of San Bernardino Flood Control District
825 E. Third Street
San Bernardino, CA 92415-0835

FIGURE 3-12
AERIAL PHOTOGRAPH
MAY 7, 1953
RCRA FACILITY INVESTIGATION/REMEDIAL INVESTIGATION REPORT (VOLUME 1)
PG&E TOPOCK COMPRESSOR STATION
NEEDLES, CALIFORNIA

CH2MHILL

Date: 05/24/55
Roll/Frame(s): 55W 8015, 8016
Source: NOAA National Geodetic Survey, SSMC#3
Information Services Branch, N/NGS12
1315 East West Highway
Silver Spring, MD 20910

FIGURE 3-13
AERIAL PHOTOGRAPH
MAY 24, 1955

RCRA FACILITY INVESTIGATION/REMEDIAL INVESTIGATION REPORT (VOLUME 1)
PG&E TOPOCK COMPRESSOR STATION
NEEDLES, CALIFORNIA

CH2MHILL