A Comparison of Three Methods to Estimate Environmental Impacts

David E. Ellis, DuPont
P. Brandt Butler, URS
Gordon Burnett, URS
Todd M. Krieger, DuPont

Martinsville Unit I

- **Concentrations as high as 30,000 ppm CT in soil**
- **Approximately 8,000 cubic yards of impacted soil, well delineated**
- **Approximately 22 tons of CT is in the vadose zone (0-25' bgs)**
- **Down gradient ground water and surface water impacts**

•Source treatment was selected because:

- the source area is small and well-defined,
- source control may be effective in controlling migration and plume growth, and
- source control fit with plans for future site use and had no O&M requirements

Sustainability Estimates

DuPont CRG spread sheets

Life cycle analysis using SimaPro software

Total impacts vs. on-site impacts only

DISCLAIMER!

The results presented here are preliminary. Our work on this subject is still in progress, so our conclusions may change.

ZVI/Clay Remediation - Tasks and Quantities

Task	Item	Quantities
Mobilization and Site Prep	Time Staff Equipment	10 days 11 - 1 Super, 1 Eng'r, 9 Operators & Laborers Excavator, fork lifts (2), crane, mix head, others
Well Abandonment	Time	1 day – trackhoe
Crane and Mix Head Assembly	Time	5 day
Utility Abandonment	Time	3 day
Shallow Soil Mixing	Time Staff Equipment Materials	30 days 4 Level C, 7 Level D Mix head/crane, fork lifts, excavator 225 ton ZVI, 340 ton kaolinite, 445 ton kiln dust 250,000 gal water
Demob, including grading	Time Equipment	4 days Excavator
Asphalt Paving	Time Staff Equipment Materials	10 days 2 Asphalt spreader and roller 3" base coarse, 2" top coarse

Microsoft Excel - CRG_Unit I_011509.xls

DuPont Confidential

Greenhouse Gases (Tons of CO_2 Equivalents)		Energy Usage (kWh)		Occupational Risk		Resource Usage		Local		Consumables	
Gasoline	9	Gasoline	38,678	Level A Exposure Hrs	--	Potable Water (gal)	250,000	Dust Generation	Moderate	Gasoline (gal)	930
Diesel	129	Diesel	467,628	Level B Exposure Hrs	1080	Total Groundwater (gal)	0	Noise Level	Moderate	Diesel (gal)	10,035
Contaminant Degradation	6.38	PVC	0	Level C Exposure Hrs	--	Groundwater Retained in F	0	Traffic Congestion	Moderate	PVC (Total lb)	0
PVC	0	Steel	0	Level D Exposure Hrs	4,519	Soil (tons)	450	PM-2.5, ton	2	Steel	0
Steel	0	HDPE	0	Total G&D On-Site Milea	8,998	Landfill Space (ac-ft)	0	PM-10, ton	14	HDPE	0
HDPE	0	GranulatedCarbon	0	Total D Off-Site Mileage	5,683	Land (Acre)	0.25	NOx , ton	3.16	GranulatedCarbon	0
GranulatedCarbon	0	Cement	0	Total G Off-Site Mileage		Air	0	SOx, ton	0.27	Cement	0
Cement	0	Concrete	0					VOCs, ton	0.17	Concrete	0
Concrete	0	ZVI	1,669,500							ZVI	225
ZVI	297	Kaolinite	1,055,700							Kaolinite	345
Kaolinite	162	Kiln Dust	358,670							Kiln Dust	445
Kiln Dust	340	Potable Water	1,000							Asphalt	428
Potable Water	0	Total Groundwater	0							Grid Energy	0
Total Groundwater	0	Soil	3,600							Propane	0
Soil	1	Asphalt	309,629								
Asphalt	20	Grid Energy	0								
Grid Energy	0	Propane	0								
Propane	0										
TOTAL	966	TOTAL	3,904,405								

OS / P_NoC / Worker_Exp / P / G_NoI / G / ZVI-Clay In-Situ Treatment / ZVI-Clay In-Situ

SimaPro Remediation Assemblies

52.102.121.68\Default\v716_120408; Remediation 2009 Alt - [Edit assembly product stage 'PROJECT Asphalt...

File Edit Calculate Tools Window Help

Input/output | Parameters

Name: PROJECT Asphalt Paving - Unit I - ZVI Clay

Image

Status

Materials/Assemblies	Amount	Unit	Distribution	SD^2 or 2*SDMin
(Insert line here)				

Processes	Amount	Unit	Distribution
Vehicle - ON-SITE, Support, 10MPG, 6mph, Gasoline	Days*HPD*2 = 59.444	hr	
Vehicle - PROJECT, Dump Truck, 3 MPG, 16 MPH, 18 ton, Diesel	TruckDays*HPD*Trucks = 29.722	hr	
Operation ON-SITE, Asphalt Spreader, Diesel, 4 GPH	Days*HPD*1 = 29.722	hr	
Operation ON-SITE, Roller, Diesel, 4 GPH	Days*HPD*1 = 29.722	hr	
Operation ON-SITE, Backhoe, Diesel, 4 GPH	Days*HPD*1 = 29.722	hr	
On-Site Labor & Eq Operation - Level C	0	hr	Undefined
On-Site Labor & Eq Operation - Level D	Days*HPD*(5+1-2) = 118.89	hr	
(Insert line here)			

Martinsville Unit I - All GHG Impacts

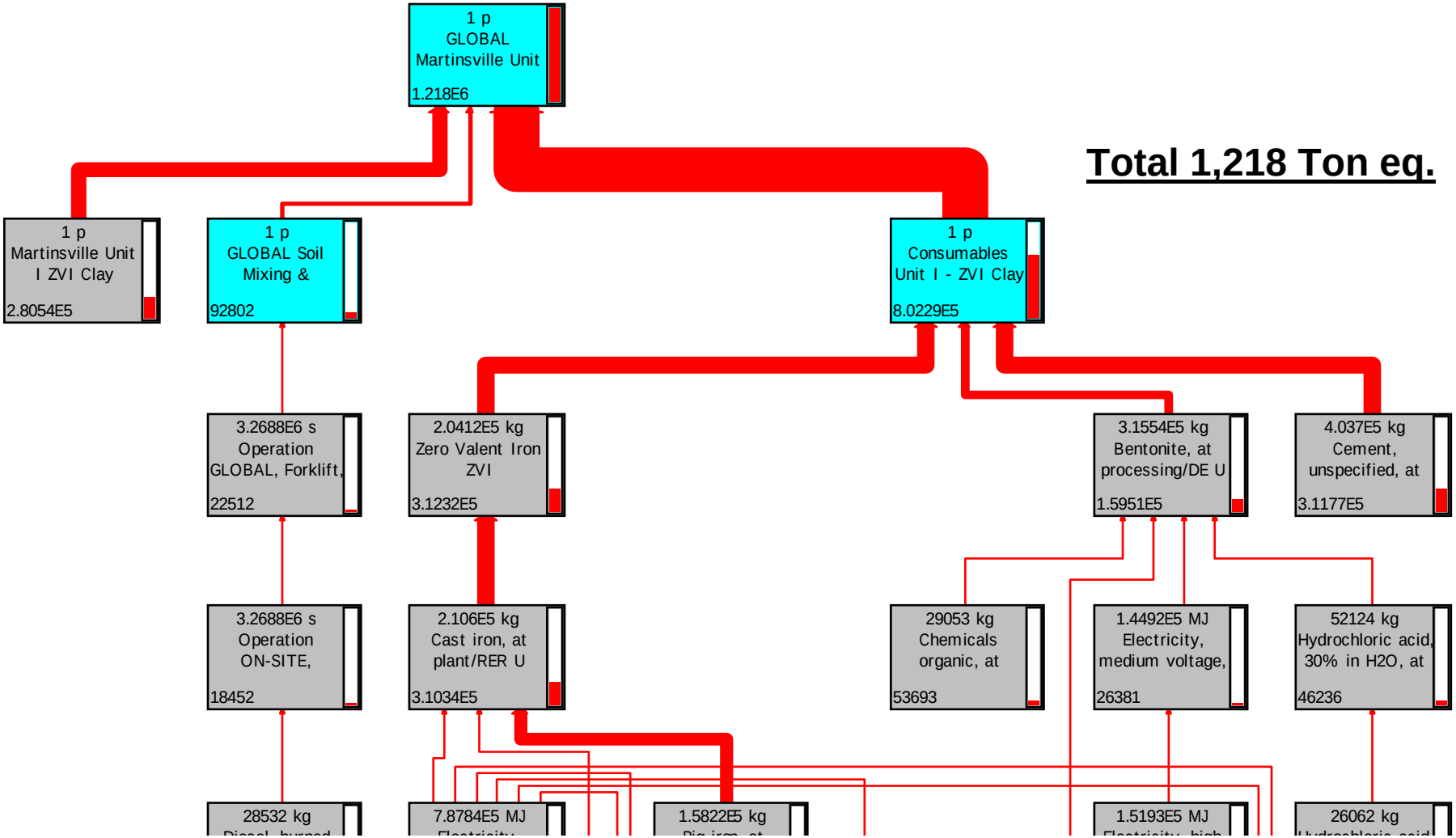

Total 1,218 Ton eq.

Martinsville Unit I On-Site GHG – kg CO2 eq.

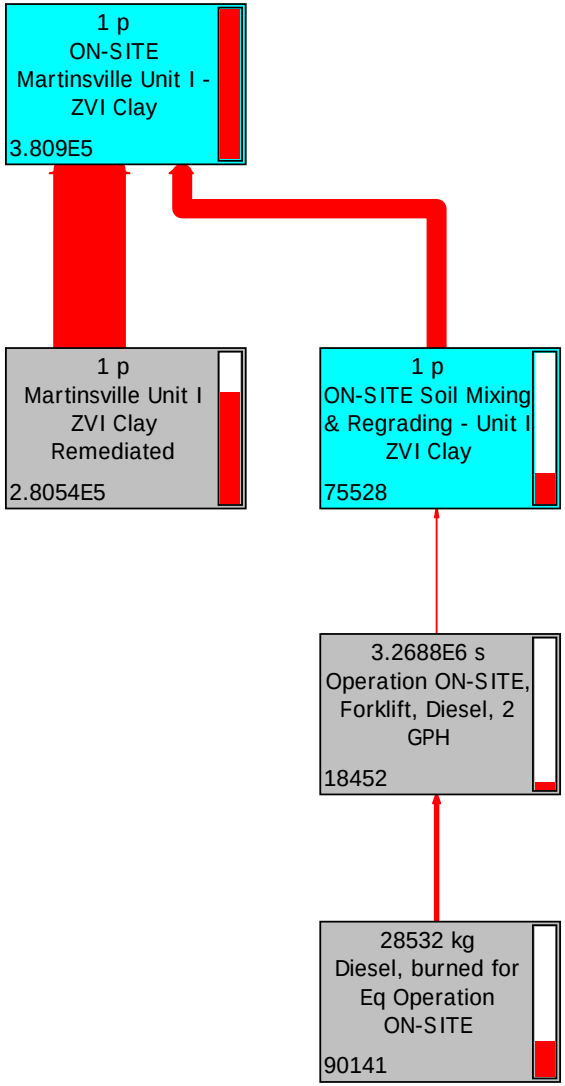

Total 381 Ton eq.

Martinsville Unit I – All GHG Impacts

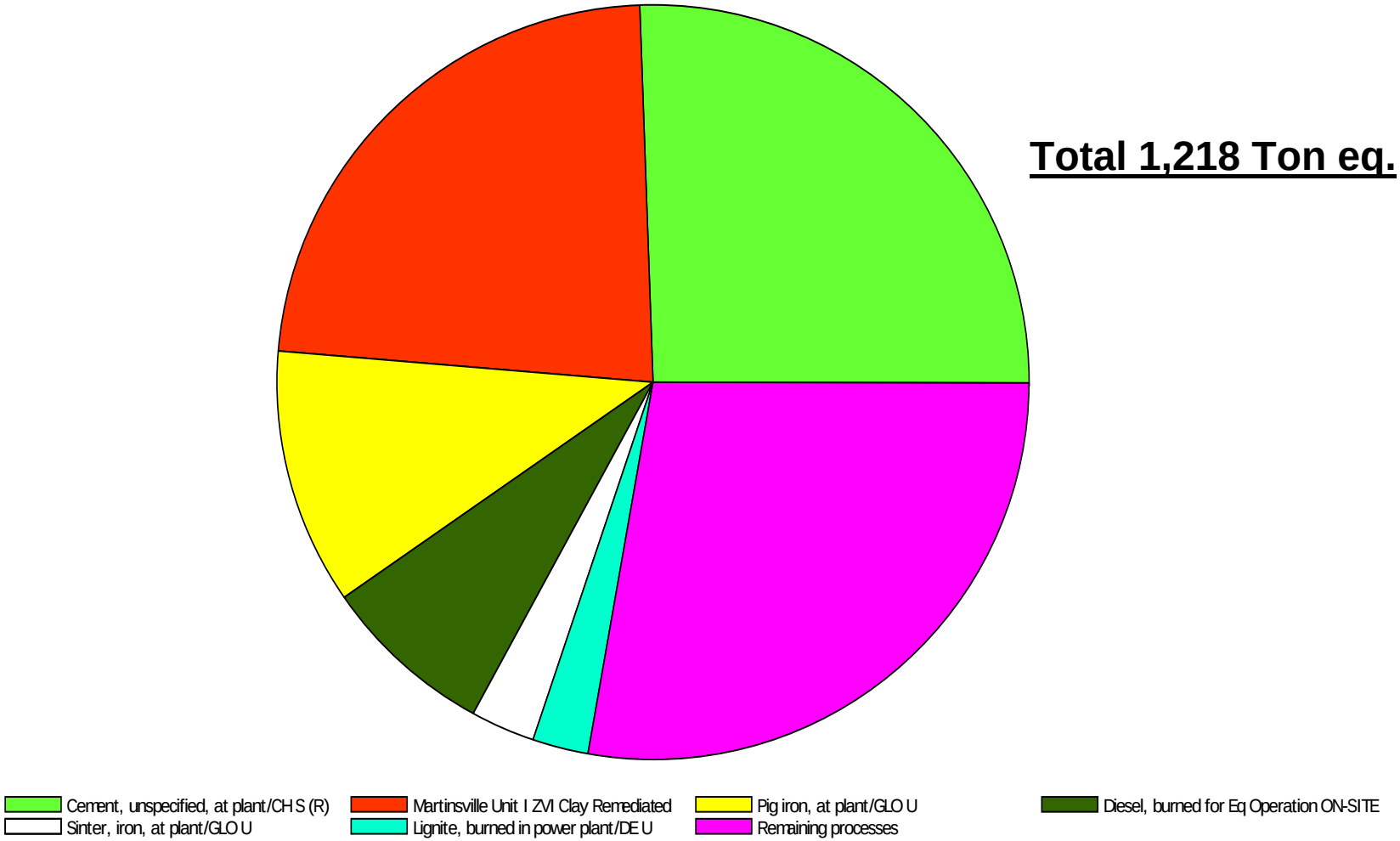

Total 1,218 Ton eq.

alyzing 1 p 'GLOBAL Martinsville Unit I - ZVI Clay'; Method: Remediation 2009 IA 2 / characterization

Martinsville Unit I – On-Site GHG Impacts

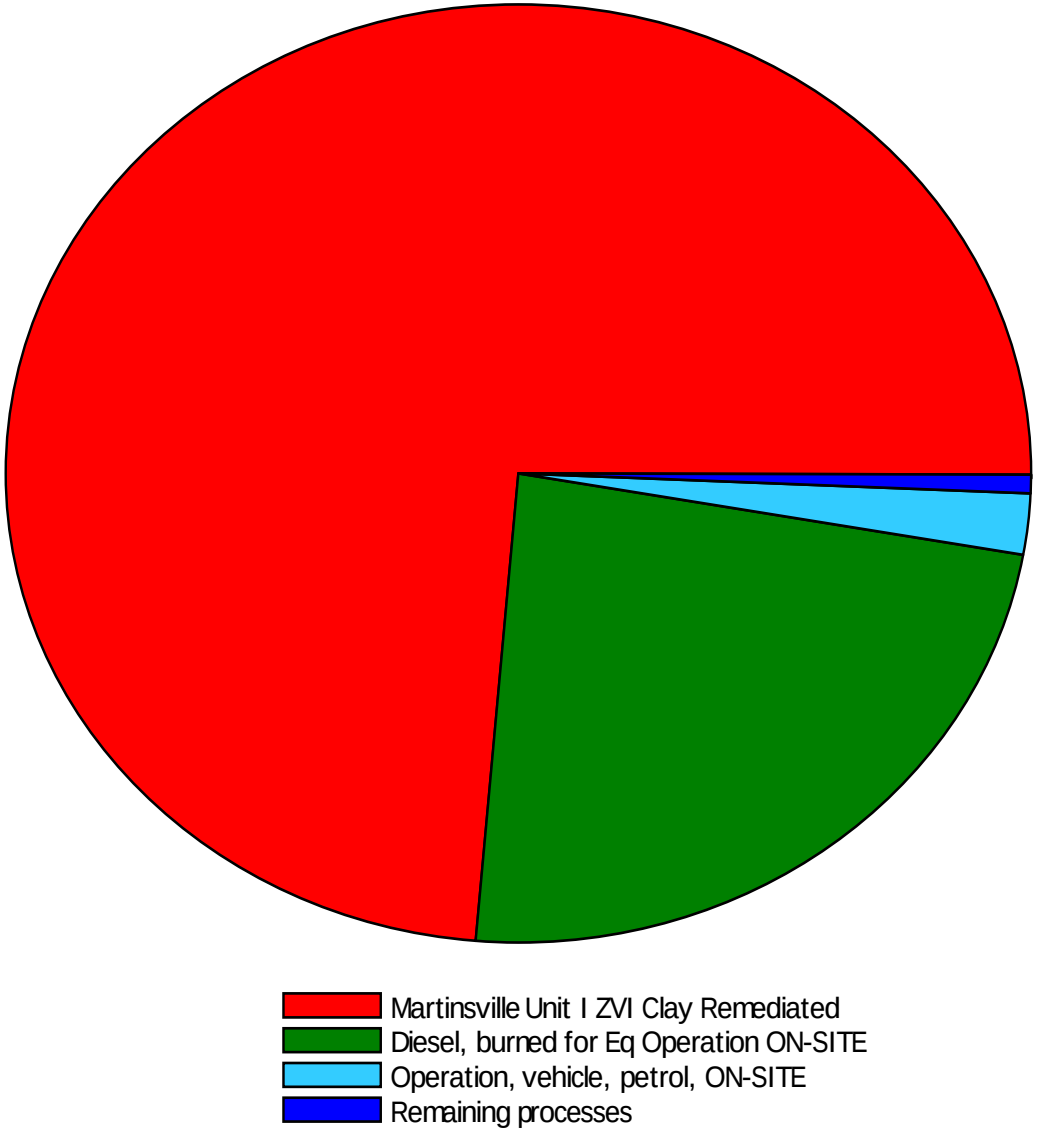

Total 381 Ton eq.

Martinsville Unit I – Worker exposure by Process

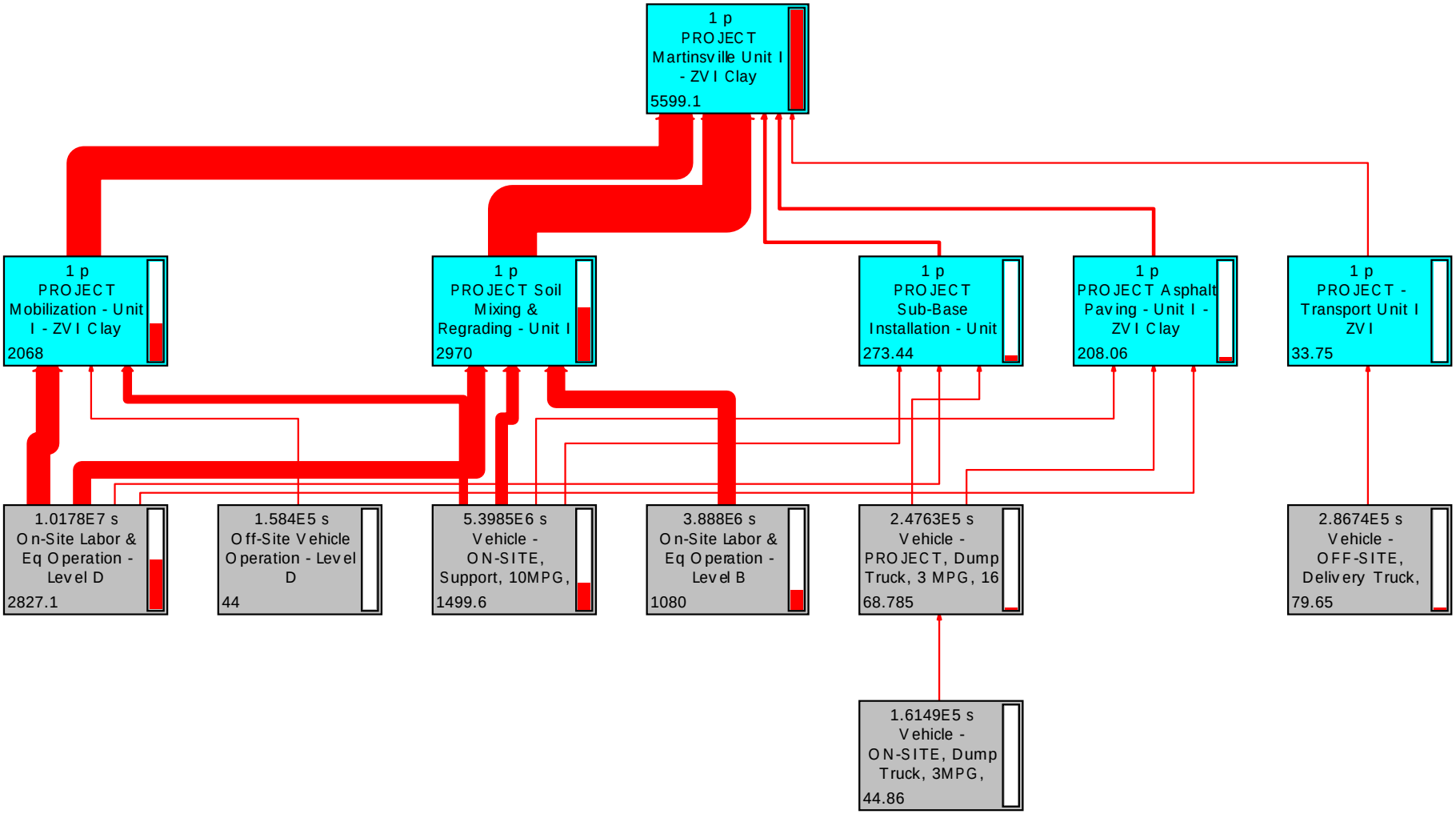

Worker Exposure Hours by Process

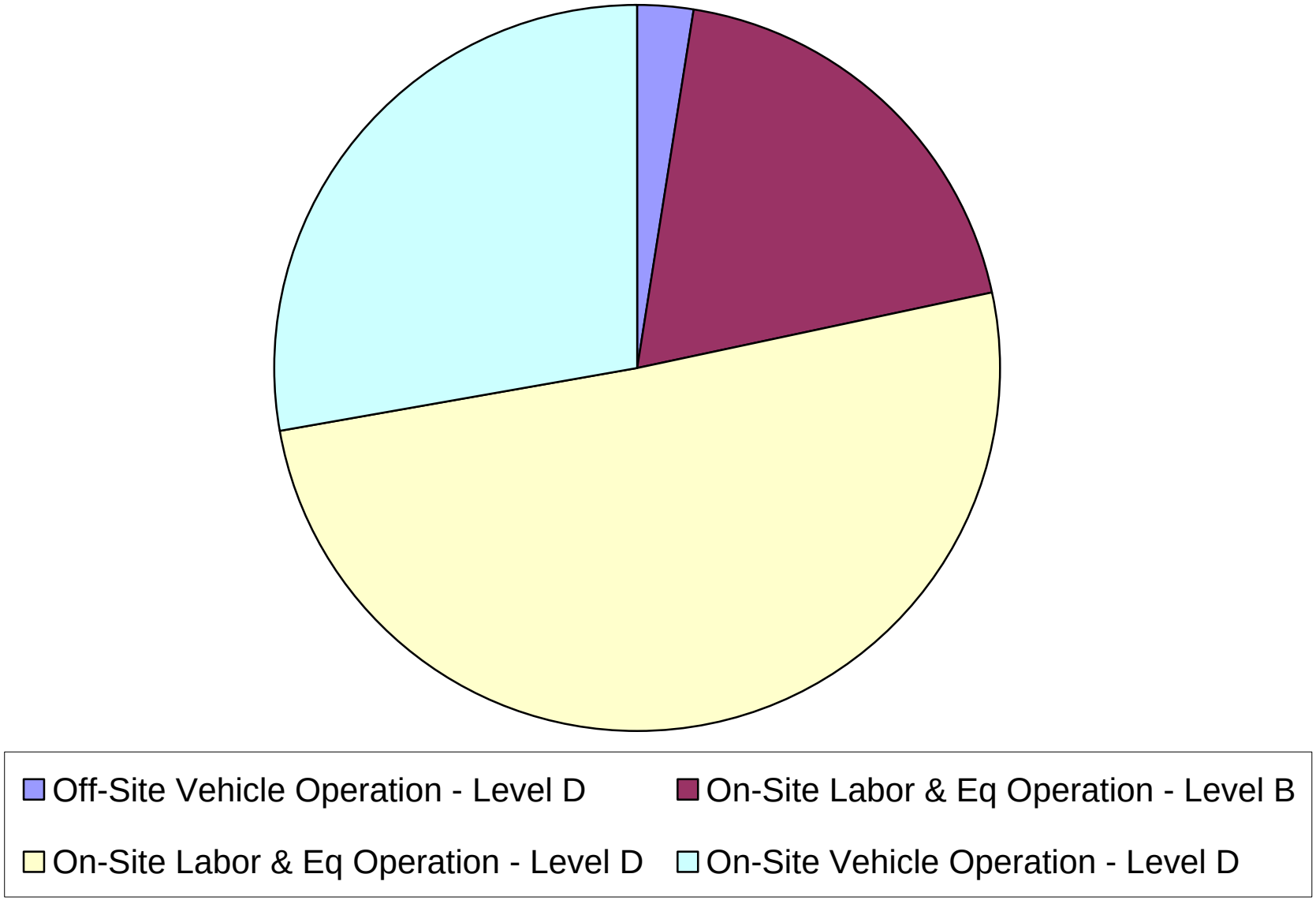

Comparison of Impacts

Measures of Sustainability	On-Site Only	Complete Project	CRG EXCEL
GHG Gas CO_2 Eq (Tons)	420	1343	966
GHG Gas (ton - CO2 Eq) No CCl4	111	1033	959
Energy Usage (kWh) LHV Basis	378,000	3,713,000	3,904,000
Energy Usage (kWh) HHV Basis	405,000	4,036,000	4,243,000

Life Cycle Analysis vs. Spread Sheets

What did we miss using spread sheets?

- The impact of emitting CT during mixing
- Updated IPCC factors for GHG equivalents
- Most of the grid energy

Where do spread sheets and LCA agree?

- The large impact of considering consumables
- The big differences between global and on-site impacts

The advantages of LCA

- Easy to troubleshoot models & catch data errors using graphical displays
- Consistent modeling of vehicles & equipment on all projects
- Uses reputable impact assessments (IPCC, EcoIndicator 99, TRACI, etc.)
- Easy to track infrastructure or consumables if desired
- Can set up model to track On-Site / Off - Site Burdens

Conclusions and Recommendations

Off-site impacts must be considered to fully understand the net environmental benefit or impact of a remedial action

Life cycle analysis provides more complete information than other methods

The impact of manufacturing consumables must be included in remediation sustainability estimates