Monitoring Well Design and Construction for Hydrogeologic Characterization

Guidance Manual for Ground Water Investigations

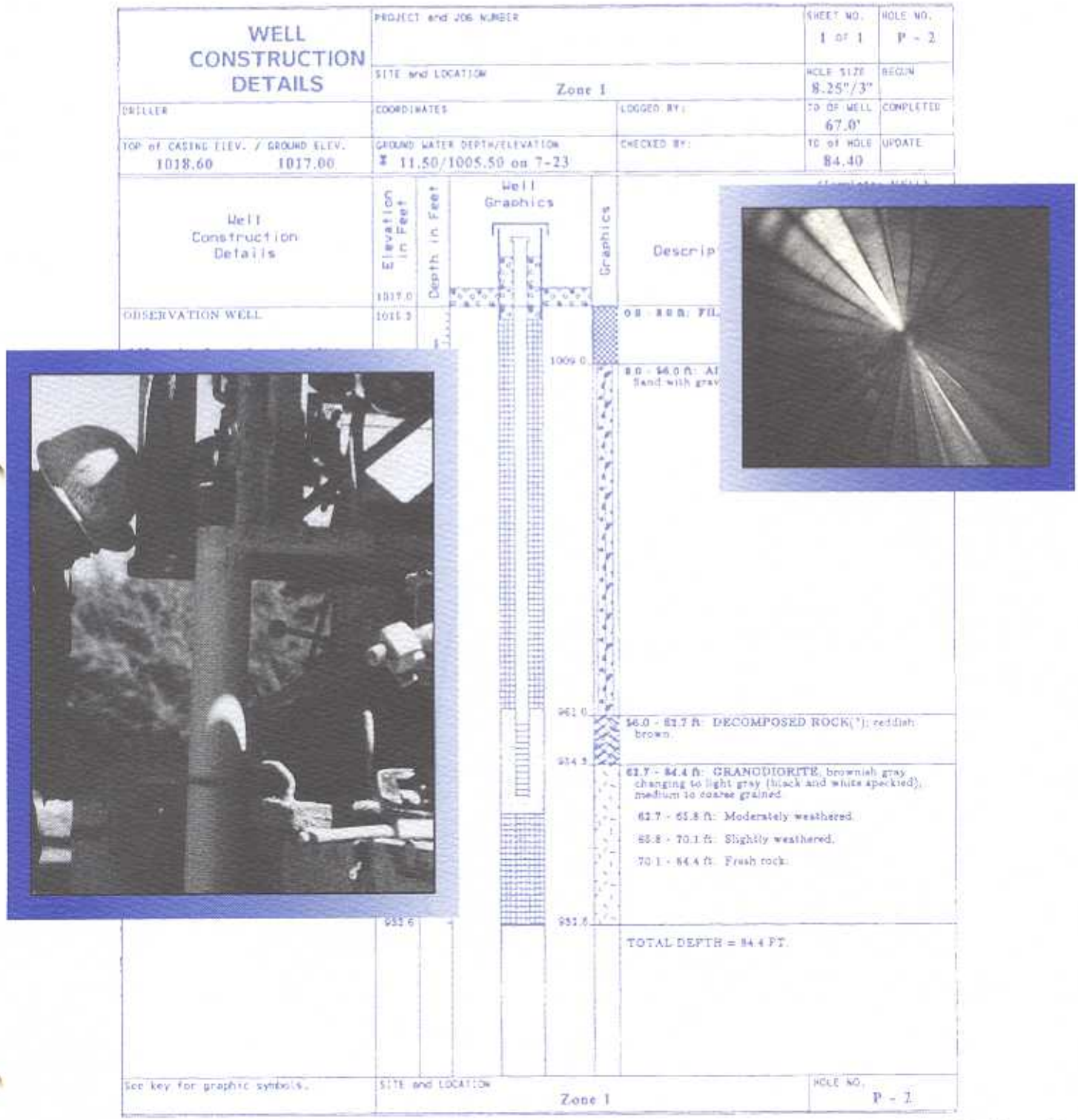

State of California
Environmental Protection Agency

MONITORING WELL DESIGN AND CONSTRUCTION FOR HYDROGEOLOGIC CHARACTERIZATION

Guidance Manual for Ground Water Investigations

July 1995

Pete Wilson
Governor
State of California

James Strock
Secretary
California Environmental Protection Agency

The California Environmental Protection Agency:

Department of Toxic Substances Control
State Water Resources Control Board
Integrated Waste Management Board
Air Resources Board
Department of Pesticide Regulation
Office of Environmental Health Hazard Assessment

FOREWORD

The California Environmental Protection Agency (Cal/EPA) is charged with the responsibility of protecting the state's environment. Within Cal/EPA, the Department of Toxic Substances Control (DTSC) has the responsibility of managing the state's hazardous waste program to protect public health and the environment. The State Water Resources Control Board and the nine Regional Water Quality Control Boards (RWQCBs), also part of Cal/EPA, have the responsibility for coordination and control of water quality, including the protection of the beneficial uses of the waters of the state. Therefore, the RWQCBs work closely with DTSC in protecting the environment.

To aid in characterizing and remediating hazardous substance release sites, DTSC had established a technical guidance work group to oversee the development of guidance documents and recommended procedures for use by its staff, local governmental agencies, responsible parties and their contractors. The Geological Support Unit (GSU) within DTSC provides geologic assistance, training and guidance.
This document was prepared by GSU staff in cooperation with the technical guidance work group and the RWQCBs. This document has been prepared to provide guidelines for the investigation, monitoring and remediation of hazardous substance release sites. It should be used in conjunction with the two-volume companion reference for hydrogeologic characterization activities:

Guidelines for Hydrogeologic Characterization of Hazardous Substances Release Sites
Volume 1: Field Investigation Manual
Volume 2: Project Management Manual

Please note that, within the document, the more commonly used terms, *hazardous waste site* and *toxic waste site*, are used synonymously with the term hazardous substance release site. However, it should be noted that any unauthorized release of a substance, hazardous or not, that degrades or threatens to degrade water quality may require corrective action to protect its beneficial use.

This document supersedes the 1990 draft of the DTSC *Scientific and Technical Standards for Hazardous Waste Sites, Volume 1, Chapter 8*, and is one in a series of Cal/EPA guidance documents pertaining to the remediation of hazardous substance release sites.

ACKNOWLEDGEMENTS

The preparation of this guidance document was achieved through the efforts of many individuals. The following people had primary responsibility for editing and writing:

Steve Belluomini	**Supervising Hazardous Substances Engineering Geologist I,**
Bill Owen	**Hazardous Substances Engineering Geologist,**
John Woodling	**Senior Hazardous Substances Engineering Geologist.**

Members of the technical guidance work group participated in the development of this document by providing comments and direction. Additional review and comments were provided by the Regional Water Quality Control Boards and Dennis Parfitt of the State Water Resources Control Board. We thank them for their cooperation and helpful suggestions.

Finally, thanks are extended to the staff of the Geological Support Unit, and to the many anonymous reviewers outside DTSC, whose comments were indispensable for completing this document.

TABLE OF CONTENTS

SECTION PAGE

FOREWORD i
ACKNOWLEDGEMENTS ii

1 INTRODUCTION 1

1.1 Purpose 1
1.2 Application 1
1.3 Limitations 2

2 MONITORING WELL DESIGN AND CONSTRUCTION 3

2.1 Borehole Construction 3
2.2 Stratigraphic Control 4
2.3 Driven Wells 5
2.4 Well Casing and Screen Materials 5

2.4.1 General Casing and Screen Material Characteristics 8
2.4.2 Types of Casing Materials 14
2.4.3 Well Casing Diameter 23
2.4.4 Casing Cleaning Requirements 24
2.4.5 Coupling Procedures for Joining Casing 24

2.5 Well Intake Design 26

2.5.1 Well Screen 26
2.5.2 Filter Packs/Pack Material 27

2.6 Annular Sealants 29
2.7 Surface Completion 30
2.8 Well Surveying 31
2.9 Well Development 32
2.10 Documentation of Well Design, Construction, and Development 35

3 SPECIALIZED WELL DESIGNS 36
4 EVALUATION OF EXISTING WELLS 37
5 DECOMMISSIONING OF GROUND WATER MONITORING WELLS AND BOREHOLES 37

6 REFERENCES 41

INDEX 44

TABLE OF CONTENTS
(CONTINUED)

ILLUSTRATION PAGE

Table 1. General Recommendations for Selection of Well Casing materials 9

Table 2. Comparative Strengths of Well Casing Materials 11

Table 3. Recommendations Regarding Chemical Interactions With Well Casings 15

Figure 1. Diagram of a Typical Monitoring Well....6

1 INTRODUCTION

The guidelines that follow are modified from the 1991 revision of Test Methods for Evaluating Solid Waste, Volume II, Chapter 11, published by the United States Environmental Protection Agency (USEPA). This document is commonly referenced by its document number, SW-846. The California Environmental Protection Agency (Cal EPA) has incorporated appropriate sections of SW-846 into this document, in an effort to minimize redundant or contradictory guidance between the Cal EPA and USEPA.

Although developed for monitoring and corrective actions at permitted facilities under the Resource Conservation and Recovery Act (RCRA), the methods and materials discussed in Chapter 11 of SW-846 are applicable to all hazardous waste sites. As such, SW-846 is readily adaptable for investigations pursued under the authority of the Cal EPA.

1.1 Purpose

This document is intended to provide guidelines for the construction of monitoring wells used for the hydrogeologic characterization of hazardous waste sites. The purpose of this document is to aid in the selection of materials, provide recommended quality assurance and quality control (QA/QC) procedures, and give a standardized approach to the presentation of monitoring well construction records. The recommendations contained herein represent minimal criteria judged necessary to obtain quality data and assure reasonable and independently verifiable interpretations.

The American Society for Testing and Materials (ASTM) has developed guidelines for well construction and decommissioning (ASTM, 1990 and 1992). The Cal EPA has incorporated these guidelines, where technically and legally relevant, into the Cal EPA guidance framework. The Cal EPA is striving to keep up to date with the development of external guidelines, and every attempt has been made to incorporate the intent of those documents into the Cal EPA guidelines. As new techniques gain acceptance and existing techniques are refined, this document will be updated accordingly to meet the state of the science.

The recommendations presented here are a subset of the larger site characterization process. The additional investigative tools necessary to adequately characterize a site are outlined in the Guidelines for Hydrogeologic Characterization of Hazardous Substance Release Sites (Cal/EPA, 1995).

1.2 Application

Monitoring wells provide a means to assess ground water quality, estimate ground water flow direction and velocity, and calculate aquifer hydraulic properties. With this information, hydrogeology can be characterized, contamination can be defined, and appropriate remedies can be designed to mitigate ground water contamination. The following guidelines are presented in an effort to promote the proper construction of monitoring wells and increase the overall quality of site characterizations throughout the state.

1.3 Limitations

The recommendations presented here represent minimal criteria that can aid obtaining quality data and assuring reasonable and independently verifiable interpretations. Some sites may require investigative efforts above and beyond the scope of this document, while at other sites a less rigorous application of this guidance may be appropriate. It is the obligation of the responsible parties and the qualified professionals performing site investigations to consult with pertinent regulatory agencies, identify all requirements and meet them appropriately.

This document discusses broad categories of materials and methods that can be used in monitoring well construction. It does not define specific operating procedures for material selection or well construction. The qualified professional in charge of the field investigation should specify the methods, equipment and operating procedures in an appropriate work plan and document any significant departures from the work plan that were necessary during the course of the investigation.

The following sections provide a basic summary of monitoring well design and construction techniques. A comprehensive guide to choosing appropriate drilling techniques is presented by Aller et al. (1989). Although many of the techniques presented in this section may be applied to the design and installation of piezometers, this section is geared to the design and construction of monitoring wells.

This document does not supersede existing statutes and regulations. State regulations and ordinances which address monitoring well construction and performance standards include:

- Department of Water Resources Bulletin 74-90, California Well Standards;
- Title 22, California Code of Regulations, Division 4.5, Chapter 14, Article 6, Environmental Health Standards for the Management of Hazardous Waste;
- Title 23, California Code of Regulations, Division 3, Chapter 15, Article 5 and Chapter 16, Article 4, Regulations of the State Water Resources Control Board and Regional Water Quality Control Boards;
- California Business and Professions Code, Division 3, Chapter 9.

Additionally, county, city and local water agencies may also have ordinances for well construction. Federal, state and local regulations, statutes, and ordinances should be identified when required by law, and site characterization activities should be performed in accordance with the most stringent of these requirements where applicable, relevant and appropriate.

2 MONITORING WELL DESIGN AND CONSTRUCTION

2.1 Borehole Construction

When a monitoring well installation is planned, sufficient thought should be given to the quality of the borehole that will contain the well. The following factors should be considered in the borehole construction:

- drilling method;
- borehole diameter;
- annular space;
- borehole alignment;
- total depth of the hole;
- selection of backfill material;
- development of the well.

The diameter of a monitoring well borehole should be sufficiently large to contain the well casing and provide an adequate annular space (as measured from the outside of the casing to the borehole wall). Additional allowances should be made as needed for other pipes that may be installed in the annular space, such as sand fill pipes or sounding tubes.

The annular space is the gap between the outside of the casing and the borehole wall. The annular space should be large enough to allow clearance of a 1.5-inch I.D. tremie pipe and for a sufficient width of filter pack and annular seal material. Recommended annular space widths are as follows:

- between casing and borehole wall - 2.5 inches minimum;
- between well casing and conductor casing - 2 inches minimum;
- between surface conductor casing and borehole wall - 3 inches minimum;
- maximum annular space - 5 inches.

Annular space widths larger than 5 inches may reduce the ability to develop a well, or may contribute to casing damage from heating during grout curing.

In situations where precise lithologic data are needed (e.g., dipping or folded strata), or the location of target zones is critical, borehole alignment becomes an important criterion for monitoring well screen placement. Borehole alignment can be assessed through a borehole deviation survey, using a borehole dipmeter or similar downhole tool. Fortunately, misalignment is usually not significant for shallow monitoring well boreholes (less than 200 feet deep, based on Cal EPA experience); therefore, the additional cost for borehole deviation surveys is usually not justified. However, where

precise geologic or hydrogeologic information is needed from deep boreholes (significantly greater than 200 feet), borehole deviation surveys are recommended.

The depth of each monitoring well is determined by site-specific hydrogeologic conditions and monitoring objectives. For example, wells may be designed to monitor the water table, within a water-bearing zone or at the base of an aquifer. Regardless of monitoring depth, the depth of completion of the monitoring well borehole should generally be within one foot of the bottom of the screened interval.

Sometimes boreholes are drilled to a depth greater than the final design depth of the monitoring well, either for exploratory purposes or by error. Boreholes that are not sealed below the final design depth (whether collapsed or left open) may create a vertical conduit for preferential flow. Purging and sampling of the completed well may bring up a non-representative volume of water from below the screen. Therefore, boreholes should be backfilled with a low-permeability material (e.g., a cement-bentonite grout mixture) to the design depth. In highly permeable formations, where vertical preferential flow is less critical, sand may be used in place of the grout seal to stabilize the hole to the design depth.

2.2 Stratigraphic Control

Adequate stratigraphic control is critical to the geologic investigation. Cal EPA recommends that every borehole should be continuously sampled. When continuous sampling of every borehole is not feasible, selected boreholes should be continuously sampled; their number and locations should be chosen to provide representative coverage of site geology and areas of interest to the study. For boreholes that are not continuously sampled, Cal EPA recommends that samples be collected at all suspected changes in lithology. For boreholes that will be completed as monitoring wells, at least one sample should be collected from the interval that will contain the monitoring well intake (i.e., the screened or open (uncased) interval).

Borehole samples should be classified according to their lithology or pedology. Care should be taken to ensure that samples of every geologic formation, especially all confining layers, are collected, and that the nature of stratigraphic contacts is determined.

The RP should prepare stratigraphic cross-sections, both in the direction of ground-water flow and orthogonal to ground-water flow. The number and locations of the cross-sections should be sufficient to illustrate the geologic and hydrogeologic features that may influence contaminant transport. Cross-sections should be based on both the monitoring well boring logs and the boring logs from the subsurface boring program. Site stratigraphy represented on the cross-sections should be compared against known regional stratigraphy to verify the well/boring logs and to prepare an analysis of site-specific stratigraphy. Cal EPA recommends that in complex geologic settings borehole geophysical logging, surface geophysical surveys, and/or cone penetrometer surveys be performed both to verify the logs of cuttings or samples and to assist in establishing stratigraphic control. When planning such surveys it is important to remember that drilling methods and well casings/screens will influence the selection of geophysical methods (e.g., electrical resistivity logging cannot be performed in cased wells).

2.3 Driven Wells

Driven wells consist of a steel well screen that is either welded or attached with drive couplings to a steel casing. The well screen and attached casing are forced into the ground by hand using a weighted drive sleeve, or with a heavy drive head mounted on a hoist. As the well is driven, new sections of casing are attached to the well in 4- or 5-foot sections.

Several problems are commonly associated with the installation of driven wells. First, it is very difficult or impossible to drive a well through dense silts, clays or materials containing boulders. If penetration in these materials is accomplished, the well screen may be destroyed in the process. In addition, silts and/or clays can clog the well screen to the point where the well cannot be satisfactorily developed. Two techniques, described in Aller et al. (1989) have been employed to attempt to alleviate these problems. Driven wells may be helpful as a tool for preliminary field studies requiring installation of shallow piezometers. However, in most cases, Cal EPA discourages the sole use of the driven well construction method for the purpose of installing monitoring wells. This is primarily because of the inability to collect representative samples of the materials that are penetrated during well installation, and the inability to seal the well properly unless an outer casing is driven first. However, if samplers can be driven in advance of the casing to allow subsurface sample collection, the driven well method may be a viable well installation option.

2.4 Well Casing and Screen Materials

Figure 1 is a drawing of a typical monitoring well. A casing and well screen are used to construct a ground-water monitoring well for several reasons: to provide access from the surface of the ground to some point in the subsurface, to prevent borehole collapse, to permit ground-water level measurements and ground-water sampling, and (for casing) to prevent hydraulic communication between separate water-bearing zones within the subsurface.

Access to the monitored zone is through the casing and into either an open borehole or the screened intake.

Monitoring well casing and screen materials should meet the following requirements:

- Monitoring well casing and screen materials should maintain their structural integrity and durability in the environment in which they are used over their operating life. Monitoring well casings and screens should be resistant to chemical and microbiological corrosion and degradation in contaminated and uncontaminated waters. Monitoring well casings and screens should be able to withstand the physical forces acting upon them during and following their installation, and during their use -- including forces due to suspension in the borehole, grouting, development, purging, pumping, and sampling, and forces exerted on them by the surrounding geologic materials.

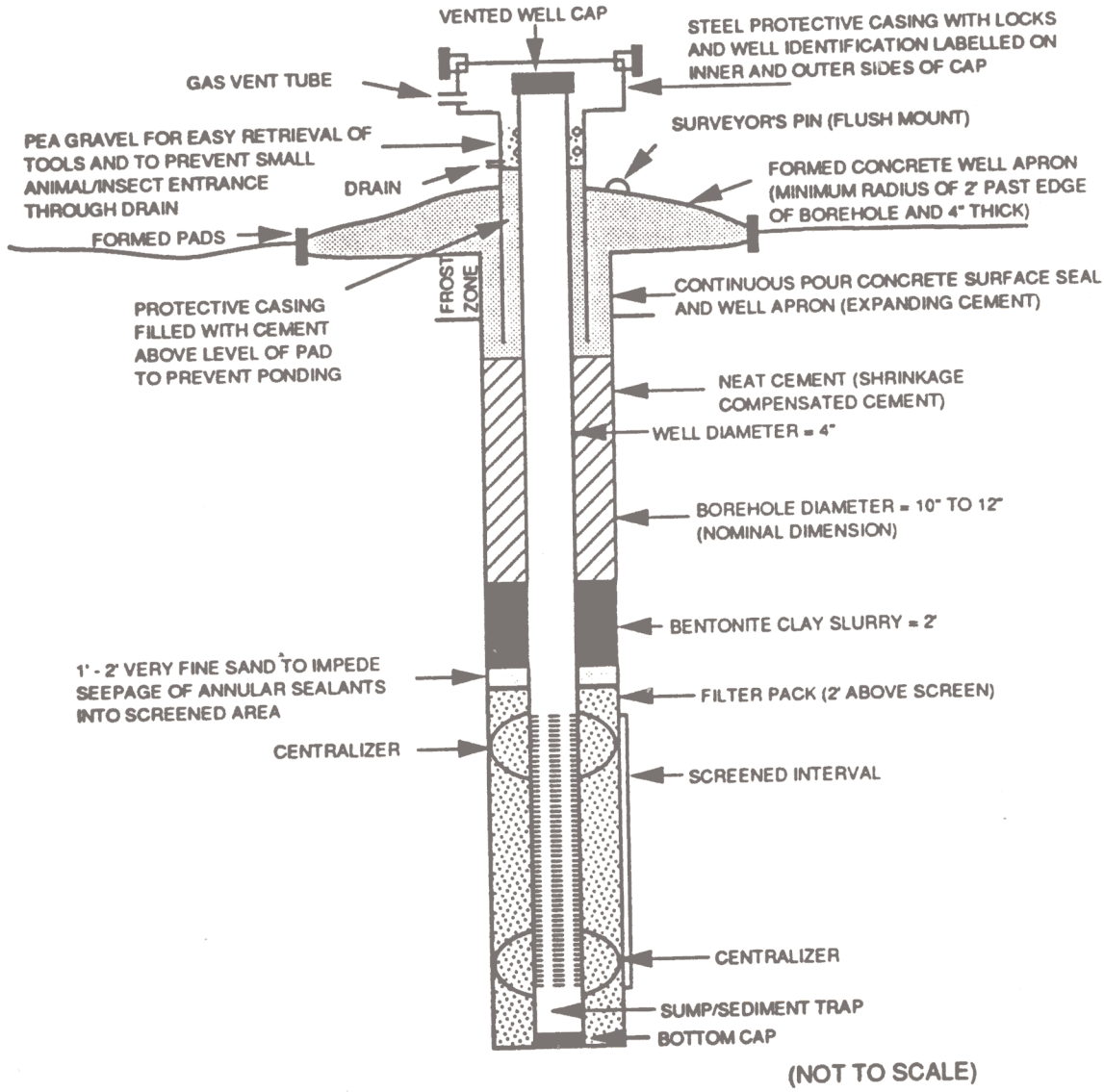

Figure 1. Diagram of a typical monitoring well. From USEPA (1991).

- Monitoring well casing and screen materials should not chemically alter ground-water samples, especially with respect to the analytes of concern, as a result of their sorbing, desorbing, or leaching analytes. For example, if a metal such as chromium is an analyte of interest, the well casing or screen should not increase or decrease the amount of chromium in the ground water. Any material leaching from the casing or screen should not be an analyte of interest, or interfere in the analysis of an analyte of interest.

RP's should also consider the purpose of the well when determining the well's design. Will the well be used solely as a piezometer? Will the well be placed in an area where there is currently no contamination and where natural water quality is not likely to interact with it? Will the well be used to delineate the extent of a plume, but not used to determine compliance with cleanup levels? Will the well be used to extract contaminated ground water as part of remedial action activities? Will the well be used as a "point-of-compliance" well for which accurate information is crucial?

The following discussion of casing and screen materials comes from several sources, but the majority of it is directly from the EPA/EMSL-Las Vegas Handbook of Suggested Practices for the Design and Installation of Ground-Water Monitoring Wells (Aller et al., 1989), with additional information from various references, as cited. Cal EPA believes that the use of this technical guidance, along with the technical criteria provided below, aid in the selection of appropriate well materials. In addition to references cited by Aller et al. (1989) the following references are also available for consideration when choosing well casing and screen materials:

- Cowgill, U.M. 1988. The Chemical Composition of Leachate from a Two-Week Dwell-Time Study of PVC Well Casing and Three-Week Dwell-Time Study of Fiberglass Reinforced Epoxy Well Casing, in A.G. Collins and A.I. Johnson, eds., Ground-Water Contamination: Field Methods, ASTM STP 963, American Society for Testing and Materials, Philadelphia, PA, pp. 172-184.

- Gillham, R.W. and S.F. O'Hannesin. 1990. Sorption of Aromatic Hydrocarbons by Materials Used in Construction of Ground-Water Sampling Wells, in D.M. Nielsen and A.I. Johnson, eds., Ground-Water and Vadose Zone Monitoring, ASTM STP 1053, American Society for Testing and Materials, Philadelphia, PA, pp. 108-122.

- Jones, J.N. and G.D. Miller. 1988. Adsorption of Selected Organic Contaminants onto Possible Well Casing Materials, in A.G. Collins and A.I. Johnson, eds., Ground-Water Contamination: Field Methods, ASTM STP 963, American Society for Testing and Materials, Philadelphia, PA, pp. 185-198.

- Parker, L.V., T.F. Jenkins, and P.B. Black. 1989. Evaluation of Four Well Casing Materials for Monitoring Selected Trace Level Organics in Ground Water. CRREL Report 89-18, U.S. Army Cold Regions Research and Engineering Laboratory, Hanover, NH 03775.

Laboratory studies of the effects of well casing materials on either inorganic or organic dissolved constituents in ground water are still relatively inconclusive and incomplete. These studies have demonstrated the potential for well casing-related alteration of ground-water samples. However, the studies are inconclusive or incomplete and should be viewed as tentative.

Construction materials for piezometers that will be used solely for measuring water levels are not the focus of this section. However, care should be taken to construct piezometers of materials that will not degrade or react with contaminated ground water.

2.4.1 General Casing and Screen Material Characteristics

Historically, most well casings and screens were produced predominantly for water supply wells, and the selection of a well casing or screen material focused on structural strength, durability in long-term exposure to natural ground-water environments, and ease of handling. The selection of appropriate materials for monitoring well casings and screens should consider several site-specific factors including:

- Geologic environment,
- Geochemical environment (both soil and ground water),
- Anticipated well depth,
- Types and concentrations of suspected contaminants,
- Design life of the monitoring well, and
- Its potential to be brought into service for injection or extraction.

Some of these criteria are summarized in Table 1. In any case, the determination of these characteristics requires an adequate site investigation.

Cal EPA discourages the practice of selecting well construction materials based on historical preference, unless supporting scientific studies or field data collected from facilities located in similar hydrogeologic settings and with similar wastes justify the preference. Investigators may need to use combinations of screen and casing materials (either as a composite or independently) in a ground-water monitoring network, depending upon what constituents the wells will sample. Further, the owner or operator may need to conduct site-specific comparative performance studies to justify their preference for a particular well casing or screening material.

The most frequently evaluated characteristics that directly influence the performance of casing and screen materials in ground-water monitoring applications are:

- Strength, and
- Chemical resistance/interference.

These characteristics are discussed in more detail below.

Do Not Use:	Use:
1. PTFE if well depth exceeds 225-375' (68.6-114m).	PVC, ABS, SS.
2. PVC or ABS if well depth exceeds 1200-2000' (366-610m).	SS.
3. SS if pH < 7.0.	PVC, ABS, or PTFE.
4. SS if D.O. > 2 ppm.	PVC, ABS, or PTFE.
5. SS if $H_2S \geq 1$ ppm.	PVC, ABS, or PTFE.
6. SS if T.D.S. > 1000 ppm.	PVC, ABS, or PTFE.
7. SS if CO_2 > 50 ppm.	PVC, ABS, or PTFE.
8. SS if Cl^- > 500 ppm.	PVC, ABS, or PTFE.
9. PVC if a neat PVC solvent/softening agent* is present or if the aqueous concentration of the PVC solvent/softening agent exceeds 0.25 times its solubility in water.	SS, PTFE.
10. Solvent bonded joints for PVC casings.	Threaded PVC casings.
11. Welded stainless joints.	Threaded SS casings.
12. Any PVC well casing that is not NSF-ASTM approved – D-1785 and F-480.	ASTM-NSF approved PVC well casings – D-1785 and F-480.
13. Any stainless steel casing that is not ASTM approved – A312.	ASTM approved SS 304 and SS 316 casings – A312.
14. Any ABS well casing that is not ASTM approved.	ASTM approved ABS casings – F-480.

*Known PVC solvents/softening agents include:

Tetrahydrofuran, cyclohexane, methyl ethyl ketone, methyl isobutyl ketone, methylene chloride, trichloromethane, 1,1-dichloroethane, 1,1,1-trichloroethane, trichloroethylene, benzene, toluene, acetone, and tetrachloroethylene.

Table 1. General recommendations for selection of well casing and screen materials. From USEPA (1991).

Strength-Related Characteristics

Well casing and screen materials should maintain their structural integrity and durability in the environment that they are used over their operating life. Monitoring well casings and screens should be able to withstand the physical forces acting upon them during and following their installation, and during their use, including forces due to suspension in the borehole, grouting, development, purging, pumping, sampling, and forces exerted on them by the surrounding geologic materials. When casing strength is evaluated, three separate yet related parameters should be evaluated:

- Tensile strength,
- Compressive strength, and
- Collapse strength.

Comparative strengths of well casing materials are presented in Table 2.

The tensile strength of a material is defined as the greatest longitudinal stress the material can bear without pulling the material apart. Tensile strength of the installed casing varies with composition, manufacturing technique, joint type and casing dimensions. For monitoring wells, the selected casing and screen materials should have a tensile strength capable of supporting the weight of the casing string when suspended from the surface in an air-filled borehole. The tensile strength of the casing joints is equally as important as the tensile strength of the casing. Because the joint is generally the weakest point in a casing string, the joint strength will determine the maximum axial load that can be placed on the casing. By dividing the tensile strength by the linear weight of casing, the maximum theoretical depth to which a dry string of casing can be suspended in a borehole can be calculated. When the casing is in a borehole partially filled with water, the buoyant force of the water increases the length of casing that can be suspended. The additional length of casing that can be suspended depends on the specific gravity of the casing material.

The compressive strength of a material is defined as the greatest compressive stress that a substance can bear without deformation. Unsupported casing has a much lower compressive strength than installed casing that has been properly grouted and/or backfilled, because vertical forces are greatly diminished by soil friction. This friction component means that the casing material properties are more significant to compressive strength than wall thickness. Casing failure due to compressive strength limitation is generally not an important factor in a properly installed monitoring well.

As important as tensile strength is the final strength-related property considered in casing and screen selection -- collapse strength. Collapse strength is defined as the capability of a casing to resist collapse by any and all external loads to which it is subjected both during and after installation.

Material	Casing Tensile Strength (lb)		Casing Collapse Strength (lb/in^2)	
	2-in. nominal	4-in. nominal	2-in. nominal	4-in. nominal
Polyvinylchloride (PVC)	7,500	22,000	307	158
PVC casing joint[b]	2,800	6,050	300	150
Stainless steel (SS)[c]	37,760	92,000	896	315
SS casing joint[b]	15,900	81,750	No data	No data
Polytetrafluoroethylene (PTFE)	3,800	No data	No data	No data
PTFE casing joints[b]	540	1,890	No data	No data
Epoxy fiberglass	22,600	56,500	330	250
Epoxy casing joints[d]	14,000	30,000	230	150
Acrylonitrile-butadiene-styrene (ABS)	8,830	22,000	No data	No data
ABS casing joints[d]	3,360	5,600	No data	No data

[a]Information provided by E. I. du Pont de Nemours & Company, Wilmington, DE.

[b]All joints are flush-threaded.

[c]Stainless steel casing materials are Schedule 5 with Schedule 40 joints; other casing materials (PVC, PTFE, epoxy, ABS) are Schedule 40.

[d]Joints are not flush-threaded, but are a special type that is thicker than Schedule 40.

Table 2. Comparative strengths of well casing materials. From USEPA (1991).

The resistance of casing to collapse is determined primarily by outside diameter and wall thickness. Casing collapse strength is proportional to the cube of the wall thickness. Therefore, a small increase in wall thickness provides a substantial increase in collapse strength. Collapse strength is also influenced by other physical properties of the casing material including stiffness and yield strength.

Casings and screens are most susceptible to collapse during installation before placement of the filter pack or annular seal materials around the casing. Although the casing may collapse during development, once a casing is properly installed, collapse is seldom a concern (National Water Well Association and Plastic Pipe Institute, 1981). External loadings on casing that may contribute to collapse include:

- Net external hydrostatic pressure produced when the static water level outside of the casing is higher than the water level on the inside;
- Unsymmetrical loads resulting from uneven placement of backfill and/or filter pack materials;
- Uneven collapse of unstable formations;
- Sudden release of backfill materials that have temporarily bridged in the annulus;
- Weight of cement grout slurry and impact of heat of hydration of grout on the outside of a partially water-filled casing;
- Extreme drawdown inside the casing caused by overpumping;
- Forces associated with well development that produce large differential pressures on the casing; and
- Forces associated with improper installation procedures where unusual force is used either to counteract a borehole that is not straight or to overcome buoyant forces.

Of these stresses, only external hydrostatic pressure can be predicted and calculated with accuracy; the others can be avoided by common sense and good practice. To provide a sufficient margin against possible collapse by all normally-anticipated external loadings, a casing should be selected so that resistance to collapse is more than required to withstand external hydrostatic pressure alone. According to Purdin (1980), steps to minimize the possibility of collapse include:

- Drilling a straight, clean borehole;
- Uniformly distributing the filter pack materials at a slow, even rate;
- Avoiding the use of quick-setting (high temperature) cements for thermoplastic casing installation;

- Adding sand to a cement to lower the heat of hydration; and
- Controlling negative pressures inside the well during development.

Chemical Resistance Characteristics

Monitoring well casing and screen materials should maintain their structural integrity and durability in the environment in which they are used over their operating life. Monitoring well casings and screens should be resistant to chemical and microbiological corrosion and degradation in contaminated and uncontaminated waters. Metallic casing and screen materials are most subject to corrosion; thermoplastic casing and screen materials are most subject to chemical degradation. The extent to which these processes occur depends on water quality within the formation and changing chemical conditions such as fluctuations between oxidizing and reducing conditions. Casing materials should be chosen with a knowledge of existing and anticipated ground-water chemistry. Because subsurface conditions cannot be predicted without some preliminary sampling and analysis, the choice of appropriate well casing materials should be contingent upon preliminary water quality analyses, which will be critical to the success of a ground-water monitoring program. When anticipated water quality is unknown, it is prudent initially to use conservative materials (i.e., the most chemically inert). The "Chemical Resistance Chart" presented in the most recent catalog of the Cole-Parmer Instrument Company of Chicago may provide general information regarding the resistance of various well materials to corrosion, although this chart is presumably reporting the effects of reagent grade chemicals on the various materials.

Chemical Interference Characteristics

Monitoring well casing and screen materials should not chemically alter ground-water samples, especially with respect to the analytes of concern, as a result of their sorbing, desorbing, or leaching analytes. If a casing material sorbs selected constituents from the ground water, those constituents either will not be present in any water quality sample or the concentration of constituents could potentially be reduced. Additionally, if ground-water chemistry changes over time, the chemical constituents that were previously sorbed onto the casing may begin to desorb and/or leach into the ground water. In either situation, the water-quality samples are not representative.

Sorptive solute-removal processes by interaction with casing materials or filter packs may reduce actual constituent concentrations below quantitation limits or regulatory thresholds, resulting in biased contaminant plume delineations, reduced sensitivity of detection, or false-negative assessments of ground-water contamination (Palmer et al., 1987). Proper well purging may minimize the impact of sorption or leaching effects; however, purging efficiency is difficult to document. Effective purging may rarely be achieved if bailers are used. The effectiveness of purging in minimizing sorption or leaching effects of well materials will be dependent on the relative rates and magnitudes of these processes in the borehole, filter pack, wells, and the actual time of sample exposure to the materials.

In the presence of chemically reactive aqueous solutions, certain chemical constituents can be leached from casing materials. If this occurs, chemical constituents that are not indicative of formation water quality may be detected

in samples collected from the well. This phenomenon might be considered an indication of possible contamination when the constituents do not relate to ground-water contamination per se, but rather to water sample contamination contributed by the well casing material. The selection of a casing material should therefore consider potential interactions between the casing material and the natural and human-induced geochemical environment. A simplified selection process to minimize chemical interaction with well casings and screens is presented in Table 3.

With respect to well casings, there have been relatively few systematic studies of sorption and leaching, other than well-documented reports describing the persistent effects of PVC solvent cements (Sosebee et al., 1983) and the problems with corrosion of ferrous casings.

2.4.2 Types of Casing Materials

Casing materials widely available for use in ground-water monitoring wells can be divided into three categories:

1) Fluoropolymer materials, including polytetrafluoroethylene (PTFE), tetrafluoroethylene (TFE), fluorinated ethylene propylene (FEP), perfluoroalkoxy (PFA), and polyvinylidene fluoride (PVDF);

2) Metallic materials, including carbon steel, low-carbon steel, galvanized steel, and stainless steel (304 and 316); and

3) Thermoplastic materials, including polyvinyl chloride (PVC) and acrylonitrile butadiene styrene (ABS).

In addition to these three categories that are widely used, fiberglass-reinforced plastic (FRP) has been used for monitoring applications. Because FRP has not yet been used in general application across the country, very little data are available on their characteristics and performance. Therefore, fiberglass-reinforced materials are not included in the following discussion.

All well construction materials possess strength-related characteristics and chemical resistance/chemical interference characteristics that influence their performance in site-specific hydrogeologic and contaminant-related monitoring situations. The characteristics for each of the three categories of materials are discussed below.

If Monitoring for:	Best Choices: 1st Choice	Best Choices: 2nd Choice	Avoid If Possible
Metals	PTFE	PVC	SS 304 & SS 316+
Organics	SS 304 & SS 316	PVC	Galvanized steel and PTFE
Metals & Organics	None	PVC & PTFE	SS 304 & SS 316

* Do not use PTFE for monitoring tetrachloroethylene. PTFE tends to be more sorptive of organics than PVC. Hydrophobic organics (Log Kow ≥ ~2) are most readily sorbed.

+ Substantial concentrations of metals can be leached from SS if the contact time is 2 hours or longer.

Table 3. Recommendations regarding chemical interactions with well casings. From USEPA (1991).

Fluoropolymer Materials

Fluoropolymers are synthetic materials consisting of different formulations of monomers (organic molecules) that can be molded by powder metallurgy techniques or extruded while heated. Fluoropolymers are technically included among the thermoplastics, but possess a unique set of properties that distinguish them from other thermoplastics: fluoropolymers are resistant to chemical and biological attack, oxidation, weathering and ultraviolet radiation; they have a broad useful temperature range (up to 550°F) and a high dielectric constant; they exhibit a low coefficient of friction; they have anti-stick properties; and they possess a greater coefficient of thermal expansion than most other plastics and metals.

A variety of fluoropolymer materials are marketed under a number of different trademarks. Polytetrafluoroethylene (PTFE) was discovered by E. I. Du Pont de Nemours in 1938. PTFE's properties include an extreme temperature range (from -400°F to +550°F in constant service) and the lowest coefficient of friction of any solid material (Hamilton, 1985). PTFE is by far the most widely-used and produced fluoropolymer. Fluorinated ethylene propylene (FEP) was also developed by E. I. Du Pont de Nemours and is perhaps the second most widely used fluoropolymer. It duplicates nearly all of the physical properties of PTFE except the upper temperature range, which is 100°F lower. Production of FEP-finished products is generally faster because FEP is melt-processible, but raw material costs are higher. Perfluoroalkoxy (PFA) combines the best properties of PTFE and FEP, but PFA costs substantially more than either PTFE or FEP. Polyvinylidene fluoride (PVDF) is tougher and has a higher abrasion resistance than other fluoropolymers, and is resistant to radioactive environments. PVDF also has a lower maximum temperature limit than either PTFE or PFA.

Care should be exercised in the use of trade names to identify fluoropolymers. Some manufacturers use one trade name to refer to several of their own different materials. For example, Du Pont refers to several of its fluorocarbon resins as TEFLON^{R}, although the actual products have different physical properties and different fabricating techniques. These materials may not always be interchangeable in service or performance.

Aller et al. (1989) provide an excellent summary of the research on PTFE materials performed by Hamilton (1985), Reynolds and Gillham (1985), Barcelona et al. (1985a), Lang et al. (1989), Dablow et al. (1988), and Barcelona et al. (1985b). The following advantages and disadvantages of PTFE are highlighted in Aller et al.'s (1989) summary and by Nielsen (1991). Advantages of PTFE well casing and screen materials:

- Can be used under a wide range of temperatures; and
- Fairly easily machined, molded or extruded.

Disadvantages of PTFE well casing and screen materials:

- May adsorb/desorb organic constituents from/into solution;

- Only slotted casing is available for screens;
- Ductile behavior of PTFE ("creep" or "cold flow") may result in the partial closing of well intake openings (i.e., screen slots);
- PTFE's extreme flexibility may result in non-plumb and bowed wells;
- Non-stick nature of PTFE may cause annular seal failure;
- Moderate weight and low strength per unit length; and
- PTFE casing and screen is unsuitable for driven wells.

Structural strength of screen materials is primarily a problem only with PTFE screen materials, which are affected by a phenomenon known as "creep" or "cold flow". Under constant stress through time, such as continuous loading of the entire length of casing, PTFE can deform plastically (i.e., it retains the deformed shape after the stress is removed), and in screened casings made of PTFE, the result can be partial or complete closure of the slots, thus effectively ruining the well's usefulness for monitoring purposes. This is a problem, however, only when the wells are relatively deep (250 feet or deeper); in shallow wells the physical resistance of PTFE to compression is greater than is its tendency to deform plastically (Du Pont, reference 1).

If PTFE is to be used in deeper wells, structural strength problems can be avoided by using slightly larger slots; larger slots may be narrowed slightly because of cold flow, however they will not be completely sealed shut. It may also be possible to obtain PTFE casing that has been modified by the use of fillers. Fillers can be used to increase the resistance to cold flow by approximately a factor of 2 (Du Pont, reference 1), thus limiting the deformation that will occur in the screened casing. More information about "cold flow" phenomena is available from the manufacturer (Du Pont, reference 2).

Metallic Materials

Metallic well casing and screen materials available for use in monitoring wells include carbon steel, low carbon steel, galvanized steel, and stainless steel. Well casings and screens made of any of these metallic materials are generally stronger, more rigid and less temperature sensitive than thermoplastics, fluoropolymer, or fiberglass-reinforced epoxy casing materials. The strength and rigidity of metallic casing materials are sufficient to withstand virtually any subsurface condition encountered in a ground-water monitoring situation, but metallic materials may be subject to corrosion during long-term exposure in certain subsurface geochemical environments.

Corrosion is defined as the weakening or destruction of a material by chemical action. Corrosion of metallic well casings and well intakes can both limit the useful life of the monitoring well installation and result in

ground-water sample analytical bias. It is important, therefore, to select both casing and screen that are made from corrosion-resistant materials.

Several well-defined forms of corrosive attack on metallic materials have been observed and defined. In all forms, corrosion proceeds by electrochemical action, and water in contact with the metal is an essential factor. According to Driscoll (1986), the forms of corrosion typical in environments where well casing and well intake materials are installed include:

1) General oxidation or "rusting" of the metallic surface, resulting in uniform destruction of the surface with occasional perforation in some areas;

2) Selective corrosion (dezincification) or loss of one element of an alloy, leaving a structurally weakened material;

3) Bi-metallic corrosion, caused by the creation of a galvanic cell at or near the juncture of two different metals;

4) Pitting corrosion, or highly localized corrosion by pitting or perforation, with little loss of metal outside of these areas; and

5) Stress corrosion, or corrosion induced in areas where the metal is highly stressed.

To determine the potential for corrosion of metallic materials, the natural geochemical conditions should first be determined. The following list of indicators can help recognize potentially corrosive conditions (modified from Driscoll, 1986):

1) Low pH -- if ground-water pH is less than 7.0, water is acidic and corrosive conditions exist;

2) High dissolved oxygen content -- if dissolved oxygen content exceeds 2 milligrams per liter, corrosive water is indicated;

3) Presence of hydrogen sulfide (H_2S) -- presence of H_2S in quantities as low as 1 milligram per liter can cause severe corrosion;

4) Total dissolved solids (TDS) -- if TDS is greater than 1000 milligrams per liter, the electrical conductivity of the water is great enough to cause serious electrolytic corrosion;

5) Carbon dioxide (CO_2) -- corrosion is likely if the CO_2 content of the water exceeds 50 milligrams per liter; and

6) Chloride (Cl^-), bromide (Br^-), and fluoride (F^-) content -- if the Cl^-, Br^-, and F concentrations together exceed 500 milligrams per liter, corrosion can be expected.

Combinations of any of these corrosive conditions generally increase the corrosive effect.

Carbon steels were produced primarily to provide increased resistance to atmospheric corrosion. Achieving this increased resistance requires that the material be subjected to alternately wet and dry conditions. In most monitoring wells, water fluctuations are not sufficient in either duration or occurrence to provide the conditions that minimize corrosion. Therefore, the difference between the corrosion resistance of carbon and low-carbon steels in the unsaturated or in the saturated zone is negligible, and both materials may be expected to corrode approximately equally.

Corrosion products of carbon and low-carbon steel include iron, manganese, and trace metal oxides as well as various metal sulfides (Barcelona et al., 1983). Under oxidizing conditions, the principal products are solid hydrous metal oxides; under reducing conditions, high concentrations of dissolved metallic corrosion products can be expected (Barcelona et al., 1983). While the electroplating process of galvanizing improves the corrosion resistance of either carbon or low-carbon steel, in many subsurface environments the improvement is only slight and short-term. The products of corrosion of galvanized steel include iron, manganese, zinc and traces of cadmium (Barcelona et al., 1983).

The surfaces where corrosion occurs present potential sites for a variety of chemical reactions and adsorption. These surface interactions can cause significant changes in dissolved metal or organic compounds in ground-water samples (Marsh and Lloyd, 1980). According to Barcelona et al. (1983), even purging the well prior to sampling may not be sufficient to minimize this source of sample bias because the effects of the disturbance of surface coatings or accumulated corrosion products in the bottom of the well are difficult, if not impossible, to predict. On the basis of these observations, the use of carbon steel, low-carbon steel, and galvanized steel in monitoring well construction is not recommended in most natural geochemical environments.

Conversely, stainless steel performs well in most corrosive environments, particularly under oxidizing conditions. In fact, stainless steel requires exposure to oxygen to attain its highest corrosion resistance; oxygen combines with part of the stainless steel alloy to form an invisible protective film on the surface of the metal. As long as the film remains intact, the corrosion resistance of stainless steel is high. However, long-term exposure of stainless steel to corrosive conditions may result in corrosion and the subsequent contamination of ground water samples by chromium or nickel. Recent work by Barcelona and Helfrich (1986; 1988) and Barcelona et al. (1988a) suggests that biological activity may alter geochemistry near stainless steel wells. Iron bacteria may induce degradation of the well casing and screen.

Several different types of stainless steel alloys are available. The most common alloys used for well casing and screen are Type 304 and Type 316. Type 304 stainless steel is perhaps the most practical from a corrosion resistance and cost standpoint. It is composed of slightly

more than 18 percent iron and not more than 0.08 percent carbon (Driscoll, 1986). Chromium and nickel give the 304 alloy excellent resistance to corrosion; the low carbon content improves weldability. Type 316 stainless steel is compositionally similar to Type 304 with one exception -- type 316 has a 2 to 3 percent molybdenum content and a higher nickel content that replaces the equivalent percentage of iron. This compositional difference provides Type 316 stainless steel with an improved resistance to sulfur-containing compounds and sulfuric acid solutions (Barcelona et al., 1983). Type 316 generally performs better than Type 304 under reducing conditions. According to Barcelona et al. (1983), Type 316 stainless steel is less susceptible to pitting or pinhole corrosion caused by organic acids or halide solutions.

The following advantages and disadvantages of stainless steel are highlighted by Aller et al. (1989) and by Nielsen (1991):

Advantages of stainless steel well casing and screen materials:

- High strength in wide range of temperatures;
- Readily available;
- High open area screens available; and
- Suitable for driven wells.

Disadvantages of stainless steel well casing and screen materials:

- May corrode under some geochemical and microbiological conditions;
- May contribute metal ions (iron, chromium, nickel, manganese) to ground-water samples; and
- High weight per unit length.

Thermoplastic Materials

Thermoplastics are man-made materials that are composed of different formulations of large organic molecules. These formulations soften by heating and harden upon cooling, and therefore, can be easily molded or extruded into a wide variety of useful shapes including well casings, screens, fittings and accessories. The most common types of thermoplastic well casing and screen are polyvinyl chloride (PVC) and acrylonitrile butadiene styrene (ABS).

PVC plastics are produced by combining PVC resin with various types of stabilizers, lubricants, pigments, fillers, plasticizers and processing aids. The amounts of these additives can be varied to produce different PVC plastics with properties tailored to specific applications.

PVC materials are classified according to ASTM standard specification D-1785 that covers rigid PVC compounds (ASTM, 1986). This standard categorizes rigid PVC by numbered cells designating value ranges for certain pertinent properties and characteristics, including: impact strength, tensile strength, rigidity (modulus of elasticity), temperature resistance (deflection temperature), and chemical resistance. ASTM standard specification F-480 covers thermoplastic water well casing pipe and couplings made in standard dimension ratios. This standard specifies that PVC well casing can be made from only a limited number of cell classification materials, predominantly PVC 12454-B, but also including PVC 12454-C and PVC 14333-C and D (American Society for Testing and Materials, 1981).

ABS plastics are produced from three different monomers: 1) acrylonitrile, 2) butadiene and 3) styrene. The ratio of the components and the way that they are combined can be varied to produce plastics with a wide range of properties. Acrylonitrile contributes rigidity, impact strength, hardness, chemical resistance and heat resistance; butadiene contributes impact strength; styrene contributes rigidity, gloss and ease of manufacturing (National Water Well Association and Plastic Pipe Institute, 1981). The ABS used for well casing is a rigid, strong unplasticized polymer formulation that has good heat resistance and impact strength.

Two ABS material types are used for well casings: 1) a higher strength, high rigidity, moderate impact resistance ABS and 2) a lower strength and rigidity, high impact strength ABS. These two materials are identified as cell class 434 and 533, respectively, by ASTM standard specification F-480 (American Society for Testing and Materials, 1981). High temperature resistance and the ability of ABS to better retain other properties at high temperatures are advantages in wells where grouting with cement results in high temperature caused by the cement's heat of hydration.

Aller et al. (1989) describe some of the research that has been performed regarding degradation of thermoplastic materials and the adsorption/desorption of contaminants onto/from various thermoplastic materials. The potential sources of chemical interference from thermoplastic well casing materials, either from desorption or chemical degradation, are 1) the basic monomers from which the casing is made (e.g., vinyl chloride monomer), and 2) a variety of additives that may be used in the manufacture of the casing including: plasticizers, stabilizers (e.g., PVC heat stabilizing compounds such as dimethyl tin and dibutyl tin), fillers, pigments and lubricants. The significance and impact of these sources of chemical interference is not currently known, and may vary based on site-specific conditions. With respect to chemical interference effects, Aller et al. (1989) explain that another potential area of concern is the possibility that some chemicals could be sorbed by PVC well casing materials. Studies regarding sorption of chemical species onto PVC are inconclusive with respect to both the significance of contaminant sorption by PVC and the ability of well purging to correct any sample interferences.

The following advantages and disadvantages of PVC materials are highlighted in Aller et al.'s (1989) discussion and by Nielsen (1991).

Advantages of PVC well casing and screen materials:

- Completely resistant to galvanic and electrochemical corrosion;
- Light weight for ease of installation;
- High abrasion resistance;
- Requires low maintenance;
- Flexible and workable for ease of cutting and joining;
- High strength and low weight per unit length;
- Readily available; and
- High open area screens available.

Disadvantages of PVC well casing and screen materials:

- May degrade in high concentrations of certain organic solvents, especially low molecular weight ketones, amines, aldehydes, and chlorinated alkenes and alkanes (Barcelona et al., 1983 and the Science Advisory Board of the USEPA);
- May fail if subjected to high differential pressures (i.e., during surging); weaker and less rigid than metallic casing materials;
- May fail if subjected to high temperatures (i.e., during grouting with neat cement);
- Long-term exposures of some formulations of thermoplastics to the ultraviolet rays of direct sunlight (above-ground portions of casings) and/or to low temperatures may cause brittleness and gradual loss of impact strength that may be significant; and
- Unsuitable for driven wells.

The National Sanitation Foundation (NSF) has set specifications for certain chemical constituents in PVC formulations. The purpose of these specifications as outlined in NSF Standard 14 (National Sanitation Foundation, 1988) is to control the amount of chemical additives in both PVC well casing and pipe used for potable water supply. Most of the maximum contaminant levels correspond to those set by the Safe Drinking Water Act for chemical constituents covered by the national Interim Primary Drinking Water Standards. Only PVC products that carry either the "NSF wc" (well

casing) or "NSF pw" (potable water) designation have met the specifications set forth in Standard 14. Other non-NSF listed products may contain chemical additives not addressed by the specifications, or may contain concentrations of the listed chemicals that are higher than permitted by the specifications. In all cases, the material used should have been demonstrated to be compatible with the specific applications. For example, even though neither lead nor cadmium has been permitted as a compounding ingredient in United States- manufactured NSF-listed PVC well casing since 1970, PVC manufactured in other countries may be stabilized with lead or cadmium compounds that may leach from the PVC (Barcelona et al., 1983).

Composite Alternative Materials

In certain conditions it may be advantageous to design a well using more than one material for well components. For example, where stainless steel or fluoropolymer materials are preferred in a specific chemical environment, costs may be saved by using PVC in non-critical portions of the well. These savings may be considerable, especially in deep wells where only the lower portion of the well has a critical chemical environment and tens of feet of lower-cost PVC may be used in the upper portion of the well. In a composite well design, dissimilar metallic components should not be used unless an electrically isolating design is incorporated (i.e., a dielectric coupling) (United States Environmental Protection Agency, 1986).

2.4.3 Well Casing Diameter

While casing outside diameters are standardized, variations in wall thickness cause casing inside diameters to vary. In "scheduled" casing, wall thickness increases as the scheduling number increases for any given diameter of casing. Nominal 2-inch casing is a standard 2.375 inches outside diameter; wall thicknesses vary from 0.065 inch for schedule 5 to 0.218 inch for schedule 80. This means that inside diameters for nominal 2-inch casing vary from 2.245 inches for schedule 5 thin-walled casing (typical of stainless steel) to only 1.939 inches for schedule 80 thick-walled casing (typical of PVC). Wall thickness also changes with pipe diameter in scheduling. Because schedule 80 PVC is thicker than schedule 40 PVC, schedule 80 PVC wells will extend the life of the monitoring system compared to schedule 40 PVC.

A method of evaluating casing strength is by standard dimension ratios (SDR). An SDR is the ratio of the wall thickness to the casing diameter. The ratio is referenced to the internal pounds per square inch (psi) pressure rating such that all casings with a similar SDR will have a similar psi rating. Where strength of casing is important, scheduling and SDR numbers provide a means for choosing casing.

Although the diameter of the casing for a monitoring well depends on the purpose of the well, the casing size is generally selected to accommodate downhole equipment. Additional casing diameter selection criteria include: 1) drilling or well installation method used, 2) anticipated depth of the well and associated strength requirements 3) anticipated method of well development,

4) volume of water required to be purged prior to sampling, 5) rate of recovery of the well after purging, and 6) anticipated aquifer testing.

To minimize the volume of contaminated water that must be purged before sampling, Cal EPA recommends the use of either 2-inch or 4-inch diameter wells whenever practical (generally to depths less than 200 feet). The use of larger diameter wells may be necessary where dedicated purging or sampling equipment is used or where the well is screened in a deep formation. When considering whether to install larger diameter wells, the investigator should recognize that the quantity of contaminated ground water that will require proper disposal and, for some hydrogeologic settings (i.e., zones of low hydraulic conductivity), the time required for well recovery will increase with well diameter.

2.4.4 Casing Cleaning Requirements

Well casing and screen materials should be cleaned prior to installation to remove any coatings or manufacturing residues. Aller et al. (1989) describe the procedures that should be used to clean casing and screen materials. All casing and screen materials should be washed with a mild non-phosphate detergent/potable water solution and rinsed with potable water. Hot pressurized water, such as in steam cleaning, should be used to remove organic solvents, oils or lubricants from casing and screens composed of materials other than plastic. At sites where volatile organic contaminants may be monitored, cleaning of well casing and screen materials should include a final rinse with deionized water or potable water that has not been chlorinated. Once cleaned, casings and screens should be stored in an area that is free of potential contaminants. Plastic sheeting can generally be used to cover the ground in the decontamination area to provide protection from contamination.

2.4.5 Coupling Procedures for Joining Casing

Only a limited number of methods are available for joining lengths of casing or casing and screen together. The joining method depends on the type of casing and type of casing joint. Flush-joint, threaded flush-joint, plain square-end, and bell-end casing joints are typical of joints available for plastic casing; threaded flush-joint, bell-end, and plain square-end casing joints are typical of joints available for metallic casing.

<u>Metallic Casing Joining</u>

There are generally two options available for joining metallic well casings: 1) welding via application of heat or 2) threaded joints. Both methods produce a casing string with a relatively smooth inner and outer diameter. With welding, it is possible to produce joints that are as strong or stronger than the casing, thereby enhancing the tensile strength of the casing string. The disadvantages of welding include: 1) greater assembly time, 2) difficulty in properly welding casing in the vertical position, 3) enhancement of corrosion potential in the vicinity of the weld and 4) danger of ignition of potentially explosive gases that may be present.

Because of the disadvantages of welding, threaded joints are more commonly used with metallic casing and screen. Threaded joints provide inexpensive, fast and convenient connections and greatly reduce potential problems with chemical resistance or interference (due to corrosion) and explosive potential. Wrapping the male threads with fluoropolymer tape prior to joining sections improves the watertightness of the joint. One disadvantage to using threaded joints is that the tensile strength of the casing string is reduced to approximately 70 percent of the casing strength. This reduction in strength does not usually pose a problem because strength requirements for small diameter wells (such as typical monitoring wells) are not as critical and because metallic casing has a high initial tensile strength.

Thermoplastic and Fluoropolymer Casing Joining

The most common method of mechanical joining of thermoplastic and fluoropolymer casing and screen is by threaded connections. Molded and machined threads are available in a variety of thread configurations including: acme, buttress, standard pipe thread, and square threads. Because most manufacturers have their own thread type, threaded casing may not be compatible between manufacturers. If the threads do not match and a joint is made, the joint can fail or leak either during or after casing installation.

Casing with threads machined or molded directly onto the pipe (without use of larger-diameter couplings) provides a flush joint between both inner and outer diameters. Because the annular space is frequently minimal, casings that do not use couplings are best suited for use in monitoring well construction. Joints should create a uniform inner and outer casing diameter in monitoring well installations. An inconsistent inner diameter causes problems when tight-fitting downhole equipment (development tools, sampling or purging devices, etc.) is used; an uneven outer diameter creates problems with filter pack and annular seal placement. The latter problem tends to promote water migration at the casing/seal interface to a greater degree than is experienced with uniform outer diameter casing (Morrison, 1984).

Because all joints in a monitoring well casing should be watertight, the extent to which the joints are tightened should comply with recommendations of the manufacturer. Overtightening casing joints can lead to structural failure of the joint (National Water Well Association and Plastic Pipe Institute, 1981). Where threaded joints are used, fluoropolymer tape may be wrapped around the threads prior to joining male and female sections to maximize the watertightness of the joint, and an O-ring may be added for extra security.

Solvent cementing of thermoplastic pipe should not be used in the construction of ground-water monitoring wells. In solvent cementing, a solvent primer is generally used to clean the two pieces of casing to be joined and a solvent cement is then spread over the cleaned surface areas. The two sections are assembled while the cement is wet. This allows the active solvent agent(s) to penetrate and soften the two casing surfaces that are joined. As the cement cures, the two pieces of casing are fused together; a residue of chemicals from the solvent cement remains at the joint. The cements used in solvent welding, which are themselves organic chemicals,

have been show to adversely affect the integrity of ground-water samples. (See Aller et al., 1989 for a summary of relevant research.)

2.5 Well Intake Design

The RP should design and construct the intakes of monitoring wells to (1) accurately sample the aquifer zone the well is intended to sample; (2) minimize the passage of formation materials (turbidity) into the well; and (3) ensure sufficient structural integrity to prevent the collapse of the intake structure.

2.5.1 Well Screen

The goal of a properly completed monitoring well is to provide low turbidity water that is representative of ground-water quality in the vicinity of the well. Monitoring wells completed in rock often do not require screens, though wells completed in unconsolidated sediments do require screens.

Screen Length

The selection of screen length usually depends on the objective of the well. Piezometers, for example, are generally completed using short screens (2 feet or less), as are wells where only a discrete flow path, such as thin gravel interbedded with clays, is monitored. To avoid dilution, well screens should be kept to the minimum length appropriate for intercepting a contaminant plume, especially in a high-yielding aquifer. The screen length should generally not exceed 10 feet. If construction of a water table well is the objective, either for defining flow gradient or detecting the presence of floating non-aqueous phase liquid (NAPL), then a longer screen spanning the water table is acceptable, to account for NAPL's or seasonal water table fluctuations. The RP should not use screen lengths that create a conduit for contaminant transport across hydraulically separated geologic units.

Screen Slot Size

Well screen slot size should be selected to retain at least 90% of the filter pack material (discussed below) in artificially filter packed wells, or a minimum of 50% of the formation material in naturally packed wells, unless the RP can demonstrate that turbidity-free water (<5 nephelometric turbidity units) can be obtained using a larger slot size. Although this is a higher percentage than is usually required in a production well, the low withdrawal rates and the infrequent use of a monitoring well necessitate the higher percentage exclusion. Cal EPA emphasizes that filtering a sample subsequent to its collection is not the solution for dealing with turbidity in an improperly designed well. Furthermore, well screens should be factory-slotted. Manually slotting casing as a substitute for screens should not be accepted under any conditions.

2.5.2 Filter Packs/Pack Material

The annular space between the borehole wall and the screen or slotted casing should be filled in a manner that minimizes the passage of formation materials

into the well. The driller should generally install an artificial filter pack around each well intake. As discussed above, wells in rock often do not require screens, and thus do not require filter packs. However, they are the exception; most wells will require filter packs and a screened length of casing. Aller et al. (1989) provide a comprehensive discussion of the purpose and selection of filter pack materials.

An artificial filter pack is appropriate in most geologic settings. In particular, an artificial filter pack should be used when: 1) the natural formation is poorly sorted; 2) a long screened interval is required and/or the intake spans highly stratified geologic materials of widely varying grain sizes; 3) the natural formation is a uniform fine sand, silt, or clay, 4) the natural formation is thin-bedded, 5) the natural formation is poorly cemented sandstone, 6) the natural formation is highly fractured or characterized by relatively large solution channels; 6) the natural formation is shales or coals that will act as a constant source of turbidity to ground-water samples; and 7) the diameter of the borehole is significantly greater than the diameter of the screen (Aller et al., 1989). Using natural formation material as filter pack is recommended only when the natural formation materials are well sorted and relatively coarse-grained.

Filter pack material should be chemically inert. The best filter packs are made from industrial grade quartz (Barcelona, 1985a). Any other type of sand should be analyzed for cation exchange capacity and volatile organic compounds (VOCs) to determine whether it will interact with analytes of concern in the ground water. Commercially available pea gravel may be acceptable for use in gravel aquifers; however, because the filter pack should be chemically inert, the pea gravel itself should not be chemically active or coated with a chemically active metal oxide. Filters constructed from fabric should not be allowed, as they tend to plug and may be chemically reactive.

Aller et al. (1989) provide the following summary of methods for selecting the size of filter pack materials:

> "Although design techniques vary, all use the filter pack ratio to establish size differential between the formation materials and filter pack materials. Generally this ratio refers to either the average (50 percent retained) grain size of the formation material or the 70 percent retained size of the formation material. For example, Walker (1974) and Barcelona et al. (1985a [1985b in this document]) recommend using a uniform filter pack grain size that is 3 to 5 times the 50 percent retained size of the formation materials. Driscoll (1986) recommends a more conservative approach by suggesting that for fine-grained formations, the 50 percent retained size of the finest formation sample be multiplied by a factor of 2 to exclude the entrance of fine silts, sands, and clays into the monitoring well. The United States Environmental Protection Agency (1975) recommends that filter pack grain size be selected by multiplying the 70 percent retained grain size of the formation materials by a factor between 4 and 6. A factor of 4 is used if the formation is fine and uniform; a factor of 6 is used if the formation is coarser and non-uniform. In both cases, the uniformity coefficient of the filter pack materials

should not exceed 2.5 and the gradation of the filter material should form a smooth and gradual size distribution when plotted. The actual filter pack used should fall within the area defined by these two curves. According to Williams (1981), in uniform formation materials, either approach to filter pack material sizing will provide similar results; however in coarse, poorly sorted formation materials, the average grain size method may be misleading and should be used with discretion."

Filter pack material should be installed in a manner that prevents bridging and particle-size segregation. Filter pack material installed below the water table should generally be tremied into the annular space. Allowing filter pack material to fall by gravity (free fall) into the annular space is only appropriate when wells are relatively shallow, when the filter pack has a uniform grain size, and when the filter pack material can be poured continuously into the well without stopping.

At least two inches of filter pack material should be installed between the well screen and the borehole wall. The filter pack should extend at least two feet above the top of the well screen. In deep wells the filter pack may not compress when initially installed, consequently, when the annular and surface seals are placed on the filter pack, the filter pack compresses sufficiently to allow grout into, or very close to, the screen. Consequently, filter packs may need to be installed as high as five feet above the screened interval in monitoring wells that are deep (i.e., greater than 200 feet). The precise volume of filter pack material required should be calculated and recorded before placement, and the actual volume used should be determined and recorded during well construction. Any discrepancy between the calculated volume and the actual volume requires an explanation.

Prior to installing the annular seal, a one- to two-foot layer of chemically inert fine sand may be placed over the filter pack to prevent the intrusion of annular or surface sealants into the filter pack. The entire length of the annular space that is filled with filter pack material or sand is effectively the monitored zone. Therefore, if the filter pack or sand extends from the screened zone into an overlying zone, a conduit for the possible transport of contaminants is created between the two zones.

2.6 Annular Sealants

Proper sealing of the well annulus is required, to prevent contamination of samples and the ground water. Adequate sealing will prevent the well annulus from serving as a conduit for contaminant transport. The two most commonly used materials for annular seals are cement and bentonite. To the extent possible, materials used for sealing should be inert to the chemical constituents in the ground water. In general, the permeability of the sealing material should be one to two orders of magnitude lower than the least permeable part of the formation in contact with the well. The estimated volume of sealant required should be calculated and recorded before placement, and the actual volume used should be determined and recorded during well construction. Any discrepancies between the calculated volumes and the actual volumes should be explained. Aller et al. (1989) provide detailed discussions of the proper placement of sealants into the annular space.

When the screened interval is within the saturated zone, a minimum of two feet of sealant material such as raw (>10% solids) bentonite should be placed immediately over the protective sand layer or filter pack. Granular bentonite, bentonite pellets, and bentonite chips may be placed around the casing by means of a tremie pipe in deep wells (greater than about 30 feet deep), or by dropping them directly down the annulus in shallow wells (less than about thirty feet deep). Dropping bentonite pellets down the annulus may cause bridging due to premature hydration of the bentonite, resulting in gaps in the seal below the bridged material. In shallow monitoring wells, a tamping device should be used to prevent bridging from occurring.

A neat cement or shrinkage-compensated cement grout seal should be installed on top of the bentonite seal and extend vertically up the well annulus between the well casing and the borehole to within a few feet of land surface. Annular sealants in slurry form (e.g., cement grout, bentonite slurry) should be placed by the tremie/pump (from the bottom up) method. The bottom of the placement pipe should be equipped with a side discharge deflector to prevent the slurry from jetting a hole through the filter pack. The bentonite seal should be allowed to completely hydrate, set, or cure in conformance with the manufacturer's specifications prior to installing the grout seal in the annular space. The time required for the bentonite seal to completely hydrate, set, or cure will differ with the materials used and the specific conditions encountered, but is generally a minimum of four to twenty-four hours. Allowing the bentonite seal to hydrate, set, or cure prevents the invasion of the more viscous and more chemically reactive grout seal into the screened area.

When using bentonite as an annular sealant, the appropriate clay should be selected on the basis of the environment in which it is to be used, such as the ion-exchange potential of the sediments, sediment permeability, and compatibility with expected contaminants. Sodium bentonite is usually acceptable. Other industrial grade clays without chemical additives that may affect ground-water quality can be used if sodium bentonite is incompatible with either the natural formation or the analytes of concern. For example, calcium bentonite may be more appropriate in calcareous sediments and soils because of its reduced cation exchange capacity. The sealing properties of clays may be adversely affected by high concentrations of chlorine salts, acids, alcohols, ketones, and other polar compounds. If high concentrations of these materials are expected, alternative sealants should be considered.

When the annular sealant must be installed in the unsaturated zone, neat cement or shrinkage-compensated cement may be used for the annular sealant. Bentonite is not recommended as an annular sealant in the unsaturated zone because the moisture available is insufficient to fully hydrate bentonite. Adding calcium bentonite to cement should be avoided. Ca^{++} and OH^{-} ions in the cement cause flocculation of the clay, reducing its ability to swell. The bentonite also weakens the cement, reducing its compressive strength. A better solution for shrinkage control is to use shrinkage-compensating additives components: K, M, and S (ASTM C845). However, the high heat of hydration should be taken into account when these materials are used.

2.7 Surface Completion

The surface completion of monitoring wells is described in detail by Aller et al. (1989). In general, completing a monitoring well will involve installing the following components:

- Surface seal;
- Protective casing, utility vault, or meter box;
- Ventilation hole(s);
- Drain hole(s);
- Cap;
- Lock; and
- Guard posts.

Monitoring wells are commonly completed at the surface in one of two ways: as above-ground completions or as flush-to-ground completions. The purpose of both types of completion are to prevent infiltration of surface runoff into the well annulus and to prevent accidental damage or vandalism of the well.

A monitoring well surface seal should be installed on top of the grout seal and extend vertically up the well annulus between the well casing and the borehole to the land surface. Where appropriate, the lower end of the surface seal should extend at least one foot below the frost line to prevent damage from frost heaving. The composition of the surface seal should be neat cement or concrete. In above-ground well completions, the surface seal should form at least a two-foot wide, four-inch thick neat cement or concrete apron at the land surface. The apron should be constructed with a slight slope to drain surface water radially away from the well casing to prevent leakage down the outer casing wall.

A locking protective casing should be installed around the well casing to prevent damage or unauthorized entry. The protective casing should be anchored below the frost line (where applicable) into the surface seal and extend at least 18 inches above the surface of the ground. A 1/4-inch vent hole pipe is recommended to allow the escape of any potentially explosive gases that may accumulate within the well. In addition, a drain hole should be installed in the protective casing to prevent water from accumulating and, in freezing climates, freezing around the well casing. The space between the protective casing and the well casing may be filled with gravel to allow the retrieval of tools and to prevent small animal/insect entrance through the drain. A suitable cap should be placed on the well to prevent tampering or the entry of any foreign materials. A lock should be installed on the cap to provide security. To prevent corrosion or jamming of the lock, a protective cover should be used. Care should be taken when using lubricants such as graphite or petroleum-based sprays to lubricate the lock, as lubricants may introduce a potential for sample contamination. Locks should not be lubricated on the day the well is sampled, and gloves that are worn while lubricating the lock should be changed prior to initiating other activities at the well.

To guard against accidental damage to the well from facility traffic, the RP should install concrete or steel bumper guards around the edge of the concrete apron. These should be located within 3 or 4 feet of the well and should be painted orange or fitted with reflectors to reduce the possibility of vehicular damage.

The use of flush-to-ground surface completions is sometimes necessary in areas such as roadways, parking lots and gas stations. Where these completions are used, a protective structure such as a utility vault or meter box should be installed around the well casing. Other measures should be taken to prevent the accumulation of surface water in the protective structure, including completing the structure with a surrounding grade (such that the completion is slightly above original ground surface), outfitting the protective structure with a steel lid or manhole cover and rubber gasket, and ensuring a watertight bond between the surface seal and protective structure.

2.8 Well Surveying

The location of all wells should be surveyed by a California Registered Civil engineer or licensed professional surveyor. All well locations should be recorded using the California State Plane coordinate system. In addition, Cal EPA recommends that the height of a reference survey datum, permanently marked on top of the inner well casing, be determined within ±0.01 foot in relation to mean sea level, which in turn is established by reference to an established National Geodetic Vertical Datum. The surveyed reference mark should be placed on the top of the well casing, not on the protective casing or the well apron, for use as a measuring point because the well casing is less susceptible to disturbance (e.g., frost heave, collision) than the protective casing or well apron. The survey should also note the coordinates of any temporary benchmarks. The reference marked on top of inner well casings should be resurveyed at least once every 5 years, unless anomalous ground water head data appear or damage to the well casing or protective completion is noted. These cases may require that well casings be resurveyed on a more frequent basis.

Well alignment may need to be assessed to check for proper screen placement and smooth passage of sampling and pumping equipment. Well alignment can be checked by passing a 20- to 40-foot length of steel pipe through the hole. The diameter of the steel pipe should be no less than 0.5 inches smaller than the diameter of the well. The pipe should descend to the bottom of the well without binding. For shallow wells (40 feet or less), an alternative procedure may be chosen. Another alternative is to quantitatively measure hole alignment through a deviation test. Well deviation tests should be performed for any well greater than 200 feet deep. The American Water Works Association (1984; p. 27-34) discusses procedures for assessing alignment and plumbness of wells.

2.9 Well Development

All monitoring wells should be developed to create an effective filter pack around the well screen, to rectify damage to the formation caused by drilling, to optimize hydraulic communication between the formation and the well screen, and to assist in restoring the natural water quality of the aquifer near the well. Development stresses the formation around the screen, as well as the filter pack, so that mobile fines, silts,

and clays are pulled into the well and removed. The process of developing a well creates a graded filter pack around the well screen. Development is also used to remove any foreign materials (drilling water, muds, etc.) that may have been introduced into the well borehole during drilling and well installation, and to aid in the equilibration that will occur between the filter pack, well casing, and the formation water.

The development of a well is extremely important to ensuring the collection of representative ground-water samples. If the well has been properly completed, then adequate development should remove fines that may enter the well either from the filter pack or the formation. This improves the yield, but more importantly it creates a monitoring well capable of producing samples of acceptably low turbidity. Turbid samples from an improperly constructed and developed well may interfere with subsequent analyses.

When development is initiated, a wide range of grain sizes of the natural material is drawn into the well, and the well typically produces very turbid water. However, as pumping continues and the natural materials are drawn into the filter pack, an effective filter will form through a sorting process. Inducing movement of ground water into the well (i.e., in one direction) generally results in bridging of the particles. A means of inducing flow reversal is necessary to break down bridges and produce a stable filter pack.

The common methods for developing wells are described by Aller et al. (1989) and Driscoll (1986) and include:

- Pumping and overpumping,
- Backwashing,
- Surging with a surge block,
- Bailing,
- Jetting,
- Airlift pumping, and
- Air Surging.

Aller et al. (1989) provide a detailed overview of well development and should be consulted when evaluating well development methods. Overall, the most effective and efficient method available for inducing flow reversal during well development is the careful use of a properly-constructed surge block. To be effective, the surge block may need to be lifted and lowered throughout the well screened interval for several hours, with periodic pumping or bailing of the fines. However, use of a surge block can result in potential damage to the well screen and filter pack. In low-permeability zones, excessive fines may penetrate the filter material. Depending on the depth of the water, the hydraulic conductivity of the aquifer, and the diameter of the well, pumping may effectively achieve well development.

The following is a general procedure for developing a well by surging and pumping of fines:

1. Record the static water level and total well depth.

2. Set the pump and record the pumping rate. Pump until turbidity reaches the desired level as measured using a turbidity meter.

3. Discontinue pumping and begin surging using a properly designed surge block and proper surging technique.

4. Measure and record well depth to determine the amount of fines, and repeat Step 2. If the well has been properly designed, the amount of pumping required to achieve the desired turbidity level will be substantially less than the amount of pumping required during the first pumping cycle.

5. Repeat surging and pumping until the well yields water of acceptable turbidity at the beginning of a pumping cycle. A good way to ensure that development is complete is to shut the pump off during the last anticipated pumping cycle, leaving the pump in place, and re-start it at a later time. The turbidity of the discharge water should remain low.

Effective and efficient well development is possible only with adequate flow rate during water withdrawal. Additionally, any fines that have been drawn into the well should be removed to the greatest degree possible. Therefore, Cal EPA recommends that one of the following pumping methods, listed in the order of preference, be used in conjunction with a properly designed surge block:

1. Centrifugal pump capable of removing fines if the water level is within suction-lift distance.

2. Electric submersible pump capable of pumping fines.

3. Properly designed and operated air-lift system (with Cal EPA approval).

Well development methods and equipment that alter the chemical composition of the ground water should not be used. Development methods that involve adding water (including water pumped from the well) or other fluids to the well or borehole, or that use air to accomplish well development, are discouraged. Consequently, methods that are unsuitable in most cases for monitoring well development include backwashing, jetting, airlift pumping, and air surging. Approval should be obtained from the lead regulatory agency prior to introducing air, water, or other fluids into any well for the purpose of well development. Any water introduced into the well during well development should be chemically analyzed to determine its potential impact on water quality. The well development methods that are generally accepted by Cal EPA are bailing, surging with a surge block, pumping (and overpumping), or combinations of these methods. Airlift pumping may be acceptable if the RP can demonstrate that appropriate measures will be taken for preventing air contact with the formation, and from preventing the entry of compressor oils into the well.

Monitoring wells should not be developed before well sealant materials have set or cured (generally a minimum of two days after its emplacement).

Ground water should be collected and measured for turbidity periodically during well development and at the completion of well development. The final turbidity measurement should be recorded on the well construction log. A well that cannot be developed to the point of producing low turbidity water (<5 NTUs) may be considered by Cal EPA to have been improperly completed (e.g., mismatched filter pack and formation materials or filter pack and screen slot size). If a well is not producing low turbidity ground-water samples (<5 NTUs), the RP should demonstrate to the satisfaction of the appropriate regulatory agency that proper well completion and development measures have been employed. Failure to make such a demonstration could result in a determination by Cal EPA that the well should be decommissioned and replaced.

Cal EPA emphasizes that proper well construction and development procedures, as well as proper sampling procedures (e.g., selection of appropriate well purging and sampling rates), are necessary to yield ground-water samples that are representative of ambient water quality. Cal EPA recognizes that ground water in some wells (both high and low yield) in fractured rock or karst aquifers may become muddy after periods of rainfall, even though during fair weather the water is free of turbidity. Wells completed in very silty geologic units also may produce consistently turbid samples. Wells of this type will normally be considered to have been properly installed and developed, and turbid water samples will be considered representative of mobile constituents in the aquifer. Information obtained from any aquifer tests conducted on the well should be used to establish the initial yield of the well, and these data can be used for periodic redevelopment and maintenance assessments.

If well drilling, installation, or completion have altered ground-water quality chemically in the vicinity of the well, well development should aid in restoring ground-water quality within the well to natural ground-water quality. The ability of a well development method to remove clays from the sides of the borehole should be considered, because clays retained in the borehole may alter the chemical composition of ground water in the well. Periodic monitoring of ground water during well development, for water quality parameters such as specific conductance, temperature and pH, should be performed. The reproducibility of these field parameters indicates that ground-water chemistry in the well has been restored to natural quality. The volume of water withdrawn from a well during development should be recorded.

2.10 Documentation of Well Design, Construction, and Development

Information on the design, construction, and development of each well should be compiled. Such information should include: (1) a boring log that documents well drilling and associated sampling (as discussed in Cal EPA, 1994), and (2) a well construction log and well construction diagram ("as built"). The well construction log and well construction diagram should present the following information (including dimensions, as appropriate):

- Well name/number;

- Date/time of well construction;
- Borehole diameter and well casing diameter;
- Well depth (±0.1 ft);
- Casing length;
- Casing materials;
- Casing and screen joint type;
- Screened interval(s);
- Screen materials;
- Screen slot size/design;
- Filter pack material, gradation, uniformity coefficient and size;
- Filter pack volume (calculated and actual);
- Filter pack placement method;
- Annular sealant composition;
- Annular seal placement method;
- Annular sealant volume (calculated and actual);
- Surface sealant composition;
- Surface seal placement method;
- Surface sealant volume (calculated and actual);
- Surface seal and well apron design/construction;
- Well development procedure and ground-water turbidity measured at the completion of well development;
- Type and design/construction of protective casing;
- Well cap and lock;
- Ground surface elevation (±0.01 ft);
- Survey reference point elevation (±0.01 ft) on well casing;

The RP should document that the following well completion activities were performed appropriately:

- Selection of construction materials for the casing and screen;
- Selection of the well diameter, screen length, and screen slot size;
- Selection and emplacement of the appropriate filter pack;
- Selection and emplacement of the annular sealants;
- Providing proper security of the well;
- Surveying the locations and elevations of the tops of the casings; and
- Adequately developing the well.

All documents pertaining to the design, construction, and development of monitoring wells should be kept by the RP and copied and sent to Cal EPA if requested.

3 SPECIALIZED WELL DESIGNS

There are two cases where special monitoring well designs should be used:

- Where the RP has chosen to use dedicated pumps to withdraw ground-water samples or,
- Where separate low density or high density NAPL's may be present.

Dedicated ground water sampling devices should be constructed of fluorocarbon resin or stainless steel and approved by the lead regulatory agency. The design of the dedicated sampling system should allow access to the well for the purpose of conducting aquifer tests, maintaining the well (e.g., redevelopment procedures), and making water level measurements. Dedicated sampling systems should be periodically inspected to ensure that the equipment is functioning reliably. Samples should be withdrawn from the system to evaluate the operation of the equipment, and the equipment should be checked for damage.

Where light and dense NAPL's are presumed present, specialized well systems should be designed to allow collection of discrete samples of both the light and dense phases. In certain cases well screens that extend from above the water table to the lower confining layer may be appropriate, but more frequently the presence of immiscible phases will require that well clusters or multilevel sampling devices be installed. Where well clusters are employed, one well in the cluster may be screened at horizons where light NAPL's are expected, and another may be screened at horizons where dense NAPL's are expected. Other wells may be screened within other portions of the aquifer.

4 EVALUATION OF EXISTING WELLS

Existing monitoring wells should meet the construction and performance standards presented in the California Code of Regulations and any county, city or district ordinances. There are two situations in particular where wells may fail to meet the performance standards: (1) where existing wells are physically damaged, and (2) where the RP can produce little or no documentation of how existing wells were designed and installed.

Wells that are physically damaged, or wells for which there is not sufficient documentation of design and construction, may need to be replaced. In addition, wells that produce consistently turbid samples (≥5 NTUs) or were not properly designed or constructed may also warrant replacement. In such cases, professional judgment should be used in deciding when to replace wells.

When existing wells do not meet the performance standards outlined in this document, the wells should be properly decommissioned and, if required by the lead regulatory agency, replaced. The design, installation, development and decommissioning of any monitoring wells, piezometers and other measurement, sampling, and analytical devices should be recorded.

5 DECOMMISSIONING GROUND WATER MONITORING WELLS AND BOREHOLES

Ground-water contamination resulting from improperly decommissioned wells and boreholes is a serious concern. The USEPA (1975) and the American Water Works Association (1984; p. 45-47), provide the following reasons, summarized by Aller et al. (1989), as to why improperly constructed or unused wells should be properly decommissioned:

- To eliminate physical hazards;
- To prevent ground-water contamination;
- To conserve aquifer yield and hydrostatic head; and
- To prevent mixing of subsurface water.

Should a RP have an open, unused borehole or an improperly constructed or unused well at his or her facility, the well or borehole should be decommissioned in accordance with specific guidelines. Cal EPA recommends the following method for borehole abandonment:

- Completely filling the entire hole from the bottom up with grout to within a few (5 or less) feet of ground surface, and
- backfilling the uppermost few feet with clean fill material.

Within water-bearing zones, grout should be a cement-bentonite mixture. Within the unsaturated zone, cement without bentonite should be used, to avoid desiccation of the seal. Other additives or cement mixtures may be needed under special circumstances. ASTM (1992) may be consulted for more information on grout mixtures. To prevent bridging and help ensure a good seal, grout should be kept under pressure during emplacement. This can be achieved by use of a tremie pipe to feed grout into the hole. At all times, the opening

of the tremie pipe should be submerged several (2 or more) feet below the level of grout in the hole. The amount of submergence will be dependent on the amount of pressure needed to assure adequate penetration of grout into the formation. Free-fall emplacement of grout is not an acceptable practice. When considering the installation of ground-water monitoring wells in the vicinity of decommissioned boreholes, RP's should ensure that borehole sealant materials (e.g., cement) will not alter the chemistry of the ground-water to be monitored.

There are several acceptable methods for well abandonment and are outlined as follows (refer to DWR Bulletin 74-90, California Well Standards, for more discussion of well decommissioning). If a well to be decommissioned is contaminated, the safe removal and proper disposal of the well materials should be ensured by the RP. Appropriate measures should also be taken to protect the health and safety of individuals when decommissioning a well.

For wells constructed according to this document:

- pull or overdrill the entire well casing, including telescoped casings and multi-well completions, then completely fill the hole, with grout under pressure, to within five feet (or less) of the surface and backfill the uppermost few feet with clean fill material; or,

- rip or perforate the entire depth of the well (optional for properly constructed wells screened at water table only), followed by grouting the entire well under pressure; then,

- remove the uppermost five feet (or less) of casing, annular seal and surface completion and backfill with clean fill material.

For wells not constructed according to this document:

- pull or overdrill the entire well casing, including telescoped casings and multi-well completions, then completely fill the hole, with grout under pressure, to within five feet (or less) of the surface; or

- In a stepwise fashion (from the bottom up), rip or perforate the well screens, and all casing intervals adjacent to fine-grained or low-permeability strata (as identified from borehole logs), and fill with grout under pressure to within five feet (or less) of the surface,

- remove the uppermost five feet (or less) of casing, annular seal and surface completion and backfill with clean fill material.

County, city and local districts may have their own specific ordinances for well decommissioning. These local agencies should be consulted for their requirements prior to decommissioning a well.

Within water-bearing zones, grout should be a cement-bentonite mixture. Within the unsaturated zone, cement without bentonite should be used, to avoid desiccation of the seal. Other additives or cement mixtures may be needed under special circumstances. ASTM (1992) may be consulted for more information on grout mixtures. To prevent bridging and help ensure a good seal, grout should be kept under pressure during emplacement. This can be achieved by use of a tremie pipe to feed grout into the hole. At all times, the opening of the tremie pipe should be submerged several (2 or more) feet below the level of grout in the hole. The amount of submergence will be dependent on the amount of pressure needed to assure

adequate penetration of grout through the screen or casing and into the formation. Free-fall emplacement of grout is not an acceptable practice.

Records of well decommissioning should be kept. The following data should be recorded:

- location of well;
- method of decommissioning;
- total well depth;
- well diameter (hole diameter if overdrilling);
- depth to water;
- grout composition;
- volume of grout used;
- depth to casing separation and length removed.

Aller et al. (1989) and ASTM (1992) provide additional information on performing well decommissioning, and should be referenced as needed.

Local ordinances may specify recording surface completion details more stringent than discussed in this document or its references. Cal EPA and other involved regulatory agencies, as well as experienced geologists, geotechnical engineers, and drillers, should be consulted prior to decommissioning a well or borehole to ensure that decommissioning is appropriately performed and to ensure compliance with state and local laws.

6 REFERENCES

Aller, L., T.W. Bennett, G. Hackett, R.J. Petty, J.H. Lehr, H. Sedoris, D.M. Nielsen, and J.E. Denne. 1989. Handbook of Suggested Practices for the Design and Installation of Ground-Water Monitoring Wells. EPA/EMSL-Las Vegas, USEPA Cooperative Agreement CR-812350-01, EPA/600/4-89/034, NTIS #PB90-159807.

American Society of Testing and Materials (ASTM). 1992. Standard guide for decommissioning of ground water wells, vadose zone monitoring devices, boreholes, and other devices for environmental activities. D 5299-92. 1993 Annual Book of ASTM Standards, Philadelphia, pp. 1318-1333.

American Society of Testing and Materials (ASTM). 1990. Standard practice for design and installation of ground water monitoring wells in aquifers. D 5092-90. 1993 Annual Book of ASTM Standards, Philadelphia, pp. 1210-1221.

American Society of Testing and Materials (ASTM). 1986. Standard Specification for Poly (vinyl chloride) (PVC) Plastic Pipe, Schedules 40, 80, and 120. D1785, 1987 Annual Book of ASTM Standards, Philadelphia, pp. 89-101.

American Society of Testing and Materials (ASTM). 1981. Standard Specification for Thermoplastic Water Well Casing Pipe and Couplings Made in Standard Dimension Ratios (SDR). F-480, 1987 Annual Book of ASTM Standards, Philadelphia, pp. 1028-1033.

American Water Works Association. 1984. American Water Works Association Standard for Water Wells, American Water Works Association, Denver, Colorado.

Barcelona, M.J., G.K. George, and M.R. Schock. 1988a. Comparison of Water Samples from PTFE, PVC, and SS Monitoring Wells. USEPA Cooperative Agreement #CR812165-02, 37 pp.

Barcelona, M.J., and J.A. Helfrich. 1988. Laboratory and Field Studies of Well-casing Material Effects, in Proc. of the Ground Water Geochemistry Conference, National Water Well Association, Dublin, Ohio, pp. 363-375.

Barcelona, M.J., J.A. Helfrich, and E.E. Garske. 1985a. Sampling Tubing Effects on Ground-Water Samples. Analytical Chemistry, pp. 460-464.

Barcelona, M.J., J.P. Gibb, J.A. Helfrich, and E.E. Garske. 1985b. Practical Guide for Ground-Water Sampling, USEPA, Cooperative Agreement #CR-809966-01, EPA/600/2-85/104, 169 pp.

Barcelona, M.J., J.P. Gibb, and R.A. Miller. 1983. A Guide to the Selection of Materials for Monitoring Well Construction and Ground-Water Sampling. Illinois State Water Survey (ISWS), Champaign, IL. ISWS Contract Report 327, 68 pp.

Dablow, John S. III, G. Walker, and D. Persico. 1988. Design Consideration and Installation Techniques for Monitoring Wells Cased with TEFLON PTFE, in A.G. Collins and A.I. Johnson, eds., Ground-Water Contamination: Field Methods, ASTM STP 963, ASTM, Philadelphia, pp. 199-205.

Driscoll, F.G. 1986. Ground Water and Wells, 2nd edition. Johnson Division, St. Paul, Minnesota, 1089 pp.

Cal EPA. 1995. Drilling, Coring, Sampling and Logging at Hazardous Substances Release Sites. California Environmental Protection Agency, Department of Toxic Substances Control. p. 2-9.

DTSC. 1995. Guidelines for Hydrogeologic Characterization of Hazardous Substance Release Sites. California Environmental Protection Agency, Department of Toxic Substances Control.

Du Pont, reference 1. TEFLON Fluorocarbon Resin: Mechanical Design Data. E.I. DuPont de Nemours & Co., Inc., Wilmington, Delaware, 60 pp.

Du Pont, reference 2. Cold Facts About "Cold-flow." The Journal of TEFLON, Reprint no. 39, E.I. DuPont de Nemours & Co., Inc., Wilmington, Delaware, 2 pp.

Hamilton, H. 1985. Selection of Materials in Testing and Purifying Water. Ultra Pure Water, January-February, 3 pp.

Lang, K.T., M.H. Stutz, L.V. Parker, A.D. Hewitt, and T.F. Jenkins. 1989. Influence of Well Casing Materials on Chemical Species in Ground Water, in Proceedings of the Fifth Annual Waste Testing and Quality Assurance Symposium, Washington, p. 29.

Morrison, R.D. 1984. Ground-Water Monitoring Technology Procedures, Equipment, and Applications. Timco Mfg., Inc., Prairie du Sac, Wisconsin, 111 pp.

National Sanitation Foundation. 1988. National Sanitation Foundation Standard 14, Ann Arbor, MI, 65 pp.

National Water Well Association and Plastic Pipe Institute. 1981. Manual on the Selection and Installation of Thermoplastic Water Well Casing. National Water Well Association, Worthington, Ohio, 64 pp.

Nielsen, D.M., ed. 1991. Practical Handbook of Ground-Water Monitoring. Lewis Publishers, Chelsea, MI, 717 pp.

Palmer, C.D., J.F. Keely, and W. Fish. 1987. Potential for Solute Retardation on Monitoring Well Sand Packs and its Effect on Purging Requirements for Ground-Water Sampling. Ground-Water Monitoring Review, v. 7, pp. 40-47.

Purdin, W. 1980. Using Nonmetallic Casing for Geothermal Wells. Water Well Journal, v. 34, pp. 90-91.

Reynolds, G.W., and R.W. Gillham. 1985. Absorption of Halogenated Organic Compounds by Polymer Materials Commonly used in Ground-Water Monitoring. Proceedings of the Second Canadian/American Conference on Hydrogeology. National Water Well Association, Dublin, Ohio, pp. 125-132.

Sosebee, J.B., P.C. Geiszler, D.L. Winegardner, and C.R. Fisher. 1983. Contamination of Ground-Water Samples with PVC Adhesives and PVC Primer from Monitoring Wells, in R.A. Conway and W.P. Gulledge, eds., Proceedings of the ASTM Second Symposium on Hazardous and Industrial Solid Waste Testing, ASTM STP 805, ASTM, Philadelphia, pp. 38-50.

USEPA. 1986a. RCRA Ground-Water Monitoring Technical Enforcement Document. OSWER-9950.1.

USEPA. 1975. Manual of Water Well Construction Practices. USEPA Office of Water Supply, Report No. EPA-570/9-75-001, 156 pp.

Walker, W.H. 1974. Tube Wells, Open Wells, and Optimum Ground-Water Resource Development. Ground Water, v. 12, No.1, pp. 10-15.

Williams, E.B. 1981. Fundamental Concepts of Well Design. Ground Water, v. 19, No. 5, pp. 527-542.

INDEX

Annular Space 3, 25, 27-29
Bentonite 4, 29, 30, 38, 39
Borehole Construction 3
Carbon Steels 19
Casing and Screen Materials 5, 7-10, 13, 16, 17, 20, 22, 24
Casing Cleaning 24
Cement 4, 12, 13, 21, 22, 26, 29, 30, 38, 39
Cross-Sections 4
Decommissioning 1, 37-41
Development 1, 3, 5, 10, 12, 13, 24, 25, 32-37, 43
Documentation 35, 37
Driven Wells 5, 17, 20, 22
Evaluation of Existing Wells 37
Filter Pack 3, 12, 13, 25-29, 32-36
Fluoropolymer Materials 14, 16, 23
Joining Casing 24
Metallic Materials 14, 17, 18
Polyvinyl Chloride 14, 20
PVC 7, 14, 20-23, 41, 43
Screen Length 26, 36
Screen Slot Size 26, 34-36
Selecting Well Construction Materials 8
Solvent Cementing 26
Stainless Steel 14, 17, 19, 20, 23, 37
Surface Completion 30, 38, 39
Surveying 31, 36
Thermoplastic Materials 14, 20, 21
Turbidity 26, 27, 32-34, 36
Well Alignment 32
Well Design 2, 3, 23, 35, 43
Well Diameter 24, 36, 39