Department of Toxic Substances Control
February 10, 2016

Overview of Drinking Water Radionuclide Rule and the Occurrence of Radium in California Groundwater Wells

Shiyamalie Ruberu, Ph.D.
Drinking Water and Radiation Laboratory
California Department of Public Health

Outline

- Radiochemistry Unit
- Drinking Water Regulations
  - Radionuclides Rule
- Distribution of Radium Isotopes in Groundwater Wells in California

Richmond Laboratory Campus (RLC)

700,000 sq ft
Lab/office space
29 acre site
(500,00 sq ft lab space)

DWRL

Offices : Building G
Lab: Building D,
1st, 2nd floors
38,000 sq ft space

Drinking Water and Radiation Laboratory

- Chemistry and Radiochemistry Section
  - Chemistry Unit
    Organic
    Inorganic
  - **Radiochemistry Unit**
- Microbiology and Biomonitoring Section
  - Biomonitoring Unit
  - Microbiology and Program Support Unit

Radiochemistry Unit (RCU) Clients

- Drinking Water Program (DWP) and Environmental Laboratory Accreditation Program (ELAP)
  - State Water Resources Control Board
- Radiologic Health Branch (RHB)
- Environmental Management Branch (EMB)
- Terrorism and Nuclear Power Plant Emergency Response

Types of Matrices

- Water
- Soil / Sediment
- Sludge (Semi-solid Samples)
- Air
- Vegetation
- Shellfish and Fish
- Milk
- Wipes
- Miscellaneous

Counting Instruments

- Proportional Counters (3)

- Liquid Scintillation Counters (3)

- Gamma Spectroscopy (7 Germanium detectors)

- Alpha Spectroscopy (24 PIPS detectors)

Drinking Water Methods

- Gross Alpha, Gross Beta (SM 7110 B)
- Total Uranium (SM 7500-U C, ASTM D 5174)
- Radium-226 (EPA 903.0, GA)
- Radium-228 (EPA 904.0, GA)
- Gamma Emitters (EPA 901.1)
- Strontium-89/90 (EPA 905.0)
- Iodine-131 (EPA 901.1)
- Tritium (EPA 906.0)

Other Types of Analyses

- Isotopic Plutonium (Pu-238, Pu-239)
- Isotopic Americium (Am-241)
- Isotopic Thorium (Th-232, Th-230, Th-228)
- Isotopic Uranium (U-234, U-235, U-238)
- Po-210
- Pb-212
- Rn-222
- C-14,P-32, S-35
- Ni-63
- Fe-55
- Tc-99

Proficiency Testing Programs

- US EPA Drinking Water PT
  - Annually, Environmental Resource Associates (ERA)
  - Gross alpha, gross beta, Total Uranium, Ra-226, Ra-228, I-131, Sr-89/90, H-3, Gamma Emitters.
- Mixed Analyte Performance Evaluation Program (MAPEP)
  - Annually, U.S. Department of Energy
  - Water, Soil, Vegetation, Air Filter
  - Gross alpha/beta, Actinides (Am-241, Pu-238, Pu-239, U-234, U-238), Sr-90, Tc-99, Gamma Emitters, Fe-55, Ni-63, H-3

The Radionuclides Rule

Drinking Water Regulations

- **California Code of Regulations (§64442,§64443)**
  - Title 22, Division 4, Chapter 15, Article 5

- **National Primary Drinking Water Regulations**
  - Federal Register - 40 CFR Part 141 and 142

    Final Rule Implemented December 8, 2003

Types of Radiation

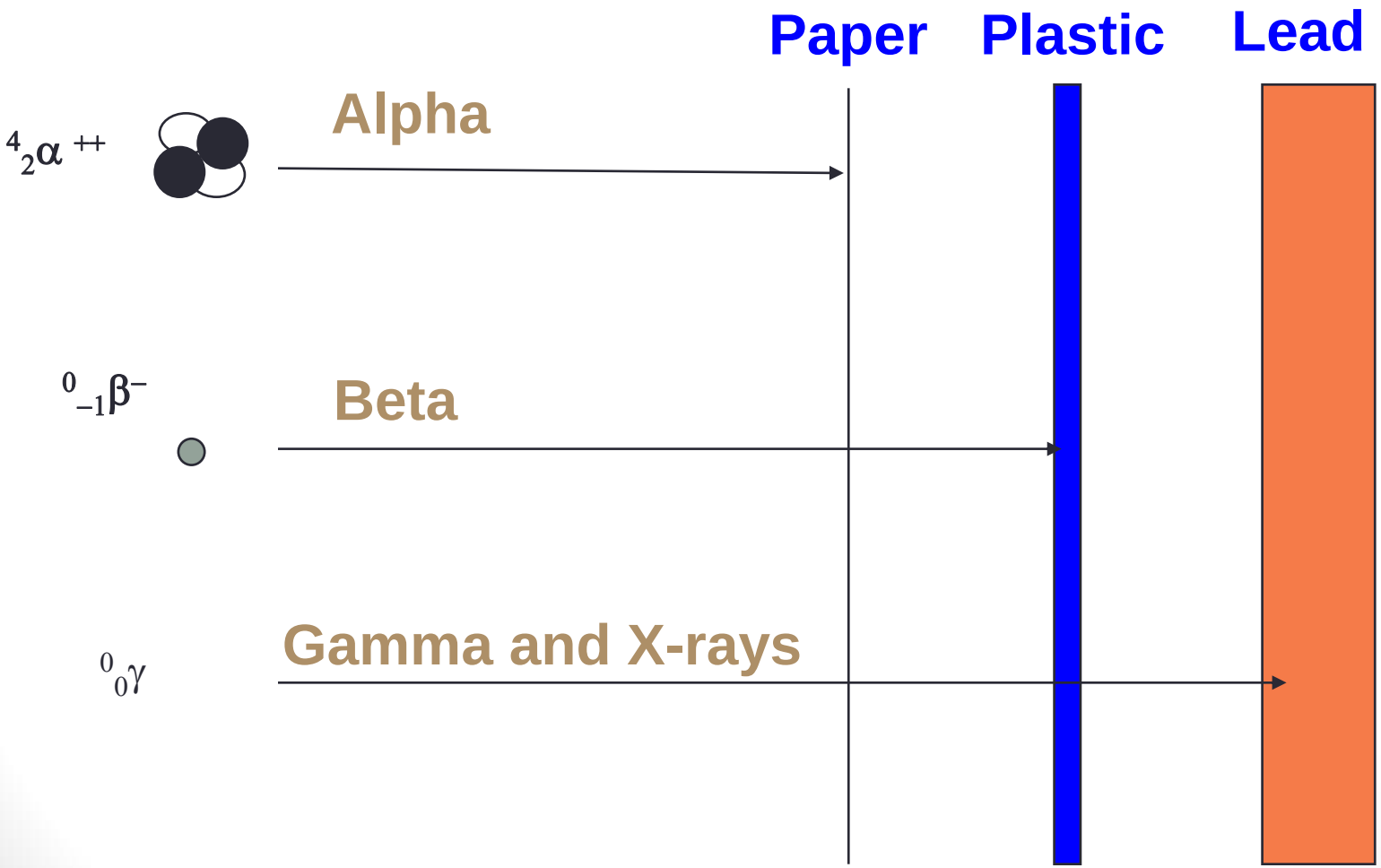

Types of Radiation Exposure

- **External**
  - from gamma photons, x-rays or high-energy beta particles emitted from a source outside the body

- **Internal**
  - from sources inside the body, which presumably came to be there following ingestion or inhalation of contamination (alpha in addition to above)

Units of Radiation Measurements

- Two types of units
  - Classical
  - System International (SI)

Units of quantity	curie (classical) and Becquerel (S.I.)
Units of exposure	roentgen
Units of absorbed dose	rad (classical) and gray (S.I.)
Units of effective dose	rem (classical) and sievert (S.I.)

Radioactivity: Quantity of radioactive material present at a given time

Curie (Ci) : 3.7×10^{10} disintegrations per second (dps)

Becquerel (Bq): 1 dps

US EPA typical units are pCi

1 pCi = 27 Bq

Background Radiation

- The average person in the United States receives about 360 mrem/yr (whole body equivalent dose)
- This dose is mostly from natural sources of radiation
- Typical annual radiation exposure to a resident of the Unites States -

Source	mrem
Inhaled (radon & its progeny)	200
Other internal (K-40)	39
Terrestrial	28
Cosmic	27
Cosmogenic	1
Medical X-ray	60
Total	~ 360

MCLs DLRs

Constituent	DLR	MCL
Gross Alpha (excluding radon and uranium)	3 pCi/L	15 pCi/L
Combined Radium (CWS) (Ra-226 + Ra-228)	2 pCi/L	5 pCi/L
Ra-226	1 pCi/L	NA
Ra-228	1 pCi/L	NA
Uranium	1 pCi/L	20 pCi/L
Total Alpha Radium (NTNC) (Ra-223 + Ra-224 + Ra-226)	2 pCi/L	5 pCi/L
Gross Beta (excluding K-40)	4 pCi/L	50 pCi/L
Photon Emitters	168 individual emitters used to calculate compliance	4 millirem/year annual dose to total body or any internal organ
Strontium-90	2 pCi/L	8 pCi/L
Tritium	1000 pCi/L	20,000 pCi/L

Monitoring for compliance

- Initial Monitoring
  - For all community water supplies
  - Average result of four consecutive quarterly samples at each sampling site for each radionuclide
  - System may composite four consecutive samples, if analysis done within a year of first collection
- Reduced/Routine Monitoring
  - Based on initial monitoring results
  - An increase in contaminant concentration may increase monitoring frequency for that contaminant

Frequency of monitoring depends on the results of the initial monitoring at an entry point

§64442

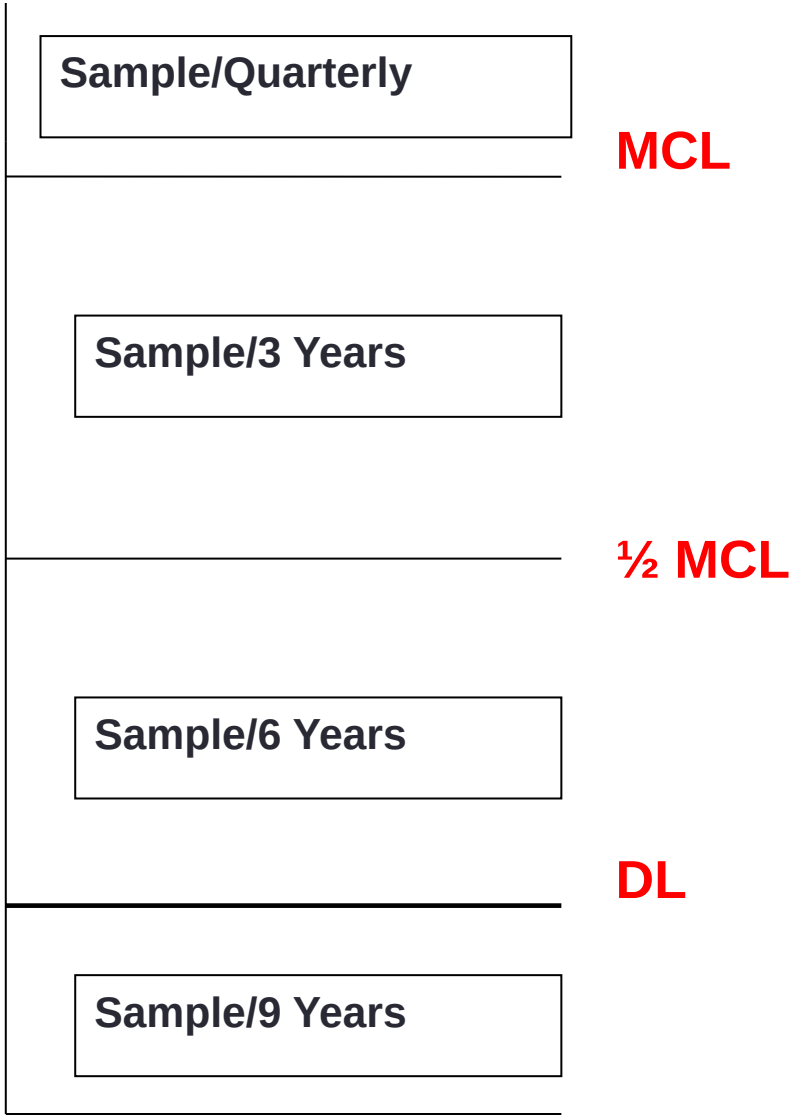

Gross Alpha Substitution

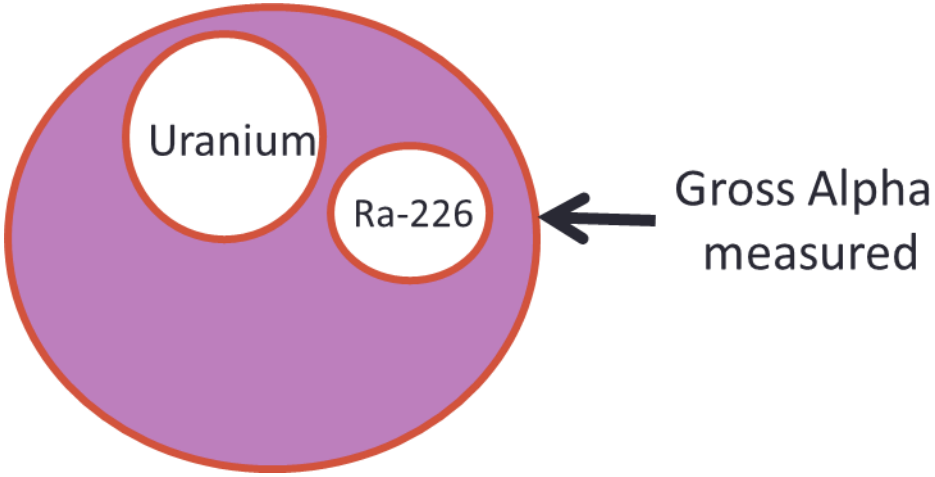

- Burden reduction to water systems
- Substitution of gross alpha for uranium
- Substitution of gross alpha for Ra-226

Community Water Systems (CWS)

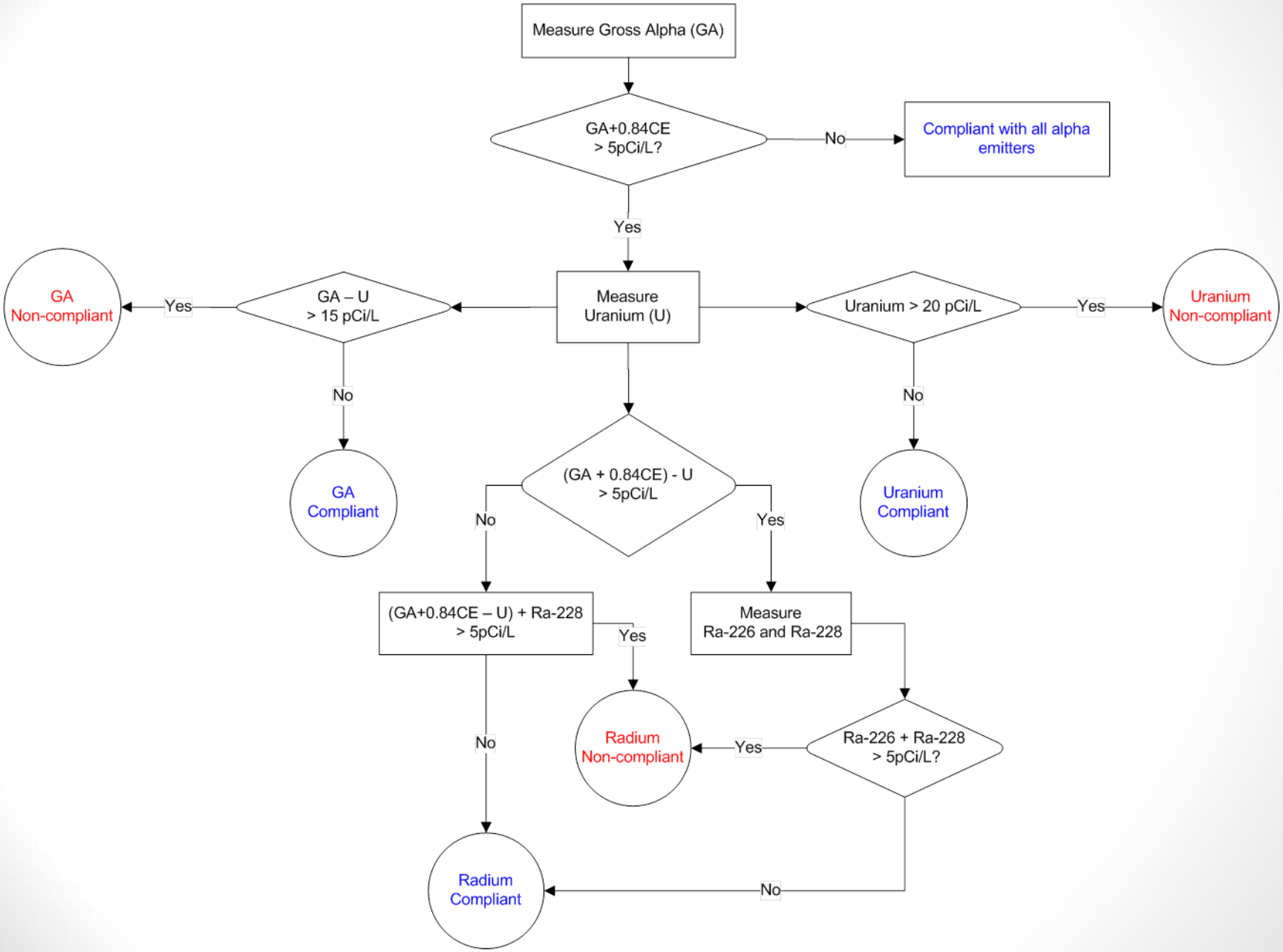

Distribution of Radium Isotopes in California Ground Water Wells

Occurrence of ^{224}Ra, ^{226}Ra, ^{228}Ra, Gross Alpha, and Uranium in California Ground Water" Ruberu, S.R., Liu, Y-G, Perera, S.K *Journal of Health Physics*, 2005, 89(6), 667-678

Occurrence and Distribution of Pb-210 and Po-210 in California Groundwater Determined by a Single Sample Method" Ruberu, S.R., Liu, Y-G, Perera, S.K *Journal of Health Physics*, 2007, 92(5), 432-441

Radium Isotopes

- Radium-226
  - Alpha emitter
  - $T_{1/2}$ = 1600 y
- Radium-228
  - Beta Emitter
  - $T_{1/2}$ = 5.8 y
- Radium-224
  - Alpha Emitter
  - $T_{1/2}$ = 3.7 d

Health Effects of Radium

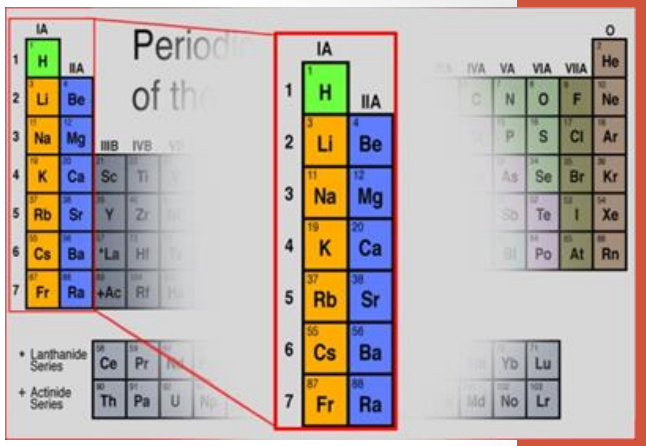

- Radium Facts
  - Discovered in 1898 by Marie and Pierre Curie
  - Group II alkaline earth metal
  - Metabolic behavior in body similar to Calcium
  - Deposits in bone and teeth
- Ingested through water/food, or inhaled (long term exposure)
  - Lymphoma
  - Bone cancer
  - Diseases that affect the formation of blood, (leukemia, aplastic anemia)
- External exposure
  - Gamma radiation
  - Increase risk of cancer to varying degrees to tissues and organs
- Radon
  - Radioactive decay product
  - Greater health risk

What isotopes of radium are regulated in California?

Combined Radium MCL

Ra-226 + Ra-228 5 pCi/L

Ra-224 is not regulated in California

New Jersey Regulations:

Requires gross alpha testing within 48 h of sample collection to include Ra-224

Where do the radium isotopes originate?

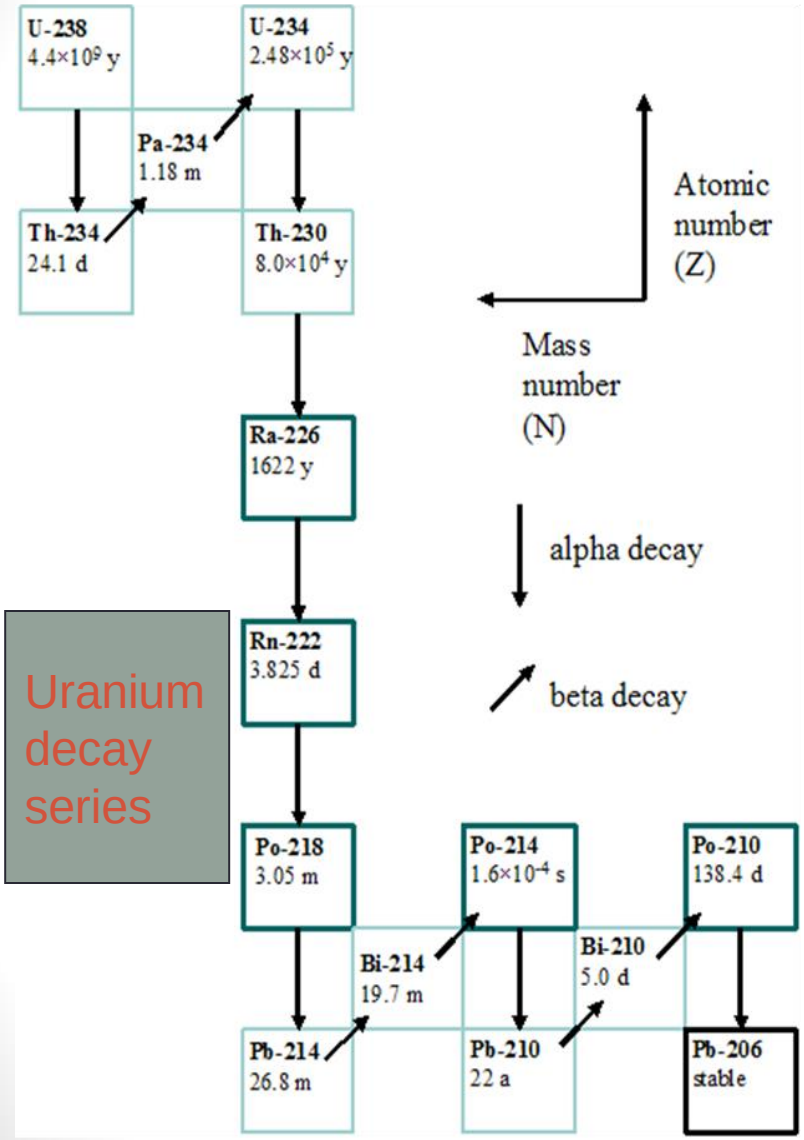

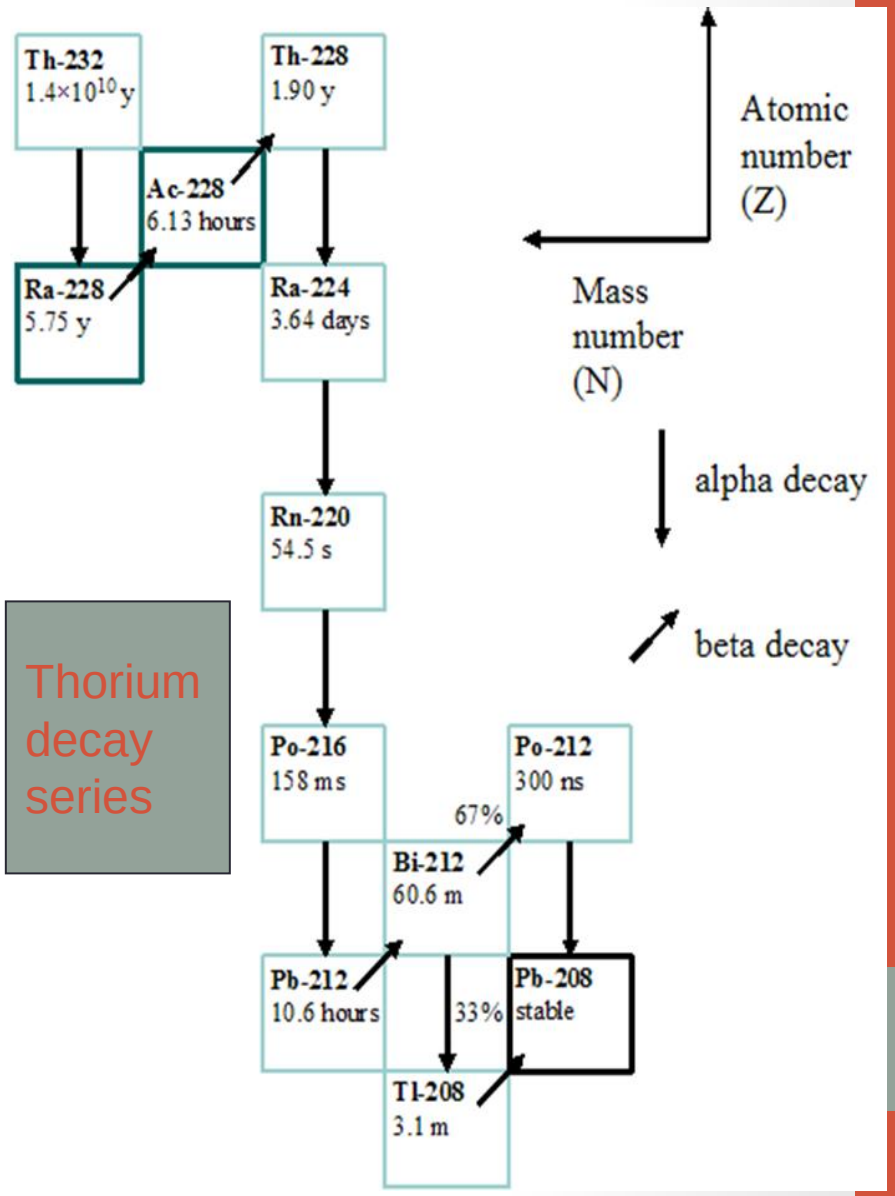

Locations of ground water wells sampled

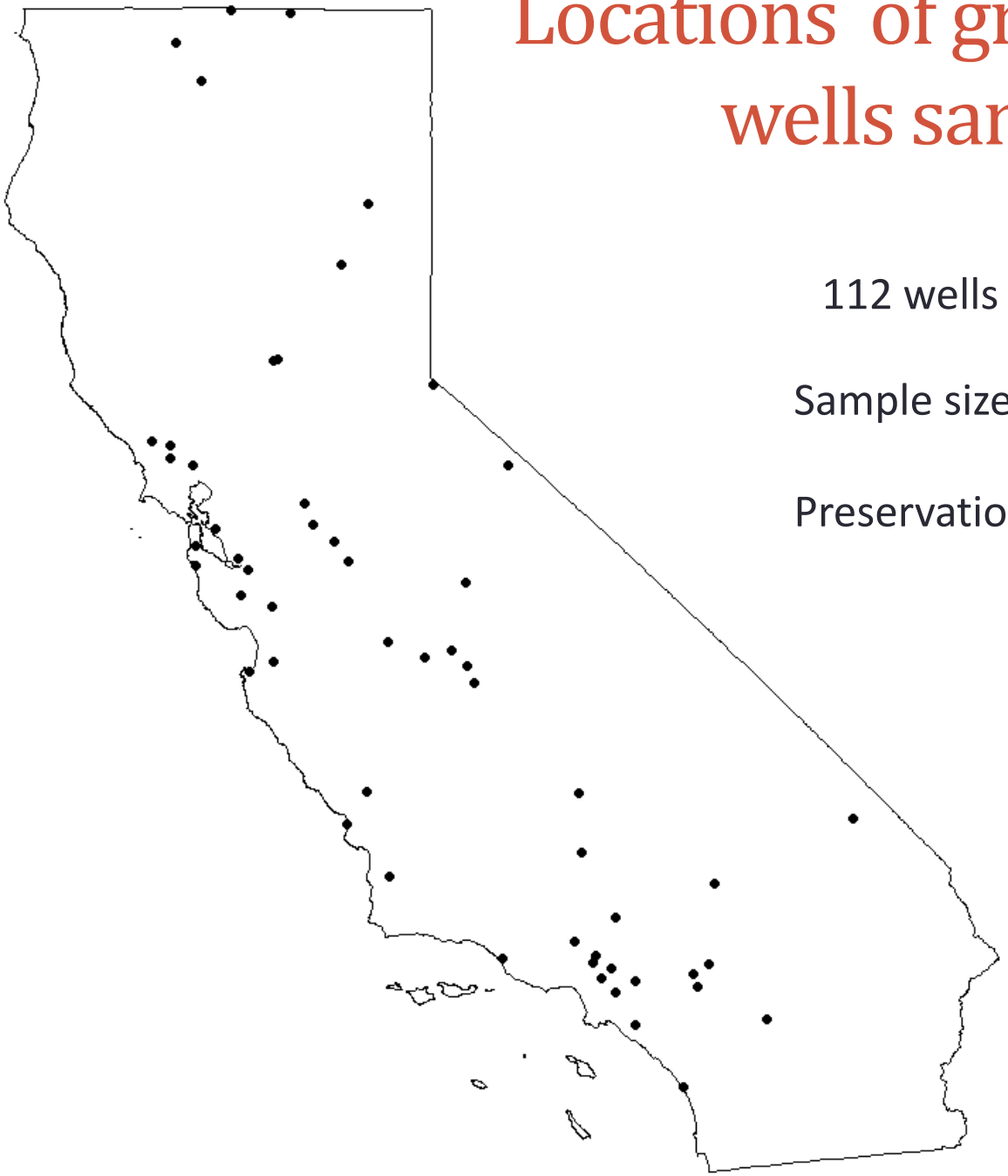

112 wells + 12 duplicate wells

Sample size = 12 L (3 cubitainers)

Preservation = acidified in field
HNO_3, pH 2

How do you extract radium from water?

5 L raw water

↓ 40 mg Ba carrier, H_2SO_4

$(Ba\text{-}Ra)SO_4$ ppt.

↓

Purified by re-precipitation from EDTA

↓

$Ba(Ra)SO_4$

↓

Measured for Ra-224
Ra-226, Ra-228
Gamma spectroscopy

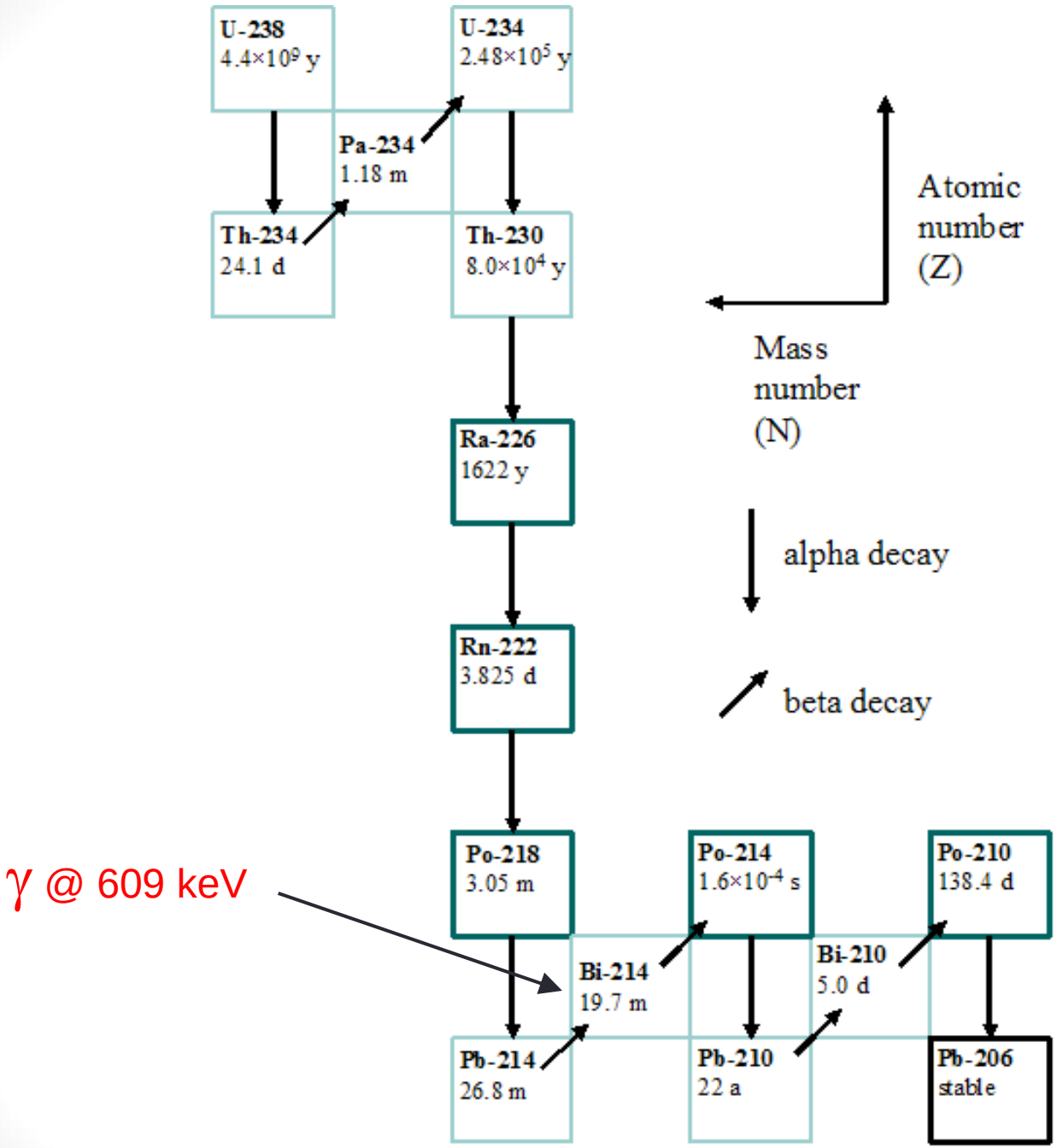
U-238
4.4×10⁹ y
U-234
2.48×10⁵ y
Pa-234
1.18 m
Th-234
24.1 d
Th-230
8.0×10⁴ y
Ra-226
1622 y
Rn-222
3.825 d
Po-218
3.05 m
Po-214
1.6×10⁻⁴ s
Po-210
138.4 d
Bi-214
19.7 m
Bi-210
5.0 d
Pb-214
26.8 m
Pb-210
22 a
Pb-206
stable
Atomic number (Z)
Mass number (N)
alpha decay
beta decay
γ @ 609 keV

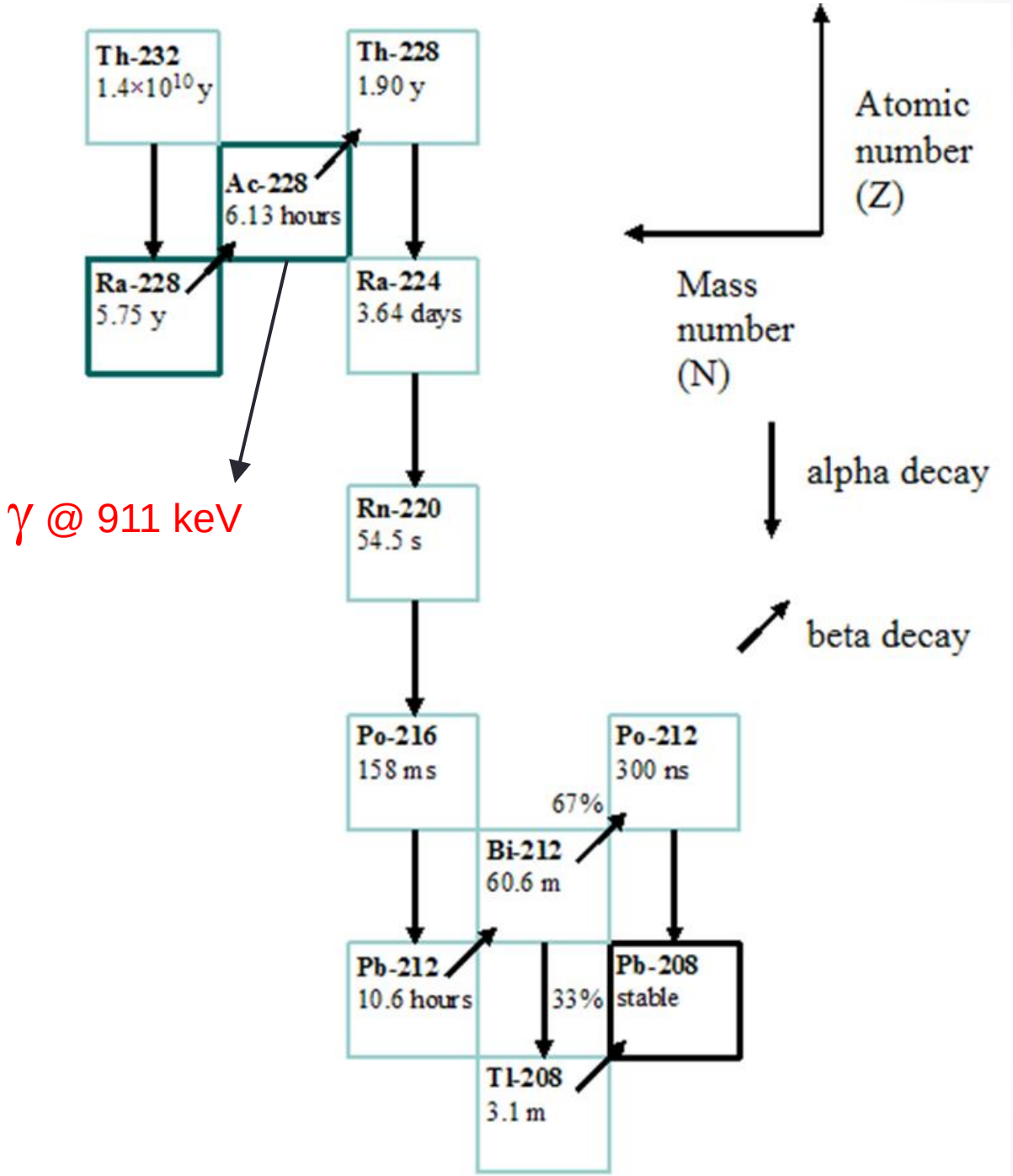
Th-232
1.4×10^10 y
Th-228
1.90 y
Ac-228
6.13 hours
Ra-228
5.75 y
Ra-224
3.64 days
Rn-220
54.5 s
Po-216
158 ms
Po-212
300 ns
67%
Bi-212
60.6 m
Pb-212
10.6 hours
33%
Pb-208
stable
Tl-208
3.1 m
Atomic number (Z)
Mass number (N)
alpha decay
beta decay
γ @ 911 keV

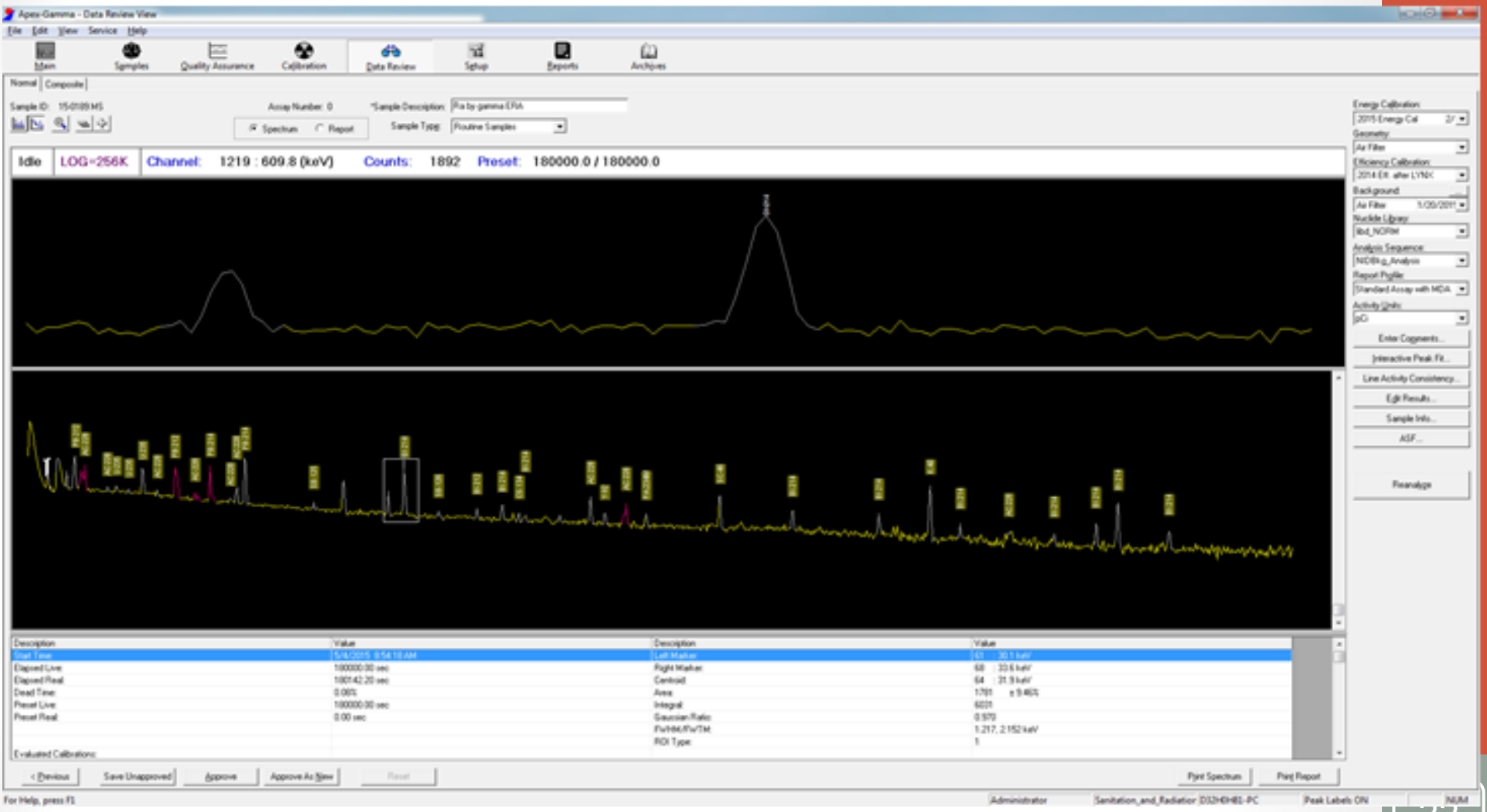
Apex-Gamma - Data Review View
File Edit View Service Help
Main
Samples
Quality Assurance
Calibration
Data Review
Setup
Reports
Archives
Normal
Composite
Idle
LOG=256K
Channel: 1219 : 609.8 (keV)
Counts: 1892
Preset: 180000.0 / 180000.0
Energy Calibration
Geometry
Efficiency Calibration
Background
Nuclide Library
Analysis Sequence
Report Profile
Activity Units
Enter Comments...
Interactive Peak Fit...
Line Activity Consistency...
Edit Results...
Sample Info...
ASF...
Reanalyze
Previous
Save Unapproved
Approve
Approve As New
Reset
Print Spectrum
Print Report
For Help, press F1
Administrator
Peak Labels ON
NUM

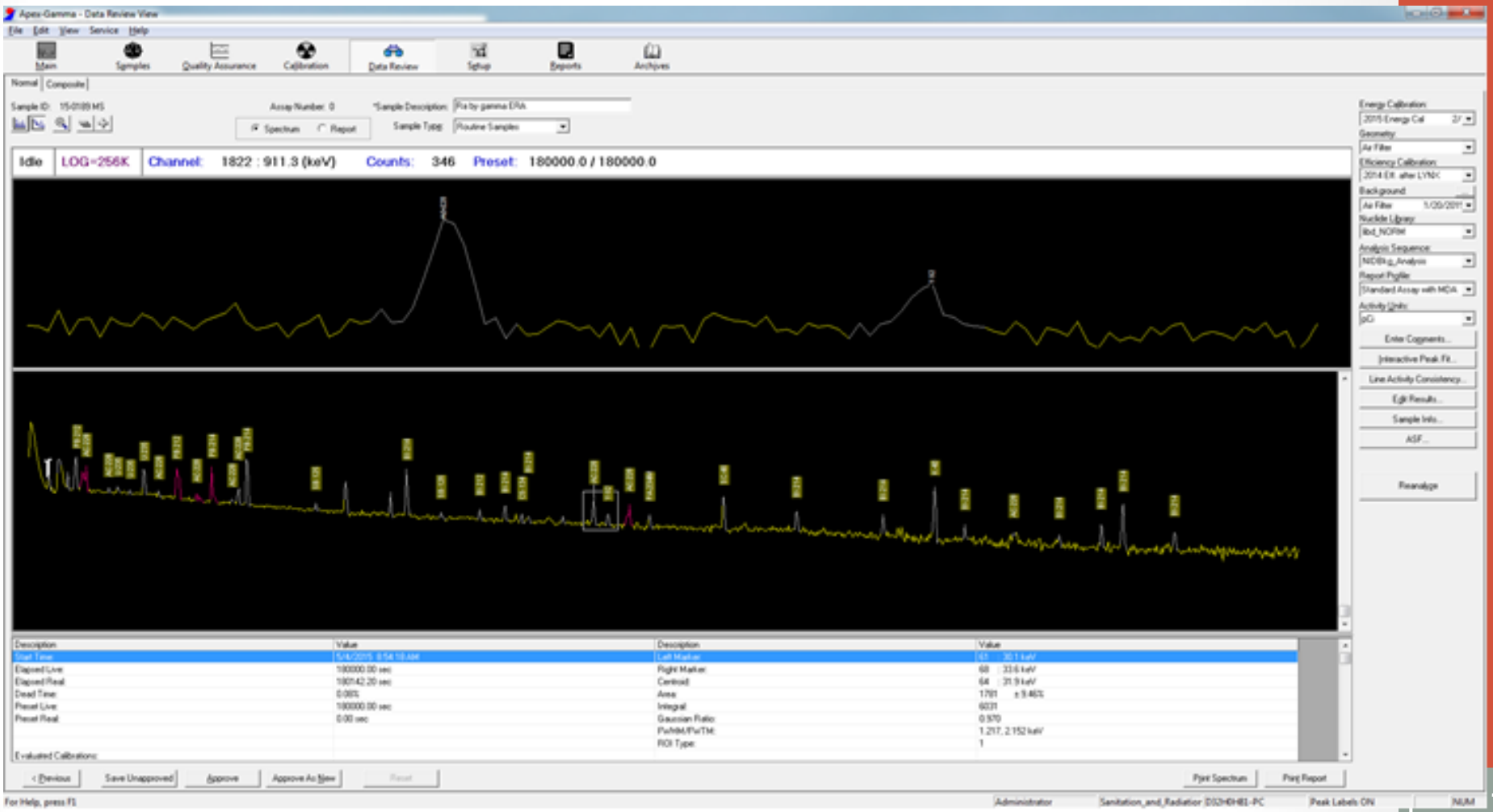
Apex-Gamma - Data Review View
File Edit View Service Help
Main
Samples
Quality Assurance
Calibration
Data Review
Setup
Reports
Archives
Idle
LOG=256K
Channel: 1822 : 911.3 (keV)
Counts: 346
Preset: 180000.0 / 180000.0
Reanalyze
Previous
Save Unapproved
Approve
Approve As New
Print Spectrum
Print Report
For Help, press F1

Summary

	^{224}Ra	^{226}Ra	^{228}Ra	Total Uranium
Number of Positive Samples	40	25	42	93
Percentage of Positive Samples	36%	22%	38%	82%
Median (pCi/L)	0.8	1.3	0.6	20
Average (pCi/L)	2.4	3	2.3	47
Range (pCi/L)	0.4-33	0.1-22	0.2-35	0.8-660

Plot of total uranium activity vs. gross alpha activity

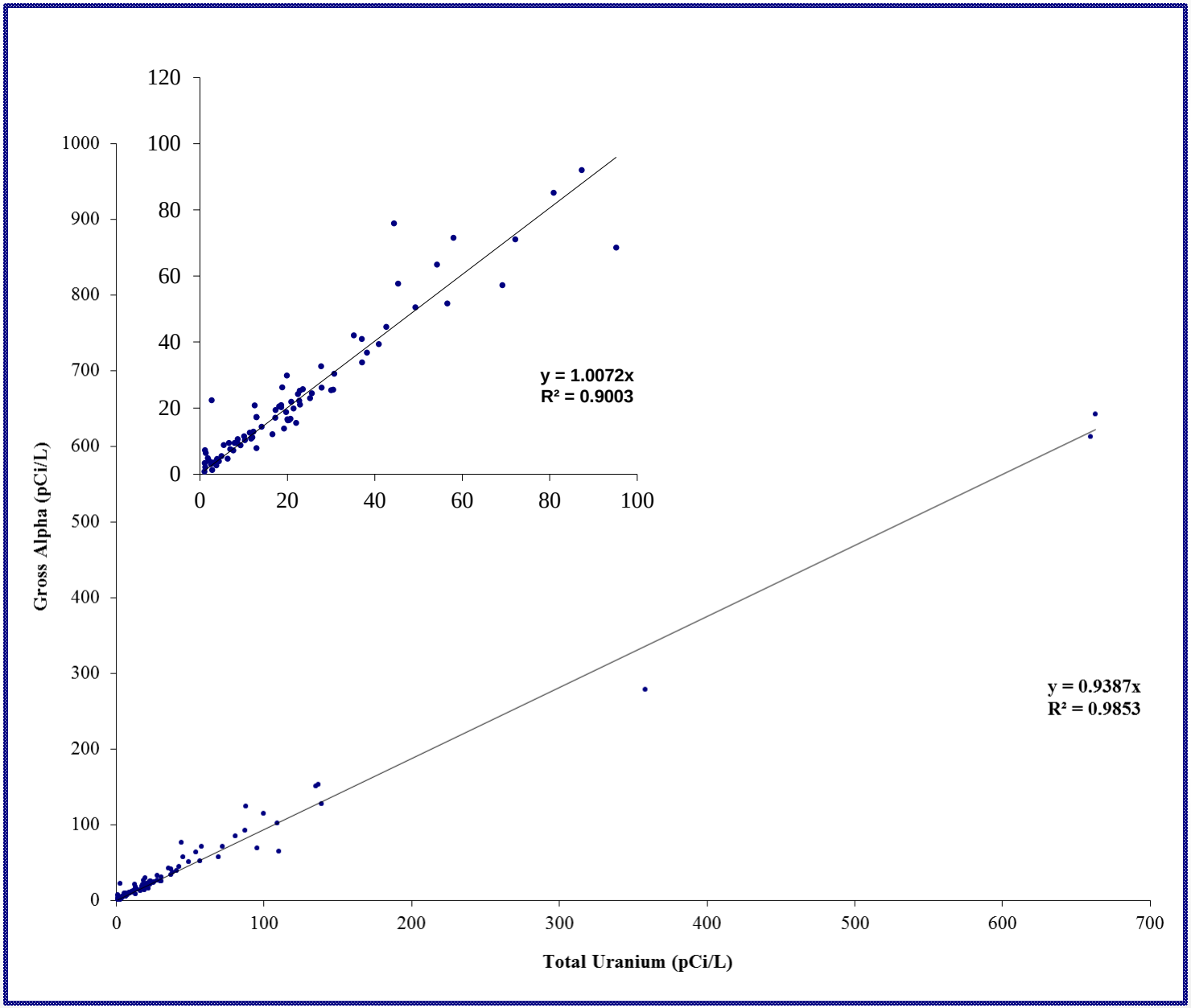

Summary

- Ra-226
  - Activities ranged 0.1 – 22 pCi/L
  - Wells exceeding MCL (> 5 pCi/L): San Bernardino County, Los Angeles County, Kern County
- Ra-228
  - Activities ranged 0.2 – 35 pCi/L
  - Wells exceeding MCL (> 5 pCi/L): Los Angeles County, Kern County, Molycorp (lanthanide mining site)
- Alpha emitting particles responsible for California groundwater gross alpha activities are from natural uranium.
  - Of the wells studied, 45% wells > uranium MCL (20 pCi/L)

Study Highlights

- Surveyed 112 California groundwater sources to give a comprehensive survey on the occurrence of ^{224}Ra, ^{226}Ra, ^{228}Ra, Gross Alpha, and Uranium.
- Overall, low radium activities in California groundwater.
- Uranium is a significant contributor to radioactivity in California groundwater.
- Wells exceeding radium MCL were all located in Southern California.

Questions?

Shiyamalie Ruberu
510-620-2930

Shiyamalie.Ruberu@cdph.ca.gov

$$\text{Gross Alpha Activity, pCi/L} = \frac{(R_\alpha - R_{B\alpha})}{(2.22)(\varepsilon_\alpha)(\text{volume})}$$

$$\text{95\% Counting Error, pCi/L} = \frac{1.96 * \sqrt{\frac{R_\alpha}{T_S} + \frac{R_{B\alpha}}{T_B}}}{(2.22)(\varepsilon_\alpha)(\text{volume})}$$

$$\text{MDA}_{95}\text{, pCi/L} = \frac{\frac{2.71}{T_S} + 4.65 * \sqrt{\frac{R_{B\alpha}}{T_B}}}{(2.22)(\varepsilon_\alpha)(\text{volume})}$$