EMERGENCY RESPONSE INTERIM MEASURES WORK PLAN
STORMWATER MANAGEMENT SYSTEM

Prepared for:
EXIDE TECHNOLOGIES
Vernon, California

EMERGENCY RESPONSE INTERIM MEASURES WORK PLAN
STORMWATER MANAGEMENT SYSTEM

Prepared for:

EXIDE TECHNOLOGIES
Vernon, California

Prepared by:

ADVANCED GEOSERVICES
West Chester, Pennsylvania

Project No. 2013-3007-01
May 24, 2013
Revised July 12, 2013
Revised August 5, 2013

EMERGENCY RESPONSE INTERIM MEASURES WORK PLAN
STORMWATER MANAGEMENT SYSTEM

Prepared For:

EXIDE TECHNOLOGIES
Vernon, California

Prepared By:

ADVANCED GEOSERVICES
West Chester, Pennsylvania

Project No. 2013-3007-01
May 24, 2013
Revised July 12, 2013
Revised August 5, 2013

REGISTERED PROFESSIONAL ENGINEER
PAUL GERARD STRATMAN
NO. C61595
EXP. 6/30/15
CIVIL
STATE OF CALIFORNIA

Paul G. Stratman, P.E.
Senior Project Consultant
California P.E. No. C61595

TABLE OF CONTENTS

PAGE NO.

1.0 Introduction 1-1

1.1 General 1-1
1.2 Site Location 1-1
1.3 Background 1-2
1.4 Scaqmd Requirements 1-3

2.0 Site Preparation 2-1

2.1 Notifications 2-1
2.2 Dust Control 2-1
2.3 Air Monitoring 2-3

2.3.1 Facility Perimeter 2-3
2.3.2 Work Area Perimeter 2-3
2.3.3 Personal Air Monitoring 2-4

2.4 Decontamination 2-4

3.0 Sampling 3-1

3.1 Types of Sampling 3-1
3.2 Pre-Removal Soil Borings 3-1
3.3 Post-Removal Soil Samples 3-4

4.0 Excavation 4-1

4.1 General 4-1
4.2 Sequence 4-2
4.3 Liquid Removal 4-2
4.4 Excavation 4-3
4.5 Post Removal Soil Sampling 4-5
4.6 Restoration 4-5
4.7 Inaccessible and Restricted Locations 4-6

5.0 Waste Management and Disposal 5-1

6.0 Schedule 6-1

7.0 Health and Safety 7-1

8.0 Cost Estimate 8-1

TABLE OF CONTENTS
(Continued)

PAGE NO.

9.0 Reporting..... 9-1

10.0 Modifications 10-1

LIST OF TABLES

TABLE

1 Existing Storm Sewer Underground Pipe Summary
2 Existing Manhole and Inlets

LIST OF FIGURES

FIGURE

1-1 Site Location Map
1-2 Facility Layout
4-1 Excavation Plan
4-2 Restoration Plan
4-3 Existing Pipe Profiles
4-4 Existing Pipe Profiles

LIST OF APPENDICES

APPENDIX

A 1420.1 Compliance Plan
B Ambient Air Monitoring Plan
C Typical Aerosol Monitor
D Real-time Air Monitoring Form
E Sampling and Analysis Plan
F Geotextile Requirements
G General Environmental, Health and Safety Rules and Regulations for Contractors and Subcontractors Working at Exide Technologies
H Cost Estimate

1.0 INTRODUCTION

1.1 GENERAL

This Interim Measures Work Plan was prepared in response to the Corrective Action Consent Order (Docket No. P 3-01/02-010) between the California Department of Toxic Substances Control and Exide Technologies. The plan addresses removal or abandonment of the existing stormwater system at the Exide Technologies facility in Vernon, California. The Emergency Response Interim Measures Work Plan (ERIMWP) was prepared by Advanced GeoServices on behalf of Exide Technologies.

1.2 SITE LOCATION

The Exide facility (Facility) is located at 2700 South Indiana Street as shown on Figure 1-1. The Facility occupies a total area of approximately 15 acres, which is bounded by East 26th Street towards the north and Bandini Avenue towards the south. A 1.5 +/- acre parcel, with approximately 190-ft of frontage along the north side of Bandini Boulevard and 345 ft of frontage along the east side of South Indiana Street, is occupied by the Main Office Building and employee parking area. The remaining 13.5 +/- acres, extends along the west side of South Indiana Street between Bandini Boulevard and East 26th Street and includes the active manufacturing areas. A concrete-lined drainage channel bisects the Facility in a north-south direction and a railroad right-of-way (ROW) intersects the Facility in an east-west direction (Figure 1-2). Site stormwater is managed to prevent runoff into the concrete-lined drainage channel.

The Facility is characteristic of the heavy industrial nature of the surrounding land uses. Pavement, buildings and structures cover nearly the entire Facility, with the only exceptions being a small landscape area near the main office and a few small isolated areas of plantings or exposed soil. General reference terms used to describe current areas of the Facility are as follows:

- Main Office Area – Portion of the Facility East of South Indiana Street containing the administrative offices and employee parking area. No production or waste management activities occur in the Main Office Area.
- North Yard – Located west of South Indiana Street and east of the concrete lined drainage channel, and bounded by East 26th Street to the north and railroad ROW to the south. The North Yard contains current battery recycling operations from battery breaking through lead refining.
- South Yard – Located west of South Indiana Street and east of the concrete-lined drainage channel, and bounded by the railroad ROW to the north and Bandini Boulevard to the south. The South Yard includes the lined rainwater retention pond (proposed for permitting as a Surface Impoundment), container storage areas for batteries destined for recycling, wastewater treatment plant, and warehouse and office buildings.
- West Yard – North of Bandini Boulevard and west of the concrete-lined drainage channel. The West Yard includes the primary truck entrance, scale and truck tire wash, and maintenance and storage facilities.

1.3 BACKGROUND

The existing stormwater system includes manholes, inlets and piping which DTSC has determined is ancillary to RCRA Interim Status Unit 46 (Unit 46), the Pump Sump at the Drop Out System. Details of the existing stormwater system were summarized in the Storm Sewer Inspection Report dated March 5, 2013 (Advanced GeoServices).

The existing stormwater system is summarized in Tables 1 and 2 and includes the following:

- 3,460 feet of underground piping;
- 80 feet of aboveground piping;
- 140 feet of inactive underground piping and trench drain;
- 36 manholes/inlets and catch basins; and,
- 1 pumping sump (excluding Unit 46 and Railroad Trench Drain).

Pipe depths (as measured at pipe invert) vary from approximately 3 to 7 feet below grade. Manhole/inlet depths vary from approximately 1.5 to 12 feet below grade.

The existing stormwater system has been isolated utilizing a temporary system to eliminate the introduction of liquids and other materials into the system. The temporary isolation is discussed further in the Temporary Stormwater Management Plan dated May 16, 2013, revised May 21, 2013. The Temporary Stormwater Management Plan was conditionally approved by DTSC on May 16, 2013 and shall be operational during implementation of this plan.

1.4 SCAQMD REQUIREMENTS

Work activities will be conducted in accordance with South Coast Air Quality Management District (SCAQMD) Rules 403, 1420 and 1420.1 and Exide's 1420.1 Compliance Plan dated January 2012. The 1420.1 Compliance Plan is provided in Appendix A.

2.0 SITE PREPARATION

2.1 NOTIFICATIONS

As required by SCAQMD Rule 1420.1, Exide will notify SCAQMD of the excavation activities at least 8 days prior to the excavation activities. In addition, Exide will provide a courtesy notification to the City of Vernon.

Portions of the stormwater system in the South and North Yards (see Plate 1) are reported to be constructed from asbestos cement pipe (33-inch and 36-inch diameter), a Class I non-friable Asbestos Containing Material (ACM) under SCAQMD Rule 1403. Prior to start of removal activities in this area a certified asbestos inspector shall conduct a survey of the pipe runs reported to be asbestos cement pipe to confirm their material of construction and Rule 1403 classification. If required under Rule 1403 Exide will make necessary notification to SCAQMD, and make necessary fee payments, a minimum of 10 days before the start of asbestos cement pipe removal activities.

A temporary occupancy permit will be required from BNSF – Los Angeles Junction Railway Company for work in the railroad right-of-way that bisects the facility.

2.2 DUST CONTROL

Excavation and construction activities are considered maintenance activities in accordance with SCAQMD Rule 1420.1. If soil handling activities are conducted outside of the excavation enclosure, the soil handling will be conducted in a negative air containment enclosure which is vented to a permitted negative air machine equipped with filter(s) rated by the manufacturer to achieve a 99.97% capture efficiency for 0.3 micron particles. As required by SCAQMD 1420.1, the in-draft velocity will be maintained at greater than 300 feet minute and will be determined by placing an anemometer at the center of the plane of any opening of the total enclosure. The enclosure will be established in the West Yard at the location shown on Figure 4-1. Actual size and configuration will be dictated by the selected Contractor based on his approach to the Work.

Because the work activities cannot be conducted in a negative air containment enclosure due to physical constraints, limited accessibility, and safety issues, the work will be conducted as follows:

- Work will be conducted within a partial enclosure (a structure comprised of walls or partitions on at least three sides or ¾ of the perimeter).
- Wet suppression or a vacuum equipped with a filter(s) rated by the manufacturer to achieve a 99.97% capture efficiency for 0.3 micron particles will be used at a location where the potential to generate fugitive lead-dust exists prior to, during and upon completion of the maintenance activity.
- 24-hour samples will be collected at the existing facility air monitors for every day that maintenance activity is occurring.
- Work activities will be stopped immediately when instantaneous wind speeds are greater than or equal to 25 mph.
- All lead-contaminated equipment and materials will be stored in a manner that does not generate fugitive lead-dust, or will be cleaned by wet wash or a vacuum equipped with a filter(s) rated by the manufacturer to achieve a 99.97% capture efficiency for 0.3 micron particles.

In the event that 24-hour sample results from the perimeter high volume samplers operated by Exide as part of SCAQMD Rule 1420.1 requirements exceed target lead concentrations (0.15 ug/m³) the Contractor will be required to increase dust control measures, such as the use of water sprays to control dust during excavation and handling of excavated materials, spray the geotextile over completed excavation areas and/or spray paved surfaces adjacent to the work zones.

Asbestos cement pipe is not expected to require cutting for removal and disposal. If the Contractor's removal and handling techniques require cutting with power tools or other techniques that could create dust containing friable asbestos Contractor shall conduct such activities in accordance with the requirements of SCAQMD Rule 1403(D).

Non-woven geotextile fabric will be placed over the entire completed excavation to function as a dust barrier for soil remaining in-place and to function as a permanent demarcation between remediated and unremediated soils.

2.3 AIR MONITORING

2.3.1 Facility Perimeter

As required by SCAQMD Rule 1420.1, 24-hour air monitoring will be conducted at the existing facility air monitoring locations for each working day. Air monitor locations and procedures are provided in the facility's Ambient Air Monitoring Plan in Appendix B.

2.3.2 Work Area Perimeter

Continuous real-time particulate (dust) monitoring will be conducted during the work at two locations at each excavation: one at the enclosure entrance, and one at the opposite end of the enclosure. Monitoring will be conducted using an aerosol monitor such as a DustTrak Aerosol Monitor or equivalent. Manufacturer's information for the DustTrak monitor is provided in Appendix C. Readings will be taken continuously with an hourly average and compared to the action levels. Field staff will spot check the monitor on an approximately hourly basis and will record the observations on the form provided in Appendix D. Data will be downloaded from the datalogger on the monitor at the end of the working period each day. The aerosol monitor will be calibrated and maintained as recommended by the manufacturer.

The air monitoring performance standard for the Site perimeter will be 0.15 $\mu g/m^3$ for lead (NAAQS) and 3.0×10^{-3} $\mu g/m^3$ for arsenic (USEPA RSL). The targeted maximum particulate levels measured at the perimeter of the work zone (outside of the enclosure) will be set based on the same concentrations with the expectation that by achieving these levels at the work zone Exide will maintain compliance at the Site perimeter high volume monitors. The action level for real-time particulate (dust) monitoring will be calculated for each pipe run (section of pipe

running between structures) using the concentrations observed in the pre-removal sampling. The calculation used will be:

$$Total\ Allowable\ Particulate\ (\mu g/m^3) = \frac{particulate\ concentration\ action\ level\ (\mu g/m^3)}{particulate\ of\ concern\ concentration\ (expressed\ numerically)}$$

2.3.3 Personal Air Monitoring

Personal air monitoring will be conducted as discussed in Section 7.0.

2.4 DECONTAMINATION

All personnel and equipment will be decontaminated using wet methods prior to exiting the enclosure at the work area. Wash water created during decontamination activities shall be sent to the on-site wastewater treatment system for treatment. Sediment created during decontamination shall be managed with the sediment removed from the existing stormwater system.

3.0 SAMPLING

3.1 TYPES OF SAMPLING

In order to expedite stormwater system removal and replacement, soil sampling will be conducted before and after removal of the existing system. Pre-removal soil sampling will consist of 10 feet deep direct push (Geoprobe® or similar) borings completed around the existing stormwater system structures and along the alignment of the existing and proposed pipes. Following removal of the existing pipes and structures, post-removal soil sampling of the remaining bedding and subbase soils will be conducted.

Information obtained from both the pre and post-removal sampling will also provide data in support of closing (or partially closing) the existing stormwater system as ancillary equipment for Interim Status Unit 46. The approach to sampling presented below and described in greater detail in the SAP is intended to satisfy the DTSC *Permit Writer Instructions – Closures, Section 3.8 "Closure Plan Content and Technical Review"*.

3.2 PRE-REMOVAL SOIL BORINGS

Pre-removal soil borings will be located at approximately 12 to 18 inches from the wall of the existing pipe and outside walls of the existing structures at the locations shown on SAP Plate 1. The borings around the structures were selected to provide coverage on those sides of the structures not connected to the piping. The borings along the alignment were selected to coincide with areas of damage, standing liquids and notable accumulations of sediment identified in the stormwater system inspection report. Pre-removal soil borings will also be completed along those portions of the alignment of the replacement stormwater system where the existing system is not sufficiently close to provide an indication of subsurface condition.

The primary purpose of the pre-removal soil borings is to identify the type and character of the subsurface materials that will require excavation and handling during removal of the existing stormwater system and installation of the new stormwater system. This will be achieved through

a combination of visual classification, field screening and laboratory analysis. Continuous direct push borings will provide the opportunity to log the entire profile from the ground surface to 10 feet below ground surface (bgs).

In addition to serving their primary purpose, the soil borings will also provide an initial indication of impacts that may have been caused by leakage from the existing stormwater system. The most prominent indicator of leakage from the stormwater system will be wet/saturated conditions in the pipe bedding material at the invert of the pipe near the leakage point. If the sediment moving through the stormwater system contains elevated levels of lead, the impacts associated with leakage from the pipe would be elevated concentrations of lead in the pipe bedding caused by the sediment deposition and/or adhesion to soil particles in the pipe bedding.

The subsurface profile is expected to consist of the following materials:

- Pavement – Existing pavement is asphalt or concrete. Typical thickness is expected to vary from 8 to 14 inches. During pre-removal sampling, samples of the pavement will be collected from the top 1.5 +/- inches, at the frequency of one sample per 250 square feet of pavement. If varying layers of pavement are encountered (such as asphalt over concrete) separate samples will be collected from each layer.
- Pavement Subbase – Located immediately beneath pavement. This material is typically crushed stone or similar materials imported at the time the site was paved. Imported pavement subbase is expected to be visually distinct from native soils and from slag fill materials. Pavement subbase would not have been impacted by leakage from the stormwater system because it is located above the crown of the pipe, therefore; samples of the pavement subbase for analysis will be collected from approximately 1/4 of the borings. Depth and interval of pavement subbase samples will be dictated by the thickness of the pavement and subbase material encountered.

- Backfill and Bedding Material – Backfill and bedding material is the fill placed immediately beneath (bedding) and around (backfill) the pipe and structures at the time of installation. For the purpose of the pre-removal soil sampling the backfill and bedding material is expected to extend from 12 inches below the pipe invert up to the underside of the pavement subbase. The backfill and bedding material is expected to have been derived from excavation spoils created during installation of the existing stormwater system. Samples will be collected from all of the soil borings along the pipe alignment at intervals corresponding to 6-inches above to 6-inches below the crown of the pipe and from 0 to 12 inches below the invert of the pipe. Samples collected from the soil borings adjacent to the structures will correspond to the crown of the lowest pipe entering/exiting the structure and 0 to 12 inches below the invert of the structure. Leakage from the pipe or structure would be observed in the form of wet soil conditions and elevated lead concentrations in the sample from beneath the invert of the pipe or structure. If oil or organic compounds entered the stormwater system and subsequently leaked they would be expected to be observed as staining, odor or elevated PID readings in the bedding material.
- Subsoils – Subsoil is the general term being applied to all soils beneath the bedding material. This would be the material that remained in-place at the bottom of the excavation when the original stormwater system was installed. The material will be either native soils (quaternary alluvium) or fill materials depending on the depth of original excavations relative to the thickness of pre-existing fill overlying the native soils. Soil samples for laboratory analysis will be collected from the depth interval corresponding to 12 to 24 inches below the invert of the existing pipe or structure and from the final 12 inches of the 10 feet deep boring.

Samples collected from the pre-removal soil borings will be field screened for VOCs using a PID and for total lead using an XRF. Samples exhibiting a PID measurement > 10 ppm above ambient background, or exhibiting odor or staining will be selected for laboratory analysis for

VOCs, PAHs and TPH. Ten percent of samples screened using the XRF will be submitted for laboratory analysis for CAM-17 metals, plus aluminum.

Soil samples collected from borings located along the west side of RMPS between existing structures MH-7 and MH-2 will be screened for residual gamma emitting radionuclides above background using a Geiger counter. Background levels will be established by obtaining readings on similar soil types during borings in the South Yard. DTSC shall be notified of measurements > 11.4 micro-R/h (the unrestricted public exposure level (10 CFR 20.1301)). Consultation with a Certified Health Physicist will be required before performing stormwater system removal in this area when readings are above the occupational exposure level of 570 µR/hr (10 CFR 20.1201) Results of the pre-removal soil samples will be sorted based on material type, depth and location. Borings completed along the alignment of the pipe will be interpreted as being representative of both sides of the pipe. Exide's Contractor will excavate materials over and around the existing pipes and structures as necessary to conduct stormwater system removal and replacement in a safe and efficient manner. Unless subject to physical constraints, the minimum width of soil remediation along pipes and structures shall be 1.5 feet. The Contractor will segregate soil materials based on total lead concentrations (as identified during the pre-removal soil sampling) into material with <320 mg/kg, materials with 320 mg/kg to 1,000 mg/kg and materials with >1,000 mg/kg. See Section 4.0 for greater detail regarding excavations.

3.3 POST-REMOVAL SOIL SAMPLES

Once the pipes and structures are removed to the top of the existing bedding materials and the excavation properly protected (i.e., trench boxes, slopes or benching for excavations >4 feet deep), a Sampling Technician will enter the excavation. The Sampling Technician will visually evaluate the bedding for areas of wetness, saturation, staining or odor and to determine if the materials are imported fill (such as crushed stone), native soils (quaternary alluvium), slag fill or some other material. The Sampling Technician will take direct XRF readings for lead on the bottom and accessible side walls of the excavation at locations corresponding to the structures and pipe joints (est. 10 to 20 feet based on pipe material). Additional soil removal will be performed as necessary to remediate impacts associated with leakage from the stormwater

system (up to 10 feet below ground surface) and to achieve the subgrade elevations for the replacement stormwater system. Additional excavation spoils will be segregated based on visual appearance and the direct XRF readings, with appropriate correction factors developed during the pre-removal soil sampling.

After remediating impacts associated with leakage from the stormwater system and completing excavation for the replacement stormwater system, the sampling technician will collect post removal soil samples from 0-12 and 12-24 inches below the bottom of the excavation. Post-removal soil samples will not be collected within those areas underlain by slag fill. Post-removal soil borings will be located approximately every 40 feet along the alignment of the original pipe and beneath each structure. Additional sample locations (more frequent than every 40 feet) will be added to those locations where indications of leakage were observed during the Sampling Technician's original evaluation of the bedding following removal of the pipes and structures. Procedures for sample collection, field screening and laboratory analysis are provided in the Sampling and Analysis Plan (SAP) (Appendix E).

4.0 EXCAVATION

4.1 GENERAL

All stormwater pipes and structures, and Surrounding Soils will be excavated, except where inaccessible due to existing structures, liner systems or similar impediments. The location of stormwater pipes proposed for removal or abandonment in-place is provided on Figure 4-1.

Soil remediation will be conducted to no less than 1.5 feet on either side of the existing pipes and structures. Material segregation shall be conducted based on the results of the pre-removal sampling discussed in Section 3.0. The most likely excavation volume is estimated to be approximately 5,000 cy based on average excavation limits 8 feet deep and 1.5 feet beyond the outside wall of the existing pipe.

Removal shall be completed utilizing means and methods that minimize disturbance of the bedding layer beneath the pipes and structure. Such techniques are expected to consist of excavating soil on both sides of the pipe or structure to the invert using a hydraulic excavator; separating the pipe into sections at their joints and then lifting out the pipe sections and structures using chains or straps. The location of pipe joints shall be marked on the bottom or sidewalls of the excavation using flags, stakes or similar techniques. Those portions of the existing stormwater system slip-lined with fiberglass (primarily, if not exclusively the corrugated metal pipe) will need to be field cut through the slip lining to allow removal in sections. Although not anticipated, if the asbestos cement pipe requires field cutting, specific requirements under AQMD Rule 1403 may be triggered including requirements for notification and specific removal procedures to limit/control airborne particulates.

Excavation will occur within enclosures using appropriately sized construction equipment which can operate within the confines of the enclosure. The enclosure width is expected to be 20 feet wide due to site constraints. The enclosure length is expected to consist of multiple sections to allow "leap frogging" of sections as work progresses. Select areas, such as east of the Finished Lead Building, within the Finished Lead Building and within the Baghouse Building will require

special care to protect existing buildings and equipment. Exide will provide the Contractor access to potable water for use in dust suppression. The adequacy of dust suppression will be determined based on visual observations, real-time dust monitoring and results of the facility perimeter high volume air monitors which must be operated every day while intrusive excavation activities are being performed.

4.2 SEQUENCE

Removal of the existing stormwater system will begin at the Pump Sump (Interim Status Unit 46) or at Inlet H in the West Yard and progress up-slope. It is anticipated that removal of the pipes and structures will be conducted within the limits of the enclosure, the completed excavation will be covered with geotextile fabric and then the portion of the enclosure covering the completed and covered excavation will be moved to the next location. The enclosure will not be removed from an area until the enclosed excavation has been covered with geotextile.

Removal of the existing stormwater system will be performed in advance of installation of the replacement system. The Contractor will be required to complete installation of the replacement system following removal of the existing system. In an effort to limit the amount of time completed excavation areas remain open, installation of the replacement system is expected to follow removal activities by one to two weeks. Details and specifications for the proposed system are provided in the Stormwater Management System Replacement Plan, provided under separate cover.

4.3 LIQUID REMOVAL

Liquids within the pipe will be removed by pumping at the down-gradient manhole immediately prior to excavation in the section of pipe within the enclosure. If the liquids are suspected to be present at isolated locations within the pipe, locations containing liquid will be accessed from either the top of the pipe or from the end of the pipe and the additional liquid removed. Water will be transferred to the on-site WWTP for treatment. Any liquids encountered during pipe

removal and decontamination water will also be removed by pumping and transferred to the WWTP for treatment.

If all liquids cannot be removed from a section of pipe, the Contractor shall seal the downslope end of the pipe with a temporary plug to prevent the leakage of liquid from the pipe. If liquid leakage occurs from the pipe, the Contractor shall immediately remove saturated soil, sediment and standing liquid from the area of spillage and the area shall be marked for sampling as part of the post-removal sampling activities.

4.4 EXCAVATION

Surrounding Soils are defined as soils within the pipe alignment, plus 1.5 feet on either side of the external pipe perimeter and structures, and up to ten feet below ground surface that are above the CHHSL lead in industrial soil standard of 320 mg/kg and reasonably attributable to the stormwater system. Following removal of the pipes and structures the bottom and sidewalls shall be evaluated and sampled as described in Section 3.3. Additional excavation, up to 10 feet below ground surface, will be completed in those areas identified using the XRF as having total lead concentrations >320 mg/kg or exhibiting odor or staining associated with the stormwater system. Additional excavation will not be required to chase impacts not associated with the stormwater system.

Exide acknowledges that at the time of site closure or completion of Corrective Action, land use restrictions will be necessary if unrestricted land use criteria (residential) cannot be achieved. In addition, the entire facility is already subject to regular (quarterly) groundwater monitoring and such monitoring is expected to be required following facility closure if waste materials remain in-place.

It is anticipated that excavated materials will be selectively removed and segregated into the following categories during excavation activities:

- Concrete Pavement;

- Asphalt Pavement;
- Contaminated soils (> 1,000 mg/kg total lead);
- Contaminated soils (>320 mg/kg total lead, <1,000 mg/kg total lead);
- Clean soil and crushed aggregate (<320 mg/kg total lead);
- Pipe and structures;
- Sediment within pipes; and
- Liquids within the pipes

Segregation activities will be performed based on results of soil sampling performed in advance of stormwater system removal activities; field screening performed using an XRF at the time of excavation and visual observations. Excavated soils/materials will be placed in a roll-off or small dump truck. All roll-off containers used for storing hazardous waste shall comply with the container requirements under CCR 25200.19. Hazardous waste will not be staged in dump trucks. Once filled, the roll-off or dump truck will be covered before leaving the enclosure and then transported to the Temporary Soil Management Enclosure (if further handling is required) or staged on-site (roll-offs only) until approved for final disposition. Final disposition (haz vs. non-haz) of excavated materials destined for off-site disposal will be based on results of waste stream characterization sampling to be conducted at the time of pre-removal sampling, or as additional waste streams are identified during implementation of the ERIMWP. Analytical parameters required for disposal characterization will be dictated by the prospective disposal facility, but at a minimum are expected to include TTLC and TCLP/STLC metals and TCLP VOCs.

Where unexpected pipes connected to the stormwater system are encountered in the field, the pipe will be removed to its point of origin.

Excavations will be conducted in accordance with Article 6 (Excavation) of the Cal-OSHA Construction Safety Orders and the Contractor's site-specific Health and Safety Plan.

Pipes confirmed to be asbestos cement (Transite) shall be removed to the extent possible without mechanical cutting or grinding. Contractor personnel performing Transite pipe removal shall have current training Asbestos Cement Pipe Worker training appropriate for removal and handling such materials.

4.5 POST REMOVAL SOIL SAMPLING

Following pipe and structure removal, post removal soil sampling will be conducted along the bottom of the excavation, except where the excavation terminates in slag fill material. Post removal soil sampling will consist of visual evaluation, field screening (XRF and PID) and sample analysis of the soils immediately beneath the pipes and structures. See Section 3.3 and the Sampling and Analysis Plan (Appendix E) for more detail.

XRF screening results will be used to determine whether additional excavation is necessary. Those areas with total lead concentrations >320 mg/kg not attributable to slag fill will be subject to additional excavation and resampling. The limits of additional excavation will be determined in the field based on the XRF screening results. Soils subject to XRF screening shall not be saturated or have soil moisture contents >20%. Moisture content values obtained during the pre-removal soil sampling shall be utilized to estimate naturally occurring moisture content. Personnel conducting the XRF screening shall qualitatively evaluate field conditions for consistency with pre-removal conditions. Correction factors developed based on the pre-removal XRF screening shall be applied during post-removal XRF screening.

4.6 RESTORATION

A 4-ounce per square yard (minimum) non-woven geotextile such as U.S. Fabrics US100NW will be placed on the bottom and sidewalls of the excavation immediately following the completion of excavation to provide dust control. Geotextile information is provided in Appendix F. The geotextile will also provide a clear demarcation of existing removal limits should future soil removal be conducted outside of the remediated pipe alignment.

Once the geotextile is installed, the enclosure will be moved to the next location. The geotextile does not represent final restoration. Final restoration is detailed in the Stormwater System Replacement Plan. The geotextile will remain in-place after installation of the Replacement system.

If permanent stormwater system piping is proposed to be installed at the removal location, the trench will be allowed to remain open for installation of the proposed pipe. The proposed stormwater system piping is provided in the Stormwater System Replacement Plan.

If permanent stormwater system piping is not proposed to be installed at the removal location, the excavation will be backfilled in compacted lifts with clean soils and aggregate segregated during soil excavation activities or imported fill. Backfill will be conducted in accordance with the Storm Sewer Replacement Plan.

Figure 4-2 summarizes restoration activities.

4.7 INACCESSIBLE AND RESTRICTED LOCATIONS

The following pipe locations shown on Figure 4-1 have been determined to be inaccessible:

- Oxidation Tank secondary containment area (approx. 30 lf);
- Soda ash silo (approx. 24 lf);
- Southwest corner of RMPS loading dock (approx. 34 lf); and
- South end of the Reverb Furnace Feed Room (approx. 43 lf and 72 lf).

Where stormwater pipes remain in-place because of inaccessibility, accumulated sediment and debris within those portions of the pipe remaining in-place will be removed to the extent possible. The pipe to be abandoned will be blocked at both ends and will be grouted in its entirety to prevent the entry of water. Grout will be non-shrinking cementitious grout. The location of the pipe abandoned in-place will be field measured for inclusion in the as-built drawings.

Where pipe removal is completed, but restrictions present complete removal of soils greater than 320 mg/kg total lead, the limits of soil remaining in-place will be recorded for inclusion in the as-built drawings.

Based on initial conversations with the BNSF railroad, it appears that Exide will be granted access to conduct an open cut excavation beneath the existing tracks for the purpose of removing and replacing the existing pipe.

5.0 WASTE MANAGEMENT AND DISPOSAL

Excavated soil and pipe system components shall be placed in roll-off containers or dump trucks with sealed water-tight gates. Roll-off containers destined for off-site disposal shall be sampled for characterization purposes as required by the disposal facility before leaving the excavation enclosure. After sampling, the roll-off shall be covered with a water-tight tarp, labeled with appropriate labeling (including accumulation date) and placed in a roll-off staging area to await results of characterization sampling. Stormwater system piping and structures shall be covered before leaving the excavation enclosure and transported to the permitted Reverb Furnace Feed Room and Corridor where remaining sediment shall be removed and sent for lead-recovery on-site. Metal piping, inlet grate and frames and similar materials will be segregated and utilized as flux within the lead recycling process. Remaining system components shall be pressure washed to remove residual materials, sized by crushing or cutting (except for Transite piping) and placed in a sealed roll-off for characterization and off-site disposal. Clean soils and crushed aggregate may be stockpiled in the excavation areas (on top of the geotextile layer) to await reuse as backfill. Stockpiles shall be covered with 6-mil plastic sheeting.

Excavated soils and materials will be sampled for disposal characterization as discussed in the Sampling and Analysis Plan in Appendix E. Disposal will occur at facilities that are permitted to accept the waste type.

RCRA non-hazardous materials will be disposed at US Ecology in Beatty, Nevada or La Paz landfill in Arizona. RCRA hazardous materials will be disposed at US Ecology in Beatty, Nevada.

6.0 SCHEDULE

Stormwater system removal, including the Surrounding Soil and associated sampling, will be completed by 150 days after DTSC approval of this Work Plan and associated Temporary Authorization.

The tentative sequence of stormwater system removal activities is as follows:

- Pump Sump (Unit 46) to Inlets E, D, D-1. Stop at south side of railroad tracks.
- Pump Sump (Unit 46) to 15" diameter HDPE pipe at concrete drainage channel.
- Crossing beneath railroad, once BNSF approval is received.
- North side of railroad track to MH-6, to Proposed MH-6A, MH-7, MH-2 and CL-16.
- Inlets at RMPS Loading Dock and West of Corridor.
- MH-2 to MH-1. EX-18 to EX-17 to CL-2 to MH-1.
- Proposed alignment MH-2 to CL-2.
- CL-14 to CL-5 to CL-6 to CL-15.
- Inlet D to C to B to A.
- Inlet H to K and J. Inlet H to G to F.*

*Note: Contractor may propose to perform removal and placement activities along the pipe run from Inlet H to K and J, and Inlet H to G to F, prior to starting at Pump Sump (Unit 46).

Excavations within the Finished Lead Warehouse MH-1 to CL-14 will be scheduled to occur over a weekend to minimize disruption to shipping vehicles. Excavations within the Baghouse Building will be coordinated with facility operations.

7.0 HEALTH AND SAFETY

Health and safety procedures, including the use of personal protective equipment and personnel air monitoring, will be implemented by the Contractor during the work. The Contractor will prepare a site-specific Health and Safety Plan which meets the requirements established in Specification 01545 in the Stormwater Management System Replacement Plan. All contractors which conduct work at the facility are also required to comply with the General Environmental, Health & Safety Rules and Regulations for Contractors and Subcontractors Working at Exide Technologies dated November 30, 2011 provided in Appendix G.

8.0 COST ESTIMATE

A cost estimate for stormwater system removal, including Surrounding Soil removal, and sampling is provided in Appendix H.

9.0 REPORTING

A Stormwater System Removal Action Completion Report will be prepared following completion of removal. The report will include the following:

- Narrative;
- Tables summarizing off-site disposal;
- Copies of disposal manifests and certificates of disposal;
- Pre-excavation sample results;
- Pre-excavation sampling boring logs certified by a California Professional Geologist;
- Post-excavation screening and sample results;
- Figure depicting pre and post-excavation screening/sample locations;
- Figure providing final horizontal and vertical excavation limits and the location of pipes abandoned in-place; and,
- Certification by a California Professional Engineer.

10.0 MODIFICATIONS

Exide may request a modification of this plan to DTSC for review and approval if conditions warrant.

TABLES

TABLE 1
EXISTING STORM SEWER UNDERGROUND PIPE SUMMARY
EXIDE TECHNOLOGIES, VERNON, CALIFORNIA

Existing Pipe Run Name	Existing Pipe Diameter (in) [1]	Length(ft)	Comments
F - G	12" / 10"	228	
K - H	12" / 10"	76	
J - H	10" / 9 "	119	
H - E (Buried Structure)	15"	140	Inactive/abandoned. Pipe alignment is above closed channel, below open channel (GNB DRAWING No 39-724-105).
E (Buried Structure) - Unit 46	36" / 32"	8	
D - Unit 46	36"	80	
Inlet North of E to D-E	6"	10 approx.	Location unknown
C-D	12" / 10"	162	
B-C	12" / 10"	162	
A-B	12" / 10"	158	
D-1 - D	36"	25	D-1 is Inlet North of D
Pump - D-1	4"	10	Remove pipe and pump.
MH-6 - D-1	36"	105	
MH-7 - MH-6	36"	135	Not field confirmed at MH-6. Partially abandoned inplace beneath RMPS Loading Dock (35 ft) and Reverb Feed Room (45 ft).
CL-16 - MH-7	24" / 21"	255	
MH-2 - MH-7	33"	228	
MH-1 - MH-2	33"	270	Partially abandon in-place beneath Soda Ash Silo (25 ft) and Oxidation Tank Secondary Containment (25 ft)
CL-14 - MH-1	24" / 21.5"	152	Excavation within Finished Lead Building
CL-5 - CL-14	24" / 21.5"	113	
CL-6 - CL-5	24" / 21.5"	139	
CL-15 - CL-6	24" / 21.5"	137	
CL-2 - MH-1	42"	123	
EX17 - MH-2	18"	42	
EX18 - EX17	18"	51	
MH-6 - CL-8	24"	220	SW Corner Baghouse Building. Partially abandon in-place beneath Reverb Feed Room (70 ft).
CL-8 - Catch Basin	unknown	110	SW Corner Baghouse Building. Abandon in-place under Reverb Feed Room.
CL-2 - doorway	18"	60	
Doorway trench - CL-1	18"	80	NW Corner Baghouse Building
CL-3 - NE Corner Baghouse	unknown	50	NE Corner Baghouse Building
South of MH-1 - NE Corner Baghouse	unknown	50	NE Corner Baghouse Building
CL-7 - SE Corner Baghouse	unknown	60	SE Corner Baghouse Building
RMPS Loading Dock North - RMPS Loading Dock South	unknown	45	
West of Corridor North - West of Corridor South	unknown	25	
		3618	
		200	Abandoned in-place (lf, approximate)
		3418	Excavated (lf, approximate)

Notes:
1. Existing pipe diameter: Original diameter / Lined diameter.
2. Additional pipes may be encountered in the field.

TABLE 2
EXISTING MANHOLE AND INLETS
EXIDE TECHNOLOGIES
VERNON, CALIFORNIA

Inlet/Manhole ID	Structure Size	Grate Size	Inlet Depth
F	4' diam. Concrete	2' diam.	5.5'
G	4' diam. Concrete	2' diam.	6.8'
H	5' diam. Concrete	open top	6.8'
K	4' diam. Concrete	2' diam.	4'
J	4' diam. Concrete	2' diam.	4.3'
E (Buried manhole west of Unit 46)	unknown	Buried	unknown
Inlet North of 46	18" x 18"	24" x 24"	2'
D			7.6'
C	4' diam. Concrete	2' diam.	6.4'
B	4' diam. Concrete	2' diam.	5.7'
A	4' diam. Concrete	2' diam.	5.1'
D-1 (Inlet North of D)			7.6'
MH-6			12 ft approx
MH-7			5.6'
CL-16	4' diam. Concrete		2.3'
MH-2	4' diam. Concrete	2' diam.	6.6'
MH-1	24" x 24"	28" x 30"	24"
CL-14	30" x 24.5"	24" x 24"	2'
CL-5	24" x 24"		2.7'
CL-6	24" x 24"	29" x 24"	2.8'
CL-15	24" x 24"	29" x 24"	2.7'
CL-2	4' diam. Concrete		1.7'
EX-17	4' diam. Concrete		1.3'
EX-18	4' diam. Concrete		1.5'
North RMPS Loading Dock		2'x10'	unknown
South RMPS Loading Dock	24" x 24"	26" x 26"	2'
North - West of Corridor	24" x 24"		unknown
South - West of Corridor	24" x 24"		unknown
CL-8		2' diam.	unknown
West Baghouse Building	24" x 24"		unknown
CL-1	24" x 24"		unknown
CL-3	24" x 24"		unknown
NE Baghouse Building		2' diam.	unknown
South of MH-1		2' diam.	unknown
CL-7	24" x 24"		unknown
SE Baghouse Building	24" x 24"		unknown

FIGURES

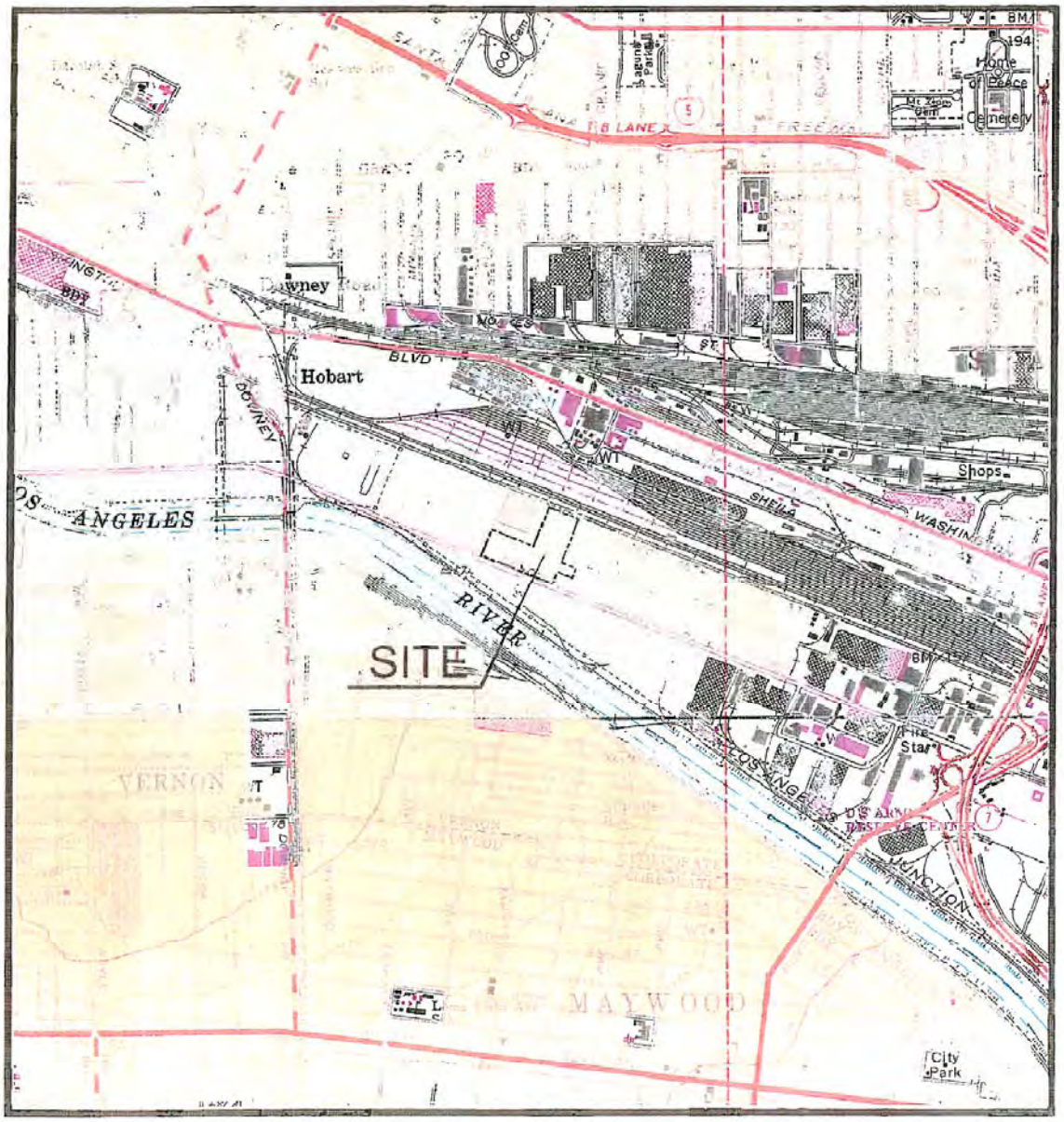

SCALE 1:24000

1 MILE

1000 0 1000 2000 3000 4000 5000 6000 7000 FEET

1 KILOMETER

QUADRANGLE LOCATION

Contour interval: 20 feet
Source: Composite of Los Angeles & South Gate, California, 7.5 Minute Series, U.S.G.S. Topographic Maps

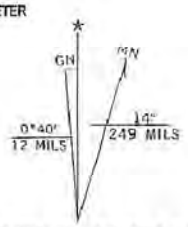

UTM GRID AND 1994 MAGNETIC NORTH DECLINATION AT CENTER OF SHEET

NOTE:

1. ADAPTED FROM LAKE ENGINEERING FIGURE 1.1 FROM PART B APPLICATION, MAY 2002.

ADVANCED GeoServices

Engineering for the Environment. Planning for People.™

1055 ANDREW DRIVE, SUITE A, WEST CHESTER PA, 19380
tel 610.840.9100 fax 610.840.9199 www.advancedgeoservices.com

FACILITY LOCATION MAP

EXIDE TECHNOLOGIES
VERNON, CALIFORNIA

SCALE:	N.T.S.	FIGURE
PROJECT NUMBER: 2013-2967-01		1 – 1
DATE:		

F:\Projects\2013\20132967 - Exide Vernon Interim Status Suspension\Cad\Figure 1-1 - Stormsewer.dwg, FIGURE 1-1

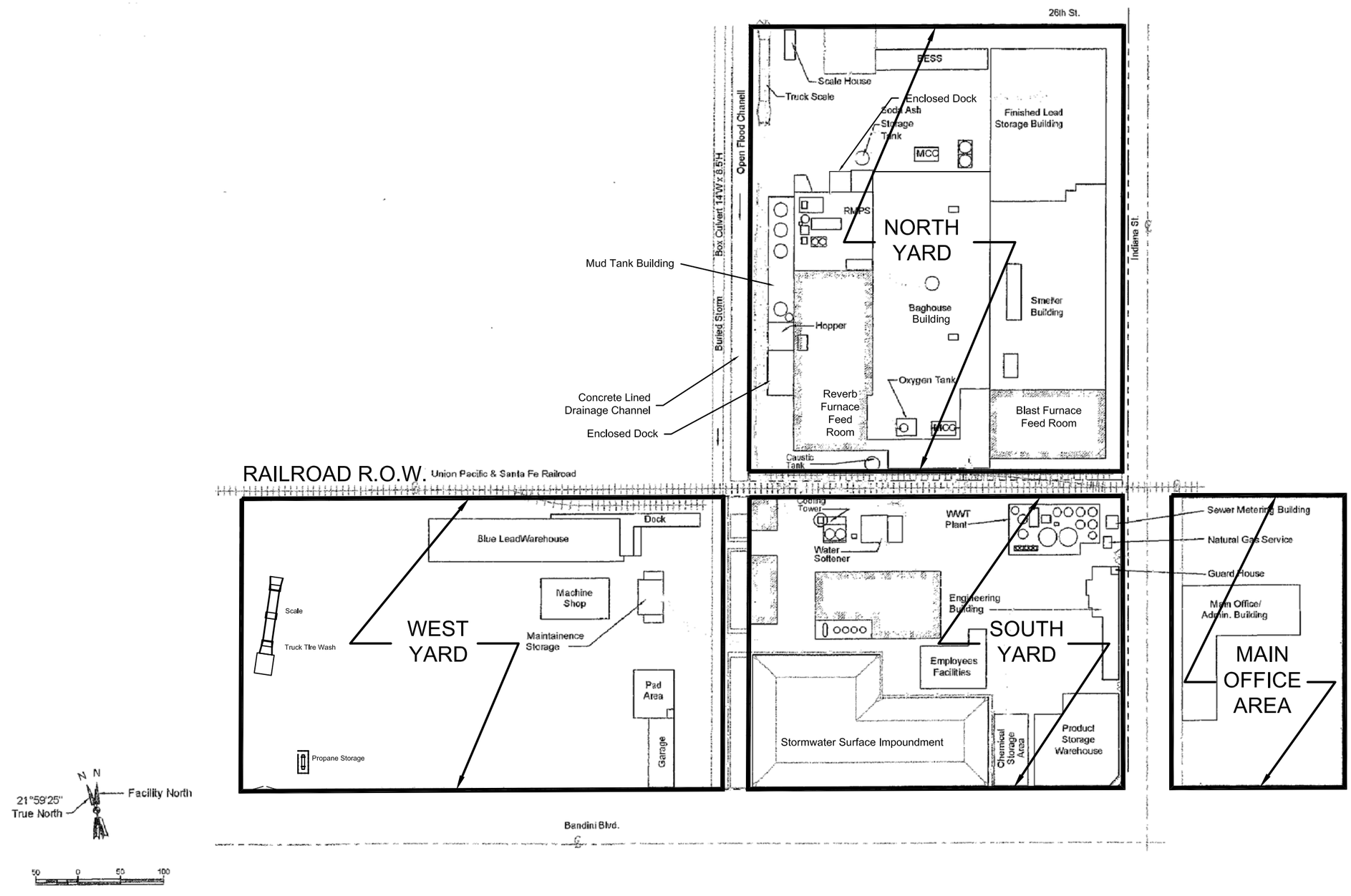

NOTE:

1. ADAPTED FROM LAKE ENGINEERING FIGURE 2.8 FROM PART B APPLICATION, MAY 2002.

ADVANCED GeoServices

Engineering for the Environment. Planning for People.™

1055 ANDREW DRIVE, SUITE A, WEST CHESTER PA, 19380
tel 610.840.9100 fax 610.840.9199 www.advancedgeoservices.com

GENERAL SITE LAYOUT

Exide Technologies
Vernon, California

SCALE:	N.T.S.	Figure
PROJECT NUMBER: 2013-2967-01		1-2
DATE:		

F:\Projects\2013\20132967 - Exide Vernon Interim Status Suspension\Cad\Figure 1-2 Stormsewer.dwg, Figure 2-1

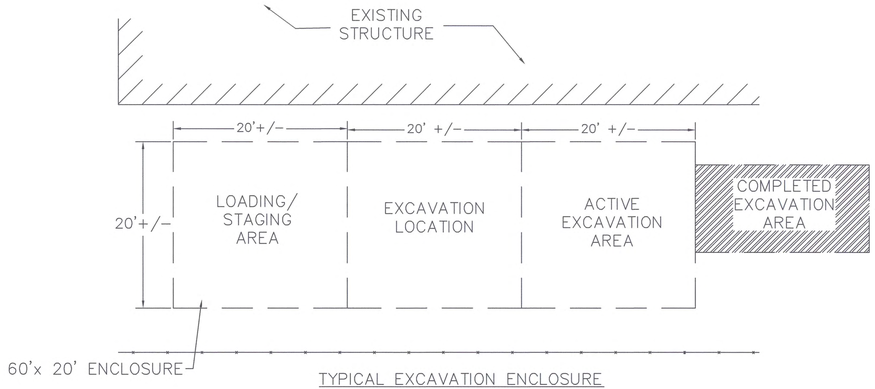

TYPICAL EXCAVATION ENCLOSURE
NTS

NOTES:

1. BASEMAP ADAPTED FROM MOLLENHAUER GROUP ALTA/ACSM LAND TITLE SURVEY DATED FEBRUARY 28, 2006.
2. FACILITY IMPROVEMENTS SINCE FEBRUARY 28, 2006 ARE NOT SHOWN OR ARE APPROXIMATE.
3. PIPE LOCATIONS, DIAMETERS, AND MATERIALS SHALL BE FIELD CONFIRMED.
4. STORMWATER MANAGEMENT SYSTEM INFORMATION SHOWN FROM FEBRUARY 28, 2006 MOLLENHAUER GROUP ALTA/ACSM LAND TITLE SURVEY; SEPTEMBER 15, 1983 SOUTH YARD PAVING PLAN, 39-000; NOVEMBER 7, 1980 SITE DEVELOPMENT PLOT PLAN, PLANT SITE PAVING AND DRAINAGE, DC-104; FEBRUARY 1998 NORTH YARD PLAN, DC-104-T; FEBRUARY 1998 SOUTH YARD PLAN, 39-724-100; FEBRUARY 1998 WEST YARD PLAN, 39-724-101 AND FIELD OBSERVATIONS PROVIDED BY EXIDE.
5. STORMWATER SYSTEM FIELD CONFIRMED BY ADVANCED GEOSERVICES TO EXTENT PRACTICAL ON SEPTEMBER 18, 2012.
6. * INDICATES ELEVATION CALCULATED USING DESIGN INVERT AND FIELD TG ELEVATION AND SUMP DEPTH.

GRAPHIC SCALE

40 0 20 40 80 160

(IN FEET)
1 inch = 40 ft.

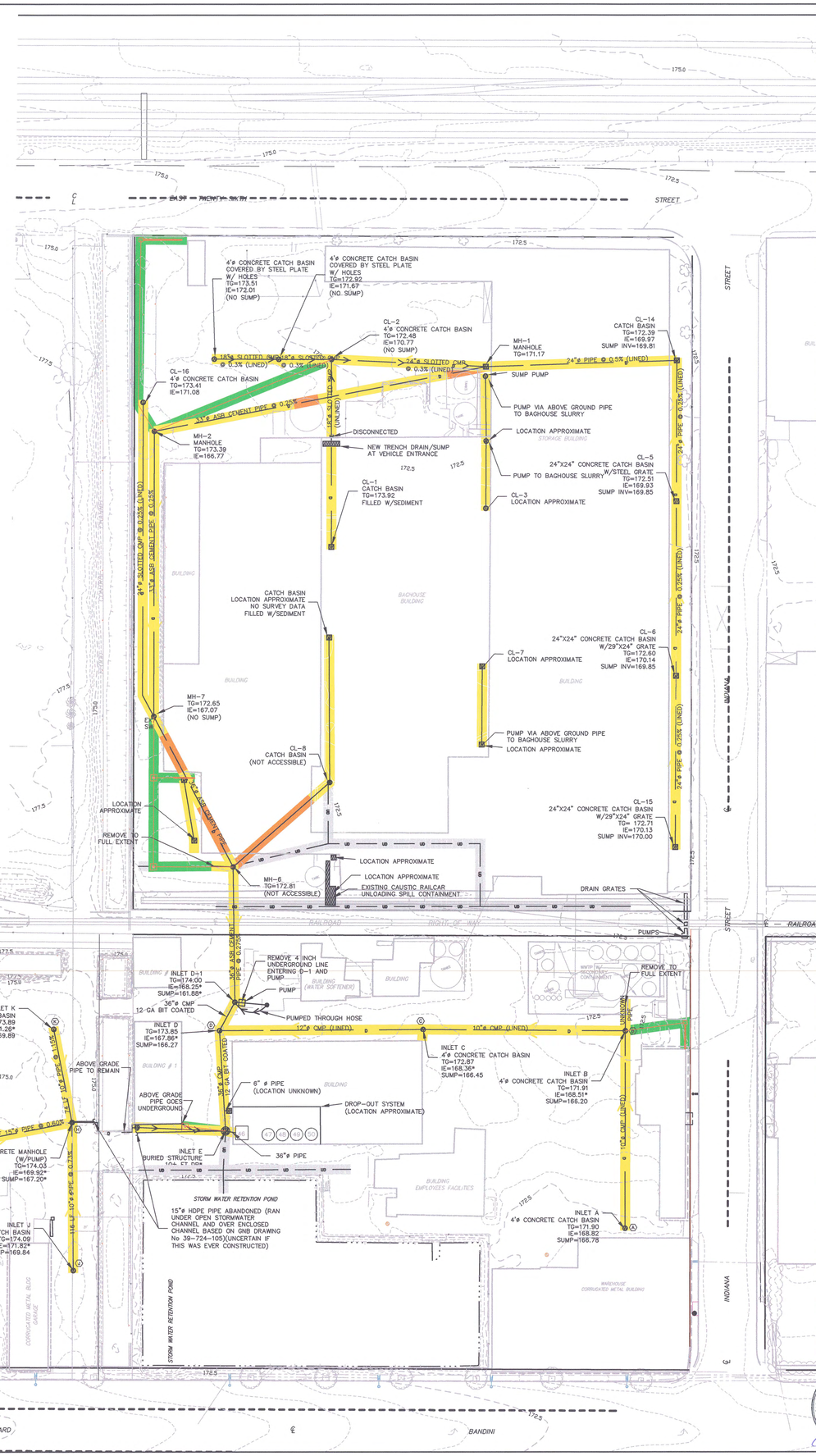

DATE:	REVISION:
6-28-13	REVISED PER DTSC COMMENTS

LEGEND:

- BLACKTOP
- BUILDING LINE
- CHAINLINK FENCE
- METAL FENCE
- CONTOURS
- RAIL ROAD
- STORM SEWER PIPE
- CATCH BASIN
- CATCH BASIN
- STORM SEWER MANHOLE W/SOLID LID
- EXCAVATE
- ABANDON IN-PLACE
- EXCAVATE FOR PROPOSED PIPE
- HISTORIC PIPES AND STRUCTURES TO BE VERIFIED DURING UTILITY LOCATION

ADVANCED GeoServices
Engineering for the Environment. Planning for People.™
1055 ANDREW DRIVE, SUITE A
WEST CHESTER, PENNSYLVANIA 19380

EXIDE TECHNOLOGIES
VERNON, CALIFORNIA

EXCAVATION PLAN

REGISTERED PROFESSIONAL ENGINEER PAUL GERARD STRAUB NO. C61595 EXP. 6/30/15 CIVIL STATE OF CALIFORNIA

Scale:	1"=40'
Originated By:	D.J.S.
Drawn By:	D.J.S.
Checked By:	J.W.D.
Project Mgr.:	P.G.S.
Project No.:	2013-2967
Sheet No.:	FIGURE 4-1
Issued:	JUL 12 2013

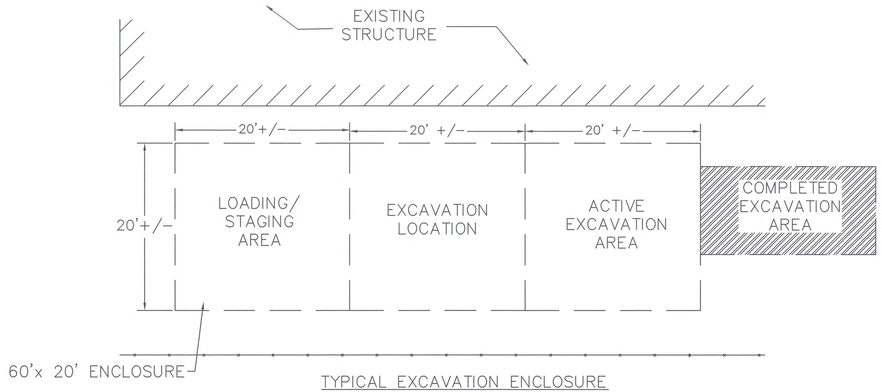

TYPICAL EXCAVATION ENCLOSURE
NTS

NOTES:

1. BASEMAP ADAPTED FROM MOLLENHAUER GROUP ALTA/ACSM LAND TITLE SURVEY DATED FEBRUARY 28, 2006.
2. FACILITY IMPROVEMENTS SINCE FEBRUARY 28, 2006 ARE NOT SHOWN OR ARE APPROXIMATE.
3. PIPE LOCATIONS, DIAMETERS, AND MATERIALS SHALL BE FIELD CONFIRMED.
4. STORMWATER MANAGEMENT SYSTEM INFORMATION SHOWN FROM FEBRUARY 28, 2006 MOLLENHAUER GROUP ALTA/ACSM LAND TITLE SURVEY; SEPTEMBER 15, 1983 SOUTH YARD PAVING PLAN, 39-000; NOVEMBER 7, 1980 SITE DEVELOPMENT PLOT PLAN, PLANT SITE PAVING AND DRAINAGE, DC-104; FEBRUARY 1998 NORTH YARD PLAN, DC-104-T; FEBRUARY 1998 SOUTH YARD PLAN, 39-724-100; FEBRUARY 1998 WEST YARD PLAN, 39-724-101 AND FIELD OBSERVATIONS PROVIDED BY EXIDE.
5. STORMWATER SYSTEM FIELD CONFIRMED BY ADVANCED GEOSERVICES TO EXTENT PRACTICAL ON SEPTEMBER 18, 2012.
6. * INDICATES ELEVATION CALCULATED USING DESIGN INVERT AND FIELD TG ELEVATION AND SUMP DEPTH.

GRAPHIC SCALE

40 0 20 40 80 160

(IN FEET)
1 inch = 40 ft.

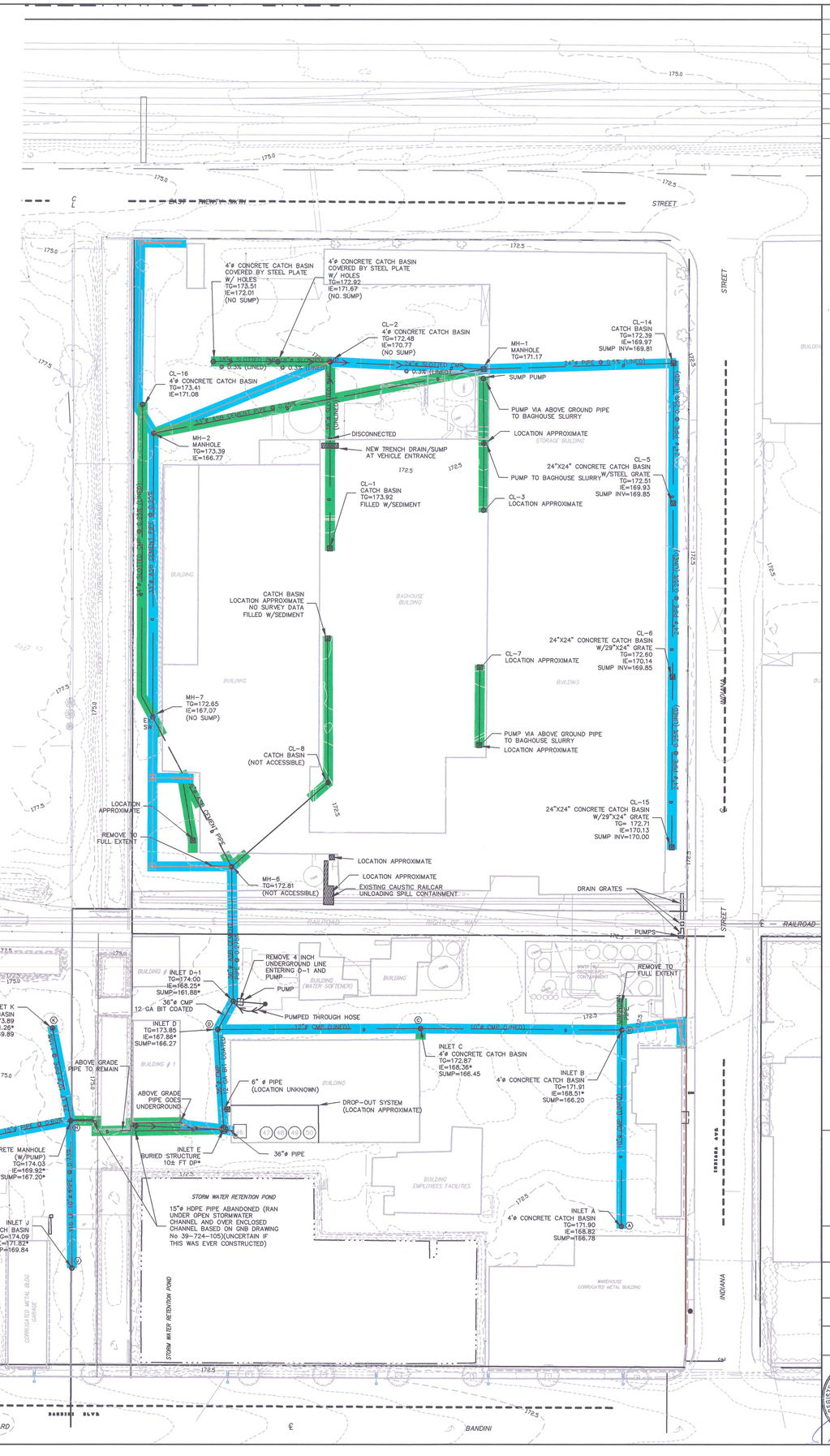

DATE:	REVISION:
6-28-13	REVISED PER DTSC COMMENTS

LEGEND:

- BLACKTOP
- BUILDING LINE
- CHAINLINK FENCE
- METAL FENCE
- CONTOURS
- RAIL ROAD
- STORM SEWER PIPE
- CATCH BASIN
- CATCH BASIN
- STORM SEWER MANHOLE W/SOLID LID
- PARTIAL BACKFILL TO NEW PIPE SUBGRADE
- BACKFILL (NO NEW PIPE)

ADVANCED GeoServices
Engineering for the Environment. Planning for People.™
1055 ANDREW DRIVE, SUITE A
WEST CHESTER, PENNSYLVANIA 19380

EXIDE TECHNOLOGIES
VERNON, CALIFORNIA

RESTORATION PLAN

REGISTERED PROFESSIONAL ENGINEER PAUL GERARD STRATMAN NO. C61595 EXP. 6/30/15 CIVIL STATE OF CALIFORNIA

Scale:	1"=40'
Originated By:	D.J.S.
Drawn By:	D.J.S.
Checked By:	J.W.D.
Project Mgr.:	P.G.S.
Project No.:	2013-2967
Sheet No.:	FIGURE 4-2
Issued:	JUL 12 2013

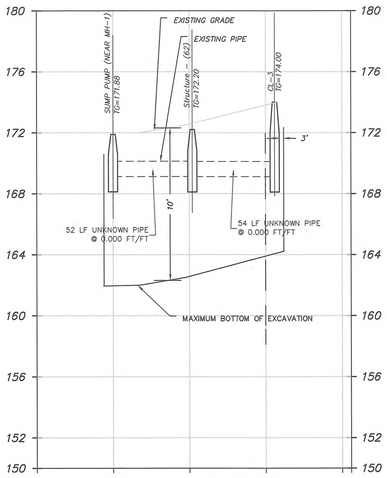

PROFILE: SUMP PUMP TO CL-3
SCALE: 1"=40' HOR
1"=4' VERT

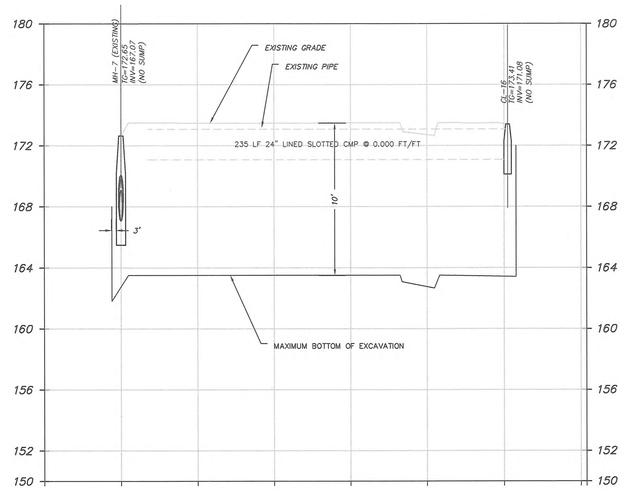

PROFILE: MH-7 TO CL-16
SCALE: 1"=40' HOR
1"=4' VERT

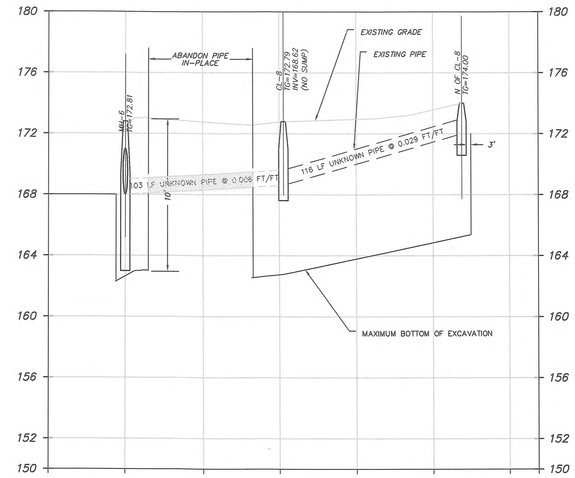

PROFILE: MH-6 TO AREA DRAIN (WEST BAGHOUSE BUILDING)
SCALE: 1"=40' HOR
1"=4' VERT

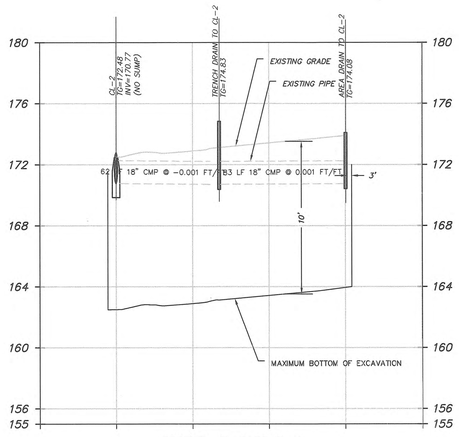

PROFILE: CL-2 TO CL-1
SCALE: 1"=40' HOR
1"=4' VERT

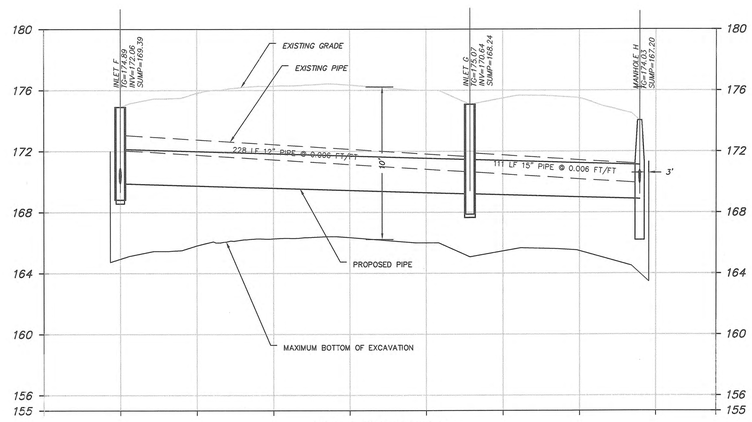

INLET F TO MANHOLE H
SCALE: 1"=40' HOR
1"=4' VERT

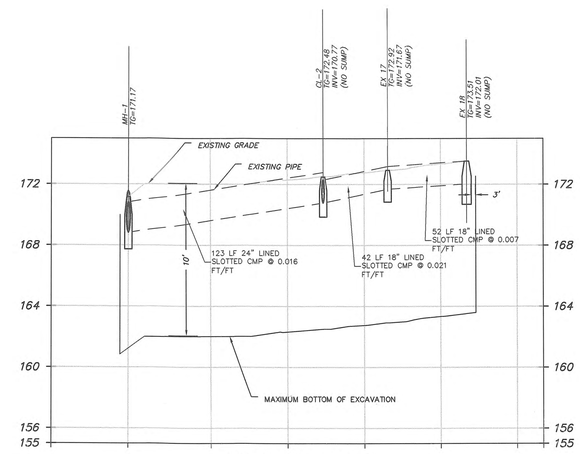

PROFILE: MH-1 TO EX 18
SCALE: 1"=40' HOR
1"=4' VERT

DATE:	REVISION:

ADVANCED GeoServices
Engineering for the Environment. Planning for People.™
1055 ANDREW DRIVE, SUITE A
WEST CHESTER, PENNSYLVANIA 19380

EXIDE TECHNOLOGIES
VERNON, CALIFORNIA

STORM DRAINAGE
EXCAVATION PLAN

EXISTING PIPE
PROFILES

REGISTERED PROFESSIONAL ENGINEER
PAUL GERARD STAPLETON
NO. C61595
EXP. 6/30/15
CIVIL
STATE OF CALIFORNIA

Scale:	NTS
Originated By:	D.J.S.
Drawn By:	D.G.H.
Checked By:	D.G.H.
Project Mgr.:	P.G.S.
Project No.:	20132967
Sheet No.:	FIGURE 4-3
Issued:	JUL 12 2013

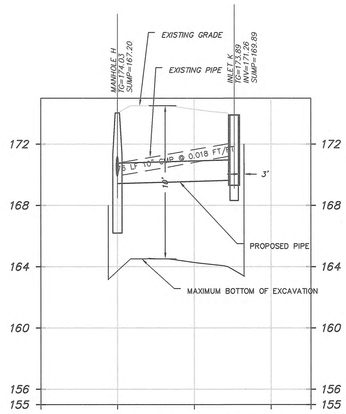

PROFILE: MANHOLE H TO INLET K
SCALE: 1"=40' HOR
1"=4' VERT

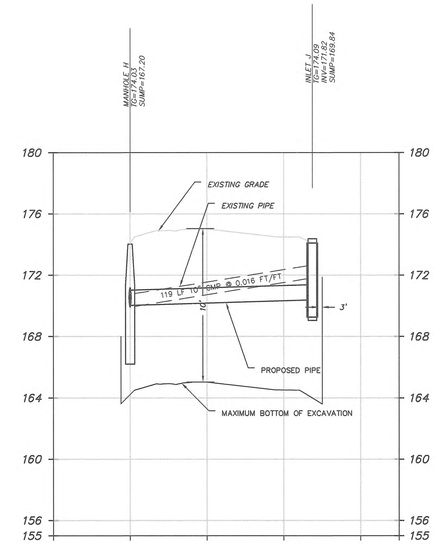

PROFILE: MANHOLE H TO IINLET J
SCALE: 1"=40' HOR
1"=4' VERT

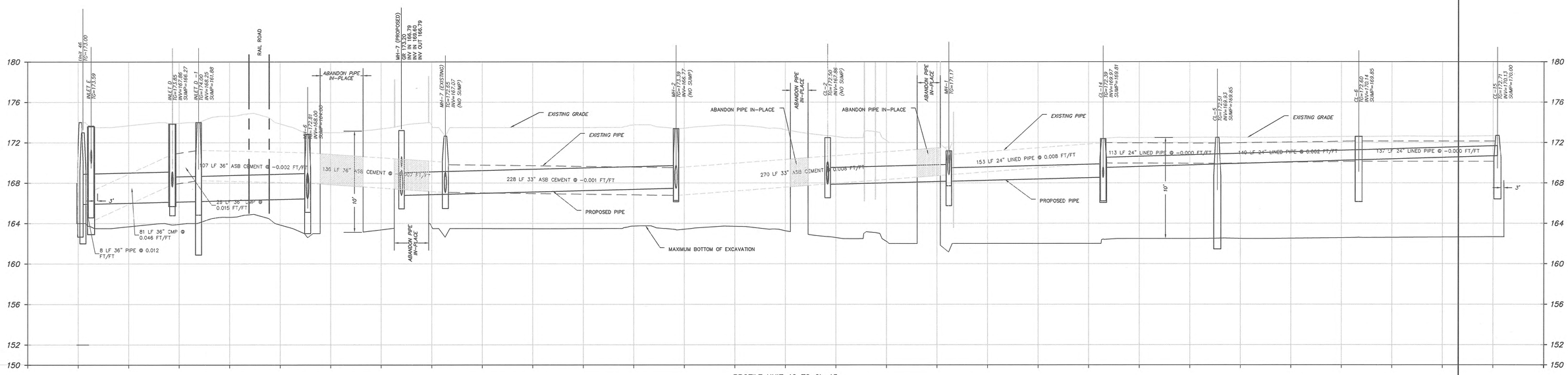

PROFILE UNIT 46 TO CL-15
SCALE: 1"=40' HOR
1"=4' VERT

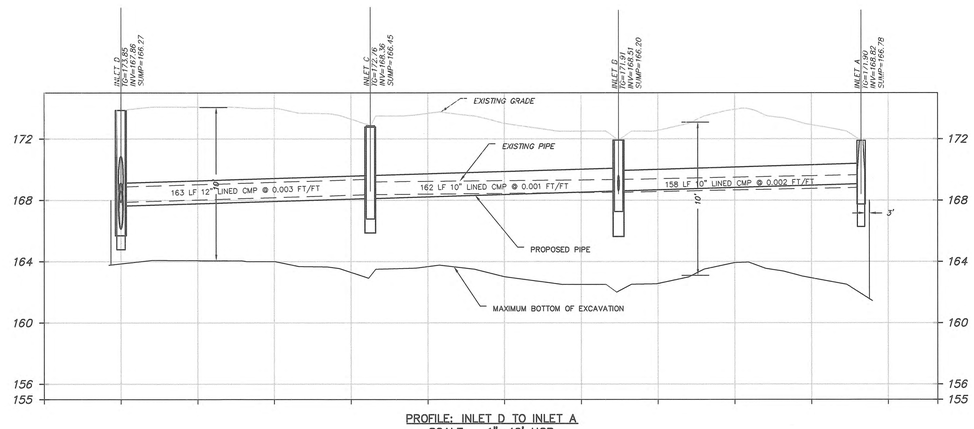

PROFILE: INLET D TO INLET A
SCALE: 1"=40' HOR
1"=4' VERT

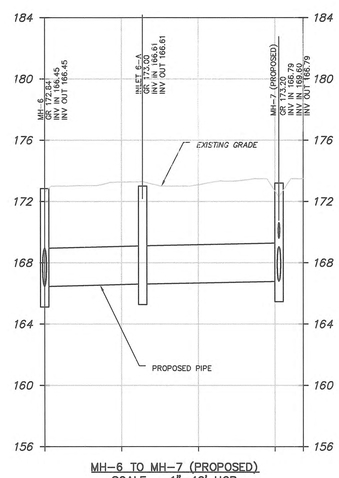

MH-6 TO MH-7 (PROPOSED)
SCALE: 1"=40' HOR

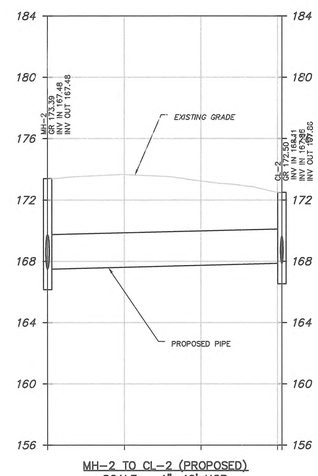

MH-2 TO CL-2 (PROPOSED)
SCALE: 1"=40' HOR

DATE:	REVISION:

ADVANCED GeoServices™
Engineering for the Environment. Planning for People.
1055 ANDREW DRIVE, SUITE A
WEST CHESTER, PENNSYLVANIA 19380

EXIDE TECHNOLOGIES
VERNON, CALIFORNIA

STORM DRAINAGE
EXCAVATION PLAN

EXISTING PIPE
PROFILES

REGISTERED PROFESSIONAL ENGINEER
PAUL GERARD STRYCHAR
NO. C61595
EXP. 6/30/15
CIVIL
STATE OF CALIFORNIA

Scale:	NTS
Originated By:	D.J.S.
Drawn By:	D.G.H.
Checked By:	D.G.H.
Project Mgr.:	P.G.S.
Project No.:	20132967
Sheet No.:	FIGURE 4-4
Issued:	JUL 12 2013

APPENDIX A

1420.1 Compliance Plan

Compliance Plan
SCAQMD Rule 1420.1

Prepared for:
Exide Technologies
Vernon, California

Prepared by:
ENVIRON International Corporation
Irvine and Los Angeles, California

Date:
January 2012

Project Number:
07-26544A

Contents

		Page
1	**Executive Summary**	**1**
1.1	Rule Required Measures	1
1.2	Compliance Plan Early Action Measures	2
1.3	Compliance Plan Contingent and Future Measures	4
2	**Introduction**	**5**
2.1	Facility Location	5
2.2	Process Description	5
2.3	Rule 1420.1 Requirements	5
2.4	Ambient Air Quality Monitoring Results	**Error! Bookmark not defined.**
3	**Rule 1420.1 Required Measures**	**7**
3.1	Total Enclosures Required by Rule 1420.1	7
3.2	Lead Point Source Emission Controls Required by Rule 1420.1	7
3.2.1	Lead Point Sources Vented to Emission Controls [Rule 1420.1(f)(1)]	8
3.2.2	Facility-Wide Emission Limits [Rule 1420.1(f)(2)]	9
3.2.3	Installation of Secondary Controls on Dryer [Rule 1420.1(f)(3)]	9
3.2.4	Installation of Secondary HEPA Controls [Rule 1420.1(f)(4)]	10
3.2.5	Installation of PTFE Filter Bags [Rule 1420.1(f)(5)]	10
3.2.6	Summary: Impact of Exide's Rule-Required Measures	10
4	**Ambient Air Quality Modeling**	**11**
5	**Additional Compliance Plan Lead Emission Reduction Measures**	**13**
5.1	Compliance Plan Early Action Measures	13
5.1.1	"Baghouse Row" Permit Application and Installation	14
5.1.2	Additional Voluntary Fugitive Source Control Compliance Plan Early Action Measures Completed by June 2011	14
5.2	Compliance Plan Contingent and Future Measures	16
5.2.1	Additional Compliance Plan Contingent Measures to Achieve the Ambient Lead Concentration	16
5.2.2	Additional Compliance Plan Contingent Measures Housekeeping, Inspection, and Maintenance [Rule 1420.1(g)(2)(A)(i)]	16
5.2.3	Additional Compliance Plan Total Enclosure Measures [Rule 1420.1(g)(2)(A)(ii)]	17
5.2.4	Modifications to Lead Control Devices [Rule 1420.1(g)(2)(A)(iii)]	17
5.2.5	Installation of Multi-Stage Lead Control Devices [Rule 1420.1(g)(2)(A)(iv)]	17
5.2.5a	Negotiated Potential Contingent and Future Measures	17
5.2.6	Process Changes, including Reduced Throughput Limits [Rule 1420.1(g)(2)(A)(v)]	17
5.2.7	Conditional Curtailments [Rule 1420.1(g)(2)(A)(vi)]	18
5.3	Implementation Schedule for All Additional Compliance Plan Lead Emission Reduction Measures (Early Action Measures and Contingent Measures)	211
6	**Conclusion**	**222**

Contents (Continued)

List of Tables

Table 1.	Total Enclosures at Exide	7
Table 2.	Currently Permitted Control Equipment at Exide	8
Table 3.	Current Facility-wide Pb Emission Rates	9
Table 5.	Source Parameters of AERMOD Runs	11
Table 6.	Lead Concentrations at the Monitors Predicted by AERMOD (µg/m^3)	11
Table 7.	Additional Early Pb Emission Reduction Measures	15
Table7a	Additional Pending Pb Emission Reduction Measures	16
Table 8.	Additional Pb Compliance Plan Contingent Measures	16

List of Figures

Figure 1.	Site Vicinity Map
Figure 2.	Site Plot Plan
Figure 3.	Nearest Residential Receptors
Figure 4a.	Charge: Reverb + Blast v. On-site N
Figure 4b.	Charge: Reverb + Blast v. Concentration MID
Figure 4c.	Charge: Reverb + Blast v. Concentration NE
Figure 4d.	Charge: Reverb + Blast v. Concentration Rehrig
Figure 4e.	Production: Reverb + Blast v. Concentration On-site N
Figure 4f.	Production: Reverb + Blast v. Concentration MID
Figure 4g.	Production: Reverb + Blast v. Concentration NE
Figure 4h.	Production: Reverb + Blast v. Concentration Rehrig
Figure 5.	Average Lead Concentration at On-Site N Monitor versus Production

List of Appendices

Appendix A.	List of Compliance Plan Measures
Appendix B.	December 1, 2011 Letter from the SCAQMD
Appendix C.	Conditions

P:\E\Exide\1420.1-Compliance Plan-2011_CompPlan\Exide 1420-1 Compliance Plan.docx

1 Executive Summary

Exide Technologies, Inc.'s (Exide) Rule 1420.1(g) Compliance Plan describes additional lead emission reduction and control measures to assure compliance with the National Ambient Air Quality Standard of 0.15 µg/m^3 on a three-month rolling average and Rule 1420.1(d)(2) averaged over 30 consecutive days after January 1, 2012, if Exide does not demonstrate compliance with those standards.

Exide submitted its initial Compliance Plan in August 2011. On December 15, 2011, Exide submitted a revised Compliance Plan in order address the South Coast Air Quality Management District's December 1, 2011 correspondence (correspondence attached hereto as Appendix B). Exide and the District thereafter engaged in further communication regarding measures to be implemented, and Exide now submits this second revised Compliance Plan at the District's request. Exide has worked in good faith with the District throughout this process.

Exide has diligently undertaken lead emission reduction measures that fall into two general categories: (a) measures required by South Coast Air Quality Management District Rule 1420.1 ("Rule-Required Measures"), and (b) Rule 1420.1(g) Compliance Plan additional lead emission reduction Measures ("Rule Compliance Plan Additional Lead Emission Reduction Measures").

The Rule Compliance Plan Additional Lead Emission Reduction Measures can be further divided into two sub-categories: (i) additional lead emission reduction measures that Exide has already proactively implemented ("Compliance Plan Early Action Measures" or "Early Action Measures"), and (ii) additional lead emission reduction measures that Exide will implement if it does not satisfy the ambient standards beginning with and after January 2012 ("Compliance Plan Contingent Measures" or "Contingent Measures").

Though many of these Rule-Required Measures and Compliance Plan Early Action Measures are complete (and have greatly reduced ambient air lead concentrations), several have only recently been implemented or are still in progress. Therefore, the full emissions-reduction impact of these measures is yet to come, and Exide is reasonably assured that it will comply with the ambient standards after January 1, 2012. Indeed, Exide is satisfying emissions standards as of the date of this January 2012 Compliance Plan submittal. If Exide does not satisfy the NAAQS standard in the future, Exide is prepared to implement the additional Compliance Plan Contingent measures to achieve compliance.

1.1 Rule Required Measures

Exide has worked diligently to implement all measures required by Rule 1420.1. These Rule-Required Measures include:

- Exide has completed construction of total enclosures of the battery breaking areas, the materials and storage and handling areas, the dryer and dryer areas, the smelting furnaces and furnace areas, the agglomerating furnace, and the refining and casting areas. [Rule 1420.1(e)]
- Exide has completed work to vent its lead point sources, such as the reverb and blast furnace and lead refining kettles, to baghouses and other air pollution emissions controls. [Rule 1420.1(f)(1)]

- Exide has succeeded in reducing total facility mass lead emissions from all lead point sources to below 0.045 pounds of lead per hour. [Rule 1420.1(f)(2)]
- Exide has installed secondary emissions controls (a HEPA after-filter) on its existing rotary kiln dryer to reduce point source lead emissions. [Rule 1420.1(f)(3)]
- Exide has installed secondary HEPA after-filters between the North and South Torit baghouses outlet and the existing fan inlet. [Rule 1420.1(f)(4)]
- Exide has installed PTFE filter bags in the MAC baghouse. [Rule 1420.1(f)(5)].

These completed Rule-Required Measures have allowed Exide to significantly reduce ambient air concentrations to levels approaching the NAAQS standard. Because certain of the Rule-Required Measures have only just been completed, the full positive impact of these measures has yet to appear in Exide's ambient monitoring results.

1.2 Compliance Plan Early Action Measures

In addition to 1420.1 Rule-Required Measures, Exide has voluntarily implemented several additional Compliance Plan Early Action Measures designed to achieve the NAAQS. Exide voluntarily undertook these Compliance Plan Early Action Measures (not all of which are complete, with the full positive impact still to come) in an abundance of caution even before it submitted the initial Compliance Plan in August 2011. Exide has diligently continued to work on these Compliance Plan Early Action Measures throughout 2011 and 2012, even as the Compliance Plan was being reviewed by the District. In other words, many of these Compliance Plan Early Action Measures have or already are being implemented proactively as "additional lead emission reduction measures" under Rule 1420.1(g).

These additional Compliance Plan Early Action Measures include:

- Exide has obtained the necessary permits and approvals to fully enclose its "Baghouse Row" (an area of nine baghouses between the furnace and feed prep building) which will be ventilated so as to provide the necessary in-draft velocity and negative pressure for the new enclosure. The design of this enclosure has been completed and the construction air permit received. Construction of the enclosure has commenced and is well underway. The enclosure, which is a major capital project designed to significantly reduce point-source emissions, was initially expected to be complete by the end of 2011. However, due to unexpected delays in material delivery (i.e. steel for the enclosure), Exide now expects to complete the enclosure by March 31, 2012. Exide's air modeling demonstrates that the Baghouse Row enclosure will succeed in achieving the NAAQS.
- Exide has already diligently and voluntarily undertaken and/or implemented the following Compliance Plan Early Action Measures as proactive "additional lead emissions reduction measures":
    1) Installed doors between the shipping and smelting building areas to enhance negative pressure in the smelting building.
    2) Installed an automated door on the Southeast end of the feed corridor connecting the reverb and blast feed rooms to reduce the amount of time that door is open.
    3) Installed a new vehicle wheel wash station in the west yard of the plant.

4) Completely resurfaced the west yard of the facility to enhance the effectiveness of pavement cleaning activities.

5) Installed MERV 15 rated cartridge filters in the North and South Torit collectors

6) Upgrading Dry Sweepers to a combination hybrid dry sweeper / wet scrubbing ride-on pavement cleaning unit for use on plant yard paved areas to enhance pavement cleaning efforts. [Completed by October 2011]. Placed an order for a second scrubber/sweeper in December 2011.

7) Install ventilated negative pressure enclosure for "Baghouse Row" [to be completed by March 2012]

8) Modifying the railcar dock at the south end of the smelting building to allow the direct receipt of industrial battery plates into the blast furnace feed room. [to be completed by March 31, 2012]

9) Replacing strip curtains with doors on north and south end of RMPS building. [completed by December 31, 2011]

10) Installing a new vehicle and equipment decontamination and wash area at the north end of Baghouse Row as part of the Baghouse Row enclosure construction. [completed by December 31, 2011]

11) Discontinued use of the mobile equipment wash area at the south end of the plant in December. Closure to be completed pending DTSC Permitted Unit closure requirements.

12) Focused housekeeping on roofs and other horizontal surfaces in Baghouse Row. [ongoing during 2011-2012] A second contractor has been added to perform this service and other cleaning services related to fugitive dust control efforts.

In addition to those measures already implemented or in progress, Exide has agreed to implement the following (either by its own suggestion or at the District's request):

13) Exide will be installing two backup diesel generators to supply sufficient electrical power to drive the exhaust fans for the two metallurgical furnace process off-gas baghouses and the two Torit collection systems in the event of a power outage. This will ensure that off-gases from the furnaces themselves continue to be drawn through fabric filtration during such outages. By continuing to drive the Torit fans suction can be maintained on the main smelting building enclosure during such upset events. Exide will submit any air permit applications necessary for installation of the diesel engines associated with these generators by May 2012. [voluntary work, to be completed by June 2012]

14) Exide will install a minimum of six (6) boot wash stations at the exits of the total containment buildings [as requested by District, to be completed by June 30, 2012]

15) Exide will designate one or more forklifts to be used exclusively inside of total containment buildings [as requested by District, to be completed by June 30, 2012]

Exide's diligent actions have already dramatically lowered ambient lead emission concentrations. By continuing its additional Compliance Plan Early Action Measures and completing the Baghouse Row enclosure, Exide reasonably expects to achieve and maintain the 0.15 µg/m^3 ambient lead standard.

1.3 Compliance Plan Contingent and Future Measures

Exide's diligent and aggressive voluntary Compliance Plan Early Action Measures are expected to reduce lead emissions to satisfy the NAAQS. Should it not achieve the NAAQS, Exide will be prepared to promptly implement additional compliance measures on a contingent basis to further reduce fugitive emissions. These measures include:

- Application of an elastomeric coating to the roof of the battery breaker building to enhance the maintainability of the roof and prevent the development of pinhole leaks over time.

Finally, pursuant to Rule 1420.1, Exide has considered other reduction options, including but not limited to whether process changes such as reduced throughput limits and conditional curtailments would assist in achieving NAAQS requirements. Exide has demonstrated that there is no relationship between throughput rates and ambient lead concentrations at its facility, such that reduced throughput (even on a conditional basis) would not be expected to further reduce emissions to achieve the NAAQS. [See Section 5.2.6, infra] Exide therefore does not believe it is appropriate to include throughput and conditional curtailments as self-implementing "additional lead emissions reductions measures" in this Compliance Plan. Nonetheless, Exide submitted a possible structure for conditional curtailments in its revised Compliance Plan (submitted December 2011), modeled to reflect the District Hearing Board's preference (stated in its 2008 order) for reasonable and proportional curtailments. Exide and the District have continued to discuss potential curtailment options in December and January, and Exide has now in good faith agreed to the curtailment structure reflected in this second revised Compliance Plan.

In summary, Exide has diligently completed Rule-Required Measures and has proactively and voluntarily undertaken other Compliance Plan Early Action Measures (some recently implemented, others not yet complete) designed to achieve the NAAQS and Rule 1420.1 (d)(2) ambient concentration limit after January 1, 2012. These actions have greatly reduced emissions (and Exide is currently in compliance with emissions standards), but their full effect is not yet known and will not be known until the end of April 2012. Exide has verified through air modeling that its completion of certain measures (especially full enclosures of all process areas) will result in ambient compliance. However, if Exide continues to exceed the ambient concentration limits in 2012, Exide is prepared to promptly implement additional Compliance Plan Contingent Measures to reduce emissions.

For ease of reference, a complete chart listing all Additional Compliance Plan Lead Emission Reduction Measures (both Early Action Measures and Contingent Measures) and their completion dates and implementation schedule can be found at Appendix A. Appendix A also includes graphics indicating the location of each activity. In addition, Appendix C sets forth the negotiated and District-approved conditions that Exide must satisfy.

2 Introduction

2.1 Facility Location

The Exide facility (SCAQMD ID # 124838) is located at 2700 South Indiana Street, Vernon, California. Exide is a secondary lead smelter that recycles lead batteries and other lead-bearing scrap materials. Figure 1 shows the facility and its vicinity. The land use in the immediate vicinity (up to 1.5 kilometers [km] radius) of the facility is industrial and the topography around the facility is primarily flat. The facility's layout showing the locations of the various buildings and the stacks are presented on Figure 2.

2.2 Process Description

Spent lead-acid batteries and other lead-bearing scrap materials are delivered to the facility by trucks, where the batteries and scraps are crushed, separated, and smelted to recover lead and propylene.

The spent lead-acid batteries and lead-bearing scrap are first broken apart and separated into the plastic, lead, and acid components. The plastic is recovered, and the acid is sent to a holding tank. The lead-containing components are transferred into one of the feed rooms, where they are then fed by conveyor to either the Reverbertory (Reverb) furnace (Device D119) or the Blast furnace (Device D128), which are each used to heat the lead until it reaches a molten state.

The lead refining kettles are used to purify the hot, molten lead that is produced during the smelting process. Each kettle sits inside a brick-lined pit, housing natural gas-fired burners. The burners heat the air between the burners and the kettle, thereby heating the kettle. The kettles are continuously heated; however, there are usually only two or three kettles that contain material at any one time. The molten lead in the kettles is repeatedly heated, agitated with a mixer, and allowed to cool, with periodic stirring and additions of refining agents.

The refined lead is then formed into ingots, which are subsequently transferred to the Finished Lead Storage Building.

2.3 Rule 1420.1 Requirements

On November 12, 2008, the United States EPA published the Final Rule in the Federal Register revising the NAAQS for lead from 1.5 $\mu g/m^3$ to 0.15 $\mu g/m^3$ measured on a three-month rolling average.

On November 5, 2010, the SCAQMD Governing Board adopted Rule 1420.1 (Emissions Standards for Lead from Large Lead-Acid Battery Recycling Facilities). Rule 1420.1(d)(2) prohibits a covered facility from discharging lead emissions exceeding 0.15 $\mu g/m^3$ averaged over any 30 consecutive days. The Rule requires covered facilities to implement certain practices and emission control measures to attain the Lead NAAQS standard with the 30-day period starting January 1, 2012.

Pursuant to Rule 1420.1(g), starting on July 1, 2011, if the facility discharges lead emissions that exceed 0.12 $\mu g/m^3$ averaged over any 30 consecutive days, the facility shall submit a

Compliance Plan that contains a description of additional lead emission reduction measures to achieve the ambient lead concentration of 0.15 $\mu g/m^3$ averaged over any 30 consecutive days.

3 Rule 1420.1 Required Measures

Rule 1420.1 establishes several requirements intended to ensure compliance with the revised Lead ambient air quality standard of 0.15 µg/m^3. Rule 1420.1(e) specifies the requirements for Total Enclosures. Rule 1420.1(f) specifies the requirements for Lead Point Source Emission Controls.

Exide has complied with the mandatory provisions of Rule 1420.1, as set forth below. This work has significantly reduced both fugitive and point source lead emissions to levels approaching the NAAQS.

3.1 Total Enclosures Required by Rule 1420.1

Rule 1420.1(e) requires that the following areas be enclosed within a total enclosure as defined by Rule 1420.1(c)(25):

(A) Battery breaking areas;

(B) Materials storage and handling areas, excluding areas where unbroken lead-acid batteries and finished lead products are stored;

(C) Dryer and dryer areas including transition pieces, charging hoppers, chutes, and skip hoists conveying any lead-containing material;

(D) Smelting furnaces and smelting furnace areas charging any lead-containing material;

(E) Agglomerating furnaces and agglomerating furnace areas charging any lead-containing material; and

(F) Refining and casting areas.

As of July 1, 2011 Exide has enclosed all required areas. Table 1 summarizes this work.

Table 1. Total Enclosures at Exide

Control Device Description	Equipment/Area Controlled
Total enclosure around RMPS area	Fugitive emissions in RMPS area
Total enclosure around dryer	Fugitive emissions from rotary dryer furnace (D115)
Total enclosure around smelting and refining processes	Fugitive emissions from smelting and refining processes
Total enclosure around South Corridor between Smelting and Refining building and Reverb Furnace Feed Room	Fugitive emissions in South Corridor
Partial enclosure/tunnel for truck washing station	Minimize lead-contaminated water from spraying outside truck washing station

3.2 Lead Point Source Emission Controls Required by Rule 1420.1

Rule 1420.1(f) requires that each lead control device meet certain requirements. Exide's compliance with these Rule requirements is summarized below.

3.2.1 Lead Point Sources Vented to Emission Controls [Rule 1420.1(f)(1)]

Exide currently employs multiple types of air pollution control (APC) equipment and other emission reduction measures in order to reduce the amount of process lead emissions. A list of the currently permitted, installed and fully operational control equipment (as of the date of this plan) is provided in Table 2.

Table 2. Currently Permitted Control Equipment at Exide

Control Device Description	Equipment/Area Controlled
Baghouses/Dust Collectors/Scrubbers	
C40 – baghouse; C41 – baghouse;	Reverb furnace (D119)
C44 – afterburner; C45 – baghouse	Blast furnace (D128)
C42 – venturi scrubber; C43 – tray scrubber; S139 – stack	APC 1 (C40, C41), APC 2 (C44, C45)
Hard Lead baghouse	Lead refining kettles and dross hoppers (D7 – D20), Blast furnace tapping ports and launders (D129 – D134), rotary dryer furnace enclosure (C177)
Soft Lead baghouse	Lead refining kettles and dross hoppers (D24 – D37), Reverb furnace feeders (D117, D118), Reverb furnace tapping ports and launders (D120 – D125), fugitive emissions from Quench Chamber cleanout door (D149)
Material Handling baghouse	Central Vacuum System A (C159, C160), Central Vacuum System B (C162, C163), Blast Furnace feed hopper (D126)
C165 – packed bed scrubber; C172 – HEPA filter; S166 – stack	Raw Material Preparation System (RMPS) building (C175), Hammermill (D1), Hammermill feed conveyor (D2), Mud holding tanks (D3 – D5)
North Torit baghouse	Fugitive emissions from the Smelting and Refining building, fugitive emissions from the pending Baghouse Row building
South Torit baghouse	Fugitive emissions from the Smelting and Refining building, fugitive emissions from the pending Baghouse Row building
C143 – cyclone; C144 – baghouse; S145 – stack	Rotary dryer furnace (D115) and screw conveyors (D114, D116)
C156, C157 – MAC baghouses; S158 - stack	RMPS building (C175), lead refining kettle burner stack emissions, rotary dryer hoppers (D109, D110) and conveyors (D111 – D113), South Corridor building (C182)
C159 – cyclone; C160 – baghouse	Fugitive emissions in Blast Furnace Feed Room
C162 – cyclone; C163 – baghouse	Fugitive emissions in Blast Furnace Feed Room

3.2.2 Facility-Wide Emission Limits [Rule 1420.1(f)(2)]

1420.1(f)(2) requires that the total facility mass lead emissions from all point sources shall not exceed 0.045 pounds of lead per hour, a level determined from District dispersion modeling at the time of promulgation of Rule 1420.1 as sufficient to maintain ambient concentration impacts from stack sources below one half the ambient limit. Exide has taken diligent actions to achieve (and even go substantially below) these limits.

As shown in Table 3, the facility-wide Pb emissions from all point sources at Exide are currently below the 0.045 lbs/hr limit.

Rule 1420.1(f)(2) also requires that no single source have lead emissions in excess of 0.01 lbs/hr. As shown in Table 3, all individual sources have a lead emission rate that is less than 0.01 lbs/hr and is in compliance with this section of the Rule.

Table 3. Current Facility-wide Pb Emission Rates

AQMD Device ID	Control Device Description	Area Served	Source Test Date	Source Test Measured (dscfm)	Pb Emissions (lbs/hr)
C38	North Torit	General Ventilation	9/2011	90,694	0.00374
C39	South Torit	General Ventilation	8/23/2011	97,118	0.00321
C156/C157	MAC BHs	GV: RMPS, Kettle Burners, Reverb Feed	8/1-9/1/2011	90,727	0.00339
C48	Material Handling BH	GV: Material Handling & Blast Feed Room	10/12/2010	95,858	0.00115
C165/C172	RMPS MAPCO Demister / HEPA	RMPS	11/10-12/2010	17,270	0.000358
C144/C143	Kiln Dryer BH / Cyclone	Kiln (Rotary Dryer)	9/2011	9,723	0.00202
C42/C43	Neptune-Venturi Scrubber	Blast & Reverb furnaces	9/8/2010	18,059	0.000175
C46	Hard Lead BH	Hard Lead	10/4,5,7/2010	101,832	0.00102
C47	Soft Lead BH	Soft Lead	10/2010	85,435	0.000851
Total				**606,716**	**0.016**
					<0.045 limit

3.2.3 Installation of Secondary Controls on Dryer [Rule 1420.1(f)(3)]

On 12/3/2010 Exide submitted a permit application (A/N 516866) to install a HEPA after-filter between the existing rotary kiln dryer baghouse (C144) outlet and the existing fan inlet. Exide completed the HEPA installation by June 30, 2011. Exide therefore reasonably expects that this unit will comply with the requirements of Rule 1420.1(d)(3)(A) and will further reduce the point source lead emissions from the facility in 2011-2012.

3.2.4 Installation of Secondary HEPA Controls [Rule 1420.1(f)(4)]

On 5/13/2011 Exide submitted a permit application (A/N 520575 & A/N 50577) to install a HEPA after-filter between the existing North and South Torit baghouses (C38 &C39) outlet and the existing fan inlet. Exide completed the duct work and HEPA installation on August 9, 2011. Exide completed a source test on this unit by the end of the month. As with the secondary controls on the dryer (Section 3.2.3 above), Exide reasonably expects that this recent addition will further reduce lead emissions in 2011-2012.

3.2.5 Installation of PTFE Filter Bags [Rule 1420.1(f)(5)]

Exide submitted Permit applications (A/N's 520478 & 520501) on 3/31/2011 to install upgraded polytetrafluoroethylene membrane-type (PTFE) filter bags on the MAC baghouses. Exide completed the upgrade and the baghouse leak tested in June 2011. Exide completed a source test on this unit in September 2011.

3.2.6 Summary: Impact of Exide's Rule-Required Measures

Exide's efforts to comply with the mandatory provisions of Rule 1420.1 have resulted in significant reductions of both fugitive and point source lead emissions, with stack emissions, for example, being reduced by approximately one half on a facility-wide basis since the promulgation of the Rule. Because Exide only recently completed several of the required measures, their full positive impact has yet to be fully realized. Thus, Exide expects to show even further emissions reductions and further improvement to ambient levels by the end of 2011 and early 2012 and is expected to demonstrate and maintain compliance once the Baghouse Enclosure is complete.

Exide's actions have significantly reduced ambient lead concentrations (see Table 4), and these reductions are expected to continue into the future. Exide reasonably expects that full compliance will be achieved once the Baghouse Row enclosure is complete.

Table 4. Ambient Air Monitoring Results (30-day Average)

Month	Rail	SE	SW	NE	OSN	MID
July 2011	0.06	0.06	0.08	0.68	0.55	0.21
August 2011	0.07	0.06	0.09	0.70	0.47	0.18
September 2011	0.03	0.06	0.08	0.23	0.25	0.14
October 2011	0.04	0.06	0.18	0.22	0.17	0.14
November 2011	0.03	0.08	0.16	0.18	0.19	0.26
December 2012	0.03	0.05	0.09	0.08	0.11	0.12
January 1-17, 2012	0.03	0.05	0.09	0.07	0.10	0.11

4 Ambient Air Quality Modeling

US EPA's AERMOD dispersion model was used to evaluate the impacts that the Pb reduction Rule-Required Measures and those Early Action Measures currently under construction would have on the ambient Pb concentrations measured at the monitors located at and around the fenceline of the Vernon facility. Inputs to AERMOD included:

- Pb emission rates (lbs/hr) from Point Sources using the rates measured from source tests conducted in late 2010 and early 2011 at the facility;
- Stack heights for the North Torit, South Torit, and MAC Baghouse were increased from 79 feet to 120 feet for and the building parameters reflect the presence of the new Baghouse Row enclosure; and
- Roadway fugitive emissions from the 2007 ATIR were included in this dispersion modeling. Emissions from all other fugitive sources were set to zero to reflect the effect of the pending construction of the "Baghouse Row" enclosure is completed.

Table 5. Source Parameters of AERMOD Runs

Source ID	UTM Coordinates (m)		Emission Rate (g/s)	Release Height (m)	Temp (K)	Velocity (m/s)	Stack Diameter (m)
	X	Y					
MAPCO	389705.7	3763538	8.05E-05	19.35	299.48	4.55	1.09
MAT_STOR	389722.7	3763488	1.18E-03	34.14	300.93	14.14	2.13
SOFTLEAD	389750.0	3763554	8.38E-04	34.14	318.15	14.10	2.03
HARDLEAD	389729.9	3763505	8.35E-04	34.14	311.76	17.17	2.03
DRYER_BH	389769.8	3763525	1.32E-03	36.60	375.22	7.47	0.91
NEPTUNE	389751.4	3763527	2.20E-05	34.14	332.89	8.27	1.16
NOR_CART	389790.5	3763550	3.60E-04	36.60	298.50	11.29	2.13
SOU_CART	389789.3	3763547	5.29E-04	36.60	298.89	15.29	2.13
MAC_BH	389740.1	3763479	2.36E-04	36.60	307.44	18.06	1.82
			0.0054	**g/s**			
			0.043	**lbs/hr**			

The modeling results are summarized in Table 6 below.

Table 6. Lead Concentrations at the Monitors Predicted by AERMOD (µg/m^3)

SW_Monitor	SE_Monitor	NE_Monitor	On-Site N	REHRIG	Railway	CP_Monitor
0.00765	0.00338	0.0437	0.02403	0.04657	0.01339	0.0071

For these modeling runs, the emission rates were based on source tests from late 2010 through early 2011. Additional source testing has been in progress as part of the update for the AB2588 HRA. The emission rates that were used in this modeling did not reflect the improvements due to the recent modifications to the air pollution control equipment. The total facility-wide emission rate for all stationary sources used in the modeling was 0.043 lbs/hr. This is greater than the 0.016 lbs/hr facility-wide rate when the most recent source tests are taken into account, but it is still less than the 0.045 lbs/hr limit set by the rule – indicating that the 0.045 lbs/hr facility-wide point source limit established in the Rule is adequate to insure compliance with the ambient standards.

Thus, the modeling results presented in this Plan reflect a worst case scenario when the Vernon plant is emitting lead at a rate just below the Rule limit. As the actual facility-wide emission rate is even less than the modeled rate, the ambient impacts would be less than what is reported here. Figure 3 shows the location of the nearest residential receptors, with the nearest receptor over 0.5 miles from the Vernon fenceline.

The modeling results show that once all enclosures have been constructed and fugitive emissions become insignificant; the ambient Pb concentrations at the monitors will be well below the limit of 0.15 $\mu g/m^3$ established by the Rule. In particular, the above results show that stack emission impacts are well below the 0.15 $\mu g/m^3$ target concentration. Should the measures already planned and underway for completion by the end of 2011 fail to achieve the 0.15 $\mu g/m^3$ lead concentration at the monitors on a 30-day average after January 1, 2012, this modeling makes it clear that the issue is not with impacts from stack emissions, but rather fugitive emissions. Any contingent measures (including curtailments) implemented in response to exceedances after January 1, 2012 should, therefore, be directed to fugitive sources.

5 Additional Compliance Plan Lead Emission Reduction Measures

Rule 1420.1(g)(2) requires that the Compliance Plan include the following elements:

(A) A description of additional lead emission reduction measures to achieve the ambient lead concentration including, but not limited to, requirements for the following:

- (i) Housekeeping, inspection, and maintenance activities;
- (ii) Additional total enclosures;
- (iii) Modifications to lead control devices;
- (iv) Installation of multi-stage lead control devices;
- (v) Process changes including reduced throughput limits; and
- (vi) Conditional curtailments including, at a minimum, information specifying the curtailed processes, process amounts, and length of curtailment.

(B) The locations within the facility and method(s) of implementation for each lead reduction measure of subparagraph (g)(2)(A); and

(C) An implementation schedule for each lead emission reduction measure of subparagraph (g)(2)(A) to be implemented if lead emissions discharged from the facility contribute to ambient air concentrations of lead that exceed 0.15 µg/m^3 averaged over any 30 consecutive days measured at any monitor pursuant to subdivision (j) or at any District-installed monitor. The schedule shall also include a list of the lead reduction measures of subparagraph (g)(2)(A) that can be implemented immediately prior to plan approval.

As previously explained Exide has undertaken various Compliance Plan Early Action Measures (Section 5.1, *et. seq.*) and also proposes Compliance Plan Contingent Measures (Section 5.2, *et. seq*.) to be implemented if Exide has not satisfied the NAAQS beginning in January 2012. A complete list of all Exide's Compliance Plan Lead Emission Reduction Measures is set forth at Appendix A.

5.1 Compliance Plan Early Action Measures

In addition to the control measures required by Rule 1420.1, Exide has proactively undertaken certain additional Compliance Plan Measures that will reduce fugitive lead emissions, which are the primary source of measured concentrations. Exide diligently undertook these measures in an abundance of caution before it formally submitted this Compliance Plan. Exide's Early Action Measures are, in effect, pre-qualified and self-implemented "additional lead emission reduction measures" under Rule 1420.1(g).

Exide has not completed all of these measures, and implementation of others began recently. Exide has therefore not yet realized the full emissions-reducing impact of these voluntary measures. Thus, the exceedance of the 0.12 µg/m^3 level triggering this Compliance Plan does not reflect the expected lower lead concentrations to be achieved in 2012. Exide reasonably expects that continued implementation of these Compliance Plan Early Action Measures will

result in compliance with the ambient standards upon completion of the baghouse enclosure, making implementation of any additional Compliance Plan Contingent Measures unnecessary.

5.1.1 "Baghouse Row" Permit Application and Installation

On March 31, 2011, Exide submitted several permit applications (A/Ns 520468, 520577, 520575, 520501, 520478, 520477, & 522622) to enclose the area at the facility known as "Baghouse Row". Exide operates 9 baghouses in this area, which is between the smelting furnace building and feed prep building. Construction permits have been issued as a result of these applications, design completed, and construction of the enclosure has commenced. The enclosure was previously scheduled to be completed before the end of 2011.

Due to unanticipated material supply delays outside Exide's control, the Baghouse enclosure will not be complete until March 31, 2012. Exide will work diligently to ensure completion by this date or sooner if possible.

Exide has established an additional budget of $250K to fund 30 hours/week of additional OT for the next 15 weeks (from December 10, 2011 through March 31, 2012) to accelerate the completion of the Baghouse Row Enclosure and mitigate any risk from weather delays.

The nine baghouses are represented in Exide's Title V permit as devices C40 and C41 (Reverb Furnace baghouses), C45 (Blast Furnace baghouse), C46 (Hard Lead baghouse), C47 (Soft Lead baghouse), C48 (Material Handling baghouse), C144 (Rotary Dryer baghouse), and C156 and C157 (MAC baghouses). These baghouses control emissions from various parts of Exide's processes, such as the raw material handling, refining, and smelting processes.

The area where the baghouses are located is currently open to the atmosphere. Exide is planning on building an enclosure around the baghouses in order to reduce fugitive lead emissions. The air inside the enclosure will be vented to existing air pollution control devices which consists of Torit cartridge collectors C38 and C39, respectively. The existing ventilation capacity is expected to be adequate to provide the necessary in-draft velocity and negative pressure for the new enclosure.

The height of the new enclosure will be 79 feet. In order to conform to current building codes, the height of the stacks for C144 (Rotary Dryer), C156 and C157 (MAC Baghouses), C38 (North Torit), and C39 (South Torit) must be increased to 120 feet, which will minimize the effects of building downwash while still meeting stack height rule limits. Exide will also install a differential pressure monitoring system on the new enclosure in compliance with Rule 1420.1. Overall, the voluntary modification to enclose "Baghouse Row" is expected to significantly reduce emissions. Indeed, Section 4 outlined Exide's ambient air modeling, demonstrating that ambient lead concentrations at all monitors will be less than 0.15 $\mu g/m^3$ once all enclosures are fully-operational.

5.1.2 Additional Voluntary Fugitive Source Control Compliance Plan Early Action Measures Completed by June 2011

Exide undertook additional Compliance Plan Early Action Measures to reduce fugitive emissions from other locations at the Vernon plant, as summarized in Table 7 below. These measures were underway by July 2011 and will all be completed prior to January 1, 2012 (with the

exception of the Baghouse Row enclosure and related actions). As previously stated, these are "additional lead emissions reductions measures" under Rule 1420.1(g) that Exide has proactively and voluntarily initiated on an early action basis before submitting this formal Compliance Plan.

Table 7. Additional Early Pb Emission Reduction Measures

	Action	Completion Date
1	Install door(s) between shipping and smelting to enhances negative pressure in refining/smelting and reduce draft from shipping.	Oct 2010
2	Install an automated door on the southeast end of the corridor to reduce the amount of time that the door is open	Nov 2010
3	Install a new vehicle wheel wash station in the west yard of the plant	Jun 2011
4	Completely resurface the west yard of the facility to enhance the effectiveness of pavement cleaning activities	Jul 2011
5	Installed MERV 15 rated cartridge filters in the North and South Torit collectors	July 2011
6	Upgraded ride-on yard sweeper to a combination dry sweeper / wet scrubbing unit for cleaning of plant yard pavement. Added additional sweeper/scrubber.	Oct-Dec. 2011
7	Install ventilated negative pressure enclosure for "Baghouse Row"	March/April, 2012
8	Modify railcar dock at the south end of the smelting building to allow receiving of industrial plates and dedicated inside and outside forklifts.	Dec 2011
9	Replace strip curtains with doors at north and south end of RMPS building	Dec 2011
10	Install new vehicle and equipment decontamination and wash area at the north end of baghouse row as part of the baghouse row enclosure construction	Dec 2011
11	Discontinued use of mobile equipment wash area at south of plant. Final closure pending DTSC approval.	pending DTSC approval
12	Focused housekeeping and other horizontal surfaces in Baghouse Row, pending completion of enclosure of area. Secured services of second contractor	Nov 2010-Dec 2011

Certain of the measures were only recently implemented, and their positive effect on emissions is expected to increase as Exide continues to improve its procedures (*i.e.* improved housekeeping on roofs and horizontal surfaces). With these voluntary fugitive reduction Compliance Plan Early Action Measures, along with the required Rule-Required Measures and the pending "Baghouse Row" enclosure, Exide has seen emission reductions during the second half of 2011 and expects further reductions upon completion of these pending measures.

In addition to the items listed in Table 7, Exide has agreed to implement the following items in the near future, either of its own volition or as part of discussions with the District that took place after Exide submitted its revised Compliance Plan on December 15, 2011:

Table 7a Additional Pending Pb Emission Reduction Measures

Action	Completion Date
13. [Voluntary Measure] Exide will be installing two backup diesel generators to supply sufficient electrical power to drive the exhaust fans for the two metallurgical furnace process offgas baghouses and the two Torit collection systems in the event of a power outage. This will ensure that off-gases from the furnaces themselves continue to be drawn through fabric filtration during such outages and by continuing to drive the Torit fans suction can be maintained on the main smelting building enclosure during such upset events. Exide will submit the air permit applications necessary for the installation of the diesel engines associated with these generators by May 2012 and expects to complete installation of these systems by June 2012.	Jun 2012
14. [District-Required Measure] Exide will install a minimum of six (6) boot wash stations at the exits of the total containment buildings.	Jun 2012
15. [District-Required Measure] Exide will designate one or more forklifts to be used exclusively inside of total containment buildings. This Measure relates to and expands upon Measure No. 8 in Table 7.	Jun 2012

5.2 Compliance Plan Contingent and Future Measures

Exide reasonably believes that various measures already completed or underway will allow it to achieve the NAAQS and Rule 1420.1(d)(2) ambient limit. However, if Exide continues to exceed these standards after January 2012, it will undertake further additional “lead reduction measures” (Compliance Plan Contingent Measures) as set forth in this Section.

5.2.1 Additional Compliance Plan Contingent Measures to Achieve the Ambient Lead Concentration

Additional lead emission reduction Compliance Plan Contingent Measures evaluated and proposed to achieve the ambient lead concentration as required by Rule 1420.1(g)(2)(A) are described below.

5.2.2 Additional Compliance Plan Contingent Measures Housekeeping, Inspection, and Maintenance [Rule 1420.1(g)(2)(A)(i)]

In addition to continuing and increasing those already-implemented measures set forth in Table 7, if Exide has not satisfied the ambient standards it will perform the additional maintenance activities actions summarized in Table 8 below.

Table 8. Additional Pb Compliance Plan Contingent Measures

	Action	Completion Date	Emission Source
1	Apply elastomeric coating to the roof and sidewalls of the battery breaker building to enhance maintainability of the roof and prevent development of pinhole leaks over time.	June 2012	Fugitive

5.2.3 Additional Compliance Plan Total Enclosure Measures [Rule 1420.1(g)(2)(A)(ii)]

Once Exide installs the total enclosure for "Baghouse Row" as described in Section 5.1.1, all lead point sources at the Vernon plant will be operating inside total enclosures that will be vented to existing lead control devices.

In addition, a significant portion of the plant property will also be contained within total enclosures. Any fugitive dust generated on these operating areas will be contained and vented to existing lead control devices.

As a result, Exide does not envision that any additional total enclosures (beyond that already described for the enclosure of "Baghouse Row") will be available to be enclosed that would reduce Pb emissions.

5.2.4 Modifications to Lead Control Devices [Rule 1420.1(g)(2)(A)(iii)]

5.2.5 Installation of Multi-Stage Lead Control Devices [Rule 1420.1(g)(2)(A)(iv)]

The secondary HEPA filters were not yet installed on the North and South Torits by July 1, 2011 so their emission reduction benefits were not being fully felt at the ambient monitors when the original Compliance Plan was submitted. The installation was completed by the end of July with subsequent source tests being performed approximately one month later.

Section 4 outlined the ambient modeling Exide performed demonstrating that ambient Pb concentrations at all monitors will be less than 0.15 $\mu g/m^3$ once all enclosures are fully operational. As a result, installation of additional multi-stage lead control devices will not be needed to meet the ambient Pb concentration.

5.2.5a Negotiated Potential Contingent and Future Measures

Though Exide maintains that such measures may not be necessary or appropriate (as set forth in sections 5.2.3 – 5.2.5), after discussion with the District, Exide has nonetheless agreed to certain potential contingent measures that may be implemented in the event of a future exceedance. These potential contingent future measures are governed by Conditions 8-11 in Appendix C.

5.2.6 Process Changes, including Reduced Throughput Limits [Rule 1420.1(g)(2)(A)(v)]

Upon careful consideration, Exide has not identified any issues with its basic processes or lead processing equipment and technologies that are hindering achieving the ambient standard. Fundamental process changes are not, therefore, proposed as Contingent Measures. However, as highlighted elsewhere in this Plan, Exide has proposed additional enclosures of those processes and equipment which Exide has modeled to be effective in achieving the NAAQS. With these enclosures (as well as Exide's other required and voluntary actions under 1420.1), Exide does not expect throughput limits to be necessary.

In order to assess whether process changes or throughput reductions may be necessary or effective, Exide plotted the daily ambient air measurements since 2010 from the specified monitors against the corresponding throughput rates for that day (Figure 4). For this exercise,

throughput is taken as the sum of the reverberatory furnace and blast furnace charging rates. Figure 5 is a bar chart that shows the average daily ambient air measurement for different ranges of daily production rates (tons/day).

All graphs clearly show that, for the plant configurations that existed during the time period represented by these charts, there is no correlation between throughput rate and the measurements taken from the various ambient monitors. At relatively low production rates (< 200 tons/day), the average reading from the indicated monitors is essentially the same as the readings at higher production rates (> 200 tons/day).

As Exide has demonstrated in the past, baghouses and other mechanical filtration devices are constant outlet concentration devices, not constant control efficiency devices. Their emission rates are determined by the concentration of contaminants bleeding through the filtration media which, once the filter media is "loaded" on the inlet side, remains relatively constant and independent of variations of inlet concentrations to the collector. Thus, emissions from such collectors also do not vary with the underlying process rates giving rise to those inlet concentration loadings. Therefore, if the ventilation fan serving a given baghouse is on, emissions are relatively constant and independent of process rates.

Given the demonstrated lack of any relationship between throughput rates and ambient monitor results at this facility, and the underlying principles of operation of the lead emission control devices at this facility, we believe that reduced throughput limits will not reduce lead concentrations at ambient monitors and are not an appropriate element for inclusion as a Compliance Plan measure.

Nonetheless, in its December 2011 revised Compliance Plan Exide suggested an approach that would have reduced throughput limits on a conditional basis. Exide has since negotiated certain conditional curtailments with the District, which are set forth in Section 5.2.7.

5.2.7 Conditional Curtailments [Rule 1420.1(g)(2)(A)(vi)]

As stated in Section 3.1 and elsewhere in this Plan, once Exide completes the installation of the total enclosures, emissions from fugitive sources are not expected to be a major contributor to lead concentrations.

Installation of upgrades at the point sources will ensure compliance with the emission limit established by Rule 1420.1(f)(2). As was stated in Section 3.2.2, the facility-wide Pb emission rate from all point sources from the most recent source tests is much less than the 0.045 lbs/hr limit established by the rule.

Reductions in process throughput will not reduce the lead concentration measured at ambient monitors as was described in section 5.2.6.

Reduction in emissions will be accomplished through the significant reduction in fugitive emissions, the installation of total enclosures and upgrades to the point sources. For the same reasons that "reduced throughput limits" are not an appropriate measure for reducing ambient impacts from this facility, neither are "conditional curtailments" involving processing or

production rates or activities Exide has demonstrated repeatedly using actual data from this facility that ambient monitor concentrations have no relationship to process throughput rates.

As stated above in Section 4, dispersion modeling indicates that stack emissions would not be the cause should 30-day ambient concentrations exceed 0.15 µg/m^3 after completion of the Baghouse Row enclosure. Accordingly, should any activities at the site be conditionally curtailed in response to such an occurrence, the curtailed activities should only be those associated with the potential generation of fugitive emissions rather than process activities that are enclosed and ventilated to point sources.

However, Exide recognizes that the District has requested additional process/throughput curtailment options. Therefore, in order to address the issues raised in the District's December 1, 2011 correspondence, and in the spirit of good faith cooperation with the District, Exide proposed a structure for conditional curtailments in its December 2011 revised Compliance Plan, to be implemented in the event that ambient concentrations exceed the 0.15 µg/m^3 standard measured over 30 consecutive days. Exide continues to maintain that, if implemented, a curtailment structure must be reasonable and proportional, must conform to the Hearing Board's 2008 Order (3151-18) and other Hearing Board precedent, and must allow Exide a reasonable due process opportunity to identify and correct episodic causes for potential ambient exceedances without submitting to curtailment.

After its December 2011 submittal, Exide and the District continued to engage in discussions regarding conditional curtailments. In the spirit of good faith, Exide has agreed to implement the following (set forth in Appendix C):

1. On and after January 1, 2012, beginning with the 30-day period of January 1, 2012 through January 30, 2012, if monitored ambient lead concentrations exceed 0.15 µg/m^3, but no more than 0.23 µg/m^3, on a rolling 30 day average at any AQMD or AQMD-approved ambient monitor, Exide shall implement the following mandatory daily process curtailments:

    A. Reduce the amount charged to the reverberatory furnace by 15% of the daily average charged over the prior 90 days;

    B. The mandatory curtailments contained within this condition shall begin within 48 hours of the time when Exide receives the sampling results (and in the case of an AQMD monitor, the quality assurance and O&M data for the monitor). Exide shall calculate the above-referenced averages based on the total materials charged in the relevant time period above divided by the number of days when there were materials charged and shall provide supporting documentation to the District to justify the calculated averages prior to the required time of implementation. These mandatory curtailments shall remain in effect until the monitoring results at the affected monitoring station reflect 15 consecutive 30-calendar day averages of less than 0.15 µg/m^3.

2. On and after January 1, 2012, beginning with the 30-day period of January 1, 2012 through January 30, 2012, if monitored ambient lead concentrations exceed 0.23 µg/m^3, but no more than 0.30 µg/m^3, on a rolling 30 day average at any AQMD or AQMD-approved ambient monitor, Exide shall implement the following mandatory daily process curtailments:

   A. Reduce the amount charged to the reverberatory furnace by 25% of the daily average charged over the prior 90 days;

   B. The mandatory curtailments contained within this condition shall begin within 48 hours of the time when Exide receives the sampling results (and in the case of an AQMD monitor, the quality assurance and O&M data for the monitor). Exide shall calculate the above-referenced averages based on the total materials charged in the relevant time period above divided by the number of days when there were materials charged and shall provide supporting documentation to the District to justify the calculated averages prior to the required time of implementation. These mandatory curtailments shall remain in effect until the monitoring results at the affected monitoring station reflect 15 consecutive 30-calendar day averages of less than 0.15 µg/m^3.

3. On and after January 1, 2012, beginning with the 30-day period of January 1, 2012 through January 30, 2012, if monitored ambient lead concentrations exceed 0.30 µg/m^3 on a rolling 30 day average at any AQMD or AQMD-approved ambient monitor, Exide shall implement the following mandatory daily process curtailments:

   A. Reduce the amount charged to the reverberatory furnace by 50% of the daily average charged over the prior 90 days;

   B. The mandatory curtailments contained within this condition shall begin within 48 hours of the time when Exide receives the sampling results (and in the case of an AQMD monitor, the quality assurance and O&M data for the monitor). Exide shall calculate the above-referenced averages based on the total materials charged in the relevant time period above divided by the number of days when there were materials charged and shall provide supporting documentation to the District to justify the calculated averages prior to the required time of implementation. These mandatory curtailments shall remain in effect until the monitoring results at the affected monitoring station reflect 30 consecutive 30-calendar day averages of less than 0.15 µg/m^3 or the monitoring results at the affected monitoring station reflect ten consecutive days below 0.12 µg/m^3 and no other monitor causes a violation of Rule 1420.1.

4. Exide may avoid the mandatory curtailments set forth in Conditions 1 through 3 by seeking a waiver from the Executive Officer. Such request for waiver must be supported by substantial and credible evidence that Exide is not the cause of the exceedance or that Exide has definitely identified and corrected the cause of the exceedance. The foregoing shall not prevent Exide from seeking relief from these requirements upon application to the Hearing Board.

5.3 Implementation Schedule for All Additional Compliance Plan Lead Emission Reduction Measures (Early Action Measures and Contingent Measures)

For ease of reference, a complete chart listing all Additional Compliance Plan Lead Emission Reduction Measures (both Early Action Measures and Contingent Measures) and their completion dates and implementation schedule can be found at Appendix A. Appendix A also includes graphics indicating the location of each activity. In addition, Appendix C sets forth the negotiated and District-approved conditions that Exide must satisfy.

6 Conclusion

The Plan described herein demonstrates that the combination of measures already undertaken (both Rule Required and voluntary Compliance Plan Early Action Measures) at the Exide Vernon facility and measures for which applications have already been submitted will be sufficient to assure future compliance with the ambient standard of 0.15 $\mu g/m^3$ established in Rule 1420.1. The primary elements of the Plan are the installation of secondary filtration on selected sources (the kiln dryer baghouse and the Torit cartridge collectors) and, most significantly, the construction of an additional large enclosure to house the facility's baghouse operational area. Completion of the pending enclosure will occur by the end of March 2012. Dispersion modeling indicates that with the completion of these projects, Exide will comply with the ambient standards (both federal and Rule 1420.1). If Exide continues to exceed the NAAQS in 2012, Exide is prepared to promptly implement additional voluntary Contingent Measures to reduce emissions.

Figures

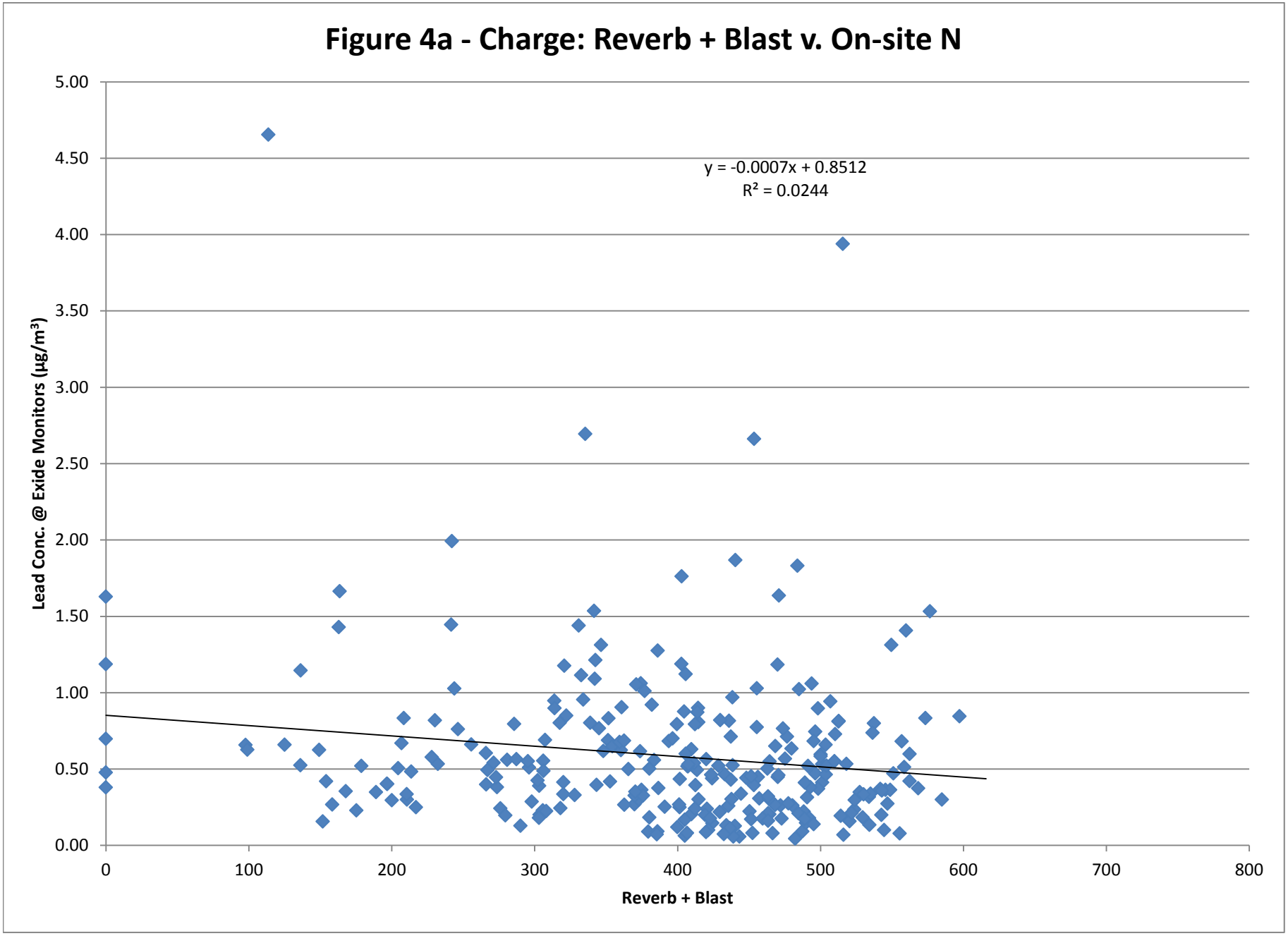
Figure 4a - Charge: Reverb + Blast v. On-site N
y = -0.0007x + 0.8512
R² = 0.0244
Lead Conc. @ Exide Monitors (µg/m³)
5.00
4.50
4.00
3.50
3.00
2.50
2.00
1.50
1.00
0.50
0.00
0
100
200
300
400
500
600
700
800
Reverb + Blast

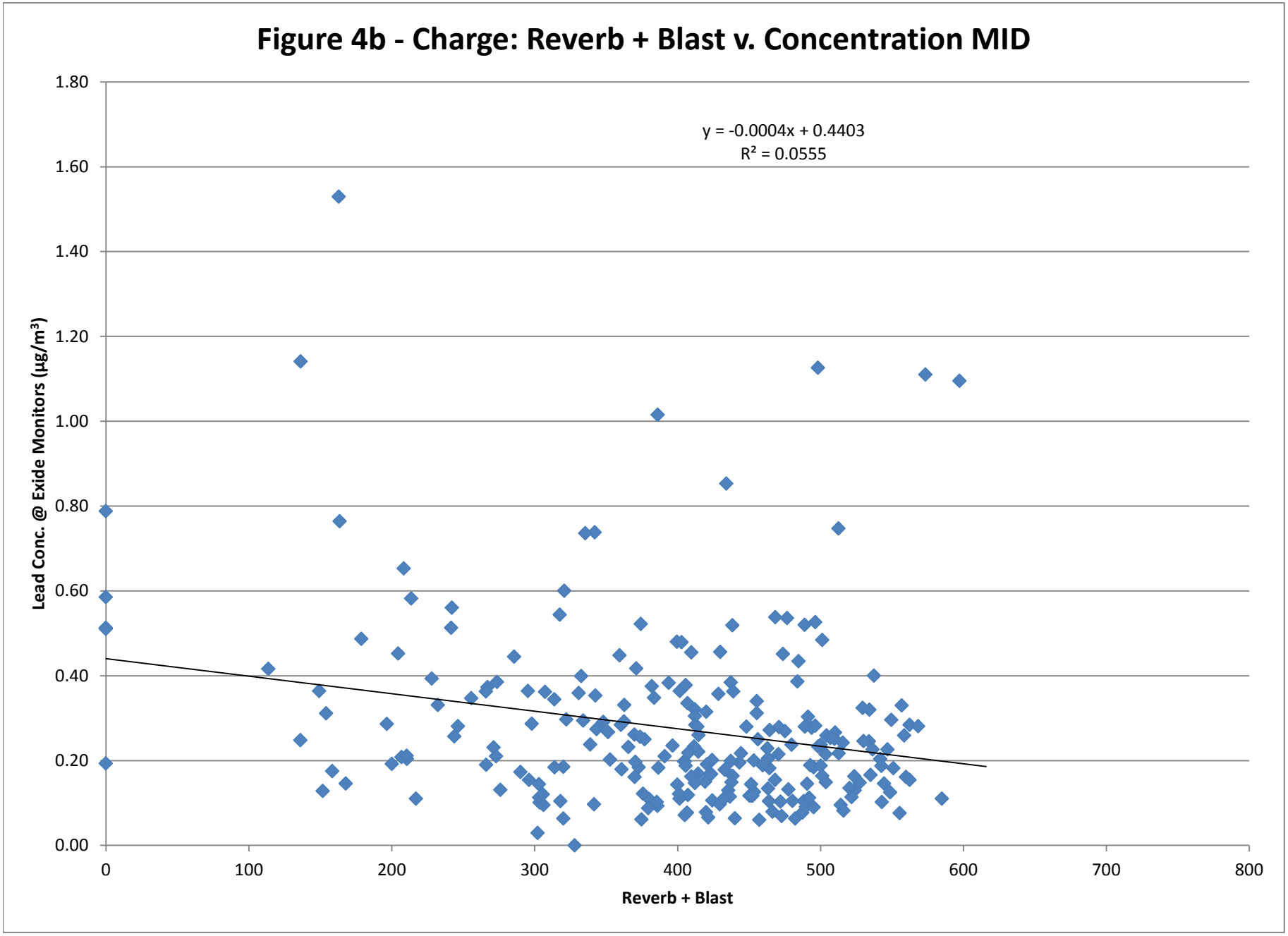
Figure 4b - Charge: Reverb + Blast v. Concentration MID
y = -0.0004x + 0.4403
R² = 0.0555
Lead Conc. @ Exide Monitors (µg/m³)
1.80
1.60
1.40
1.20
1.00
0.80
0.60
0.40
0.20
0.00
0
100
200
300
400
500
600
700
800
Reverb + Blast

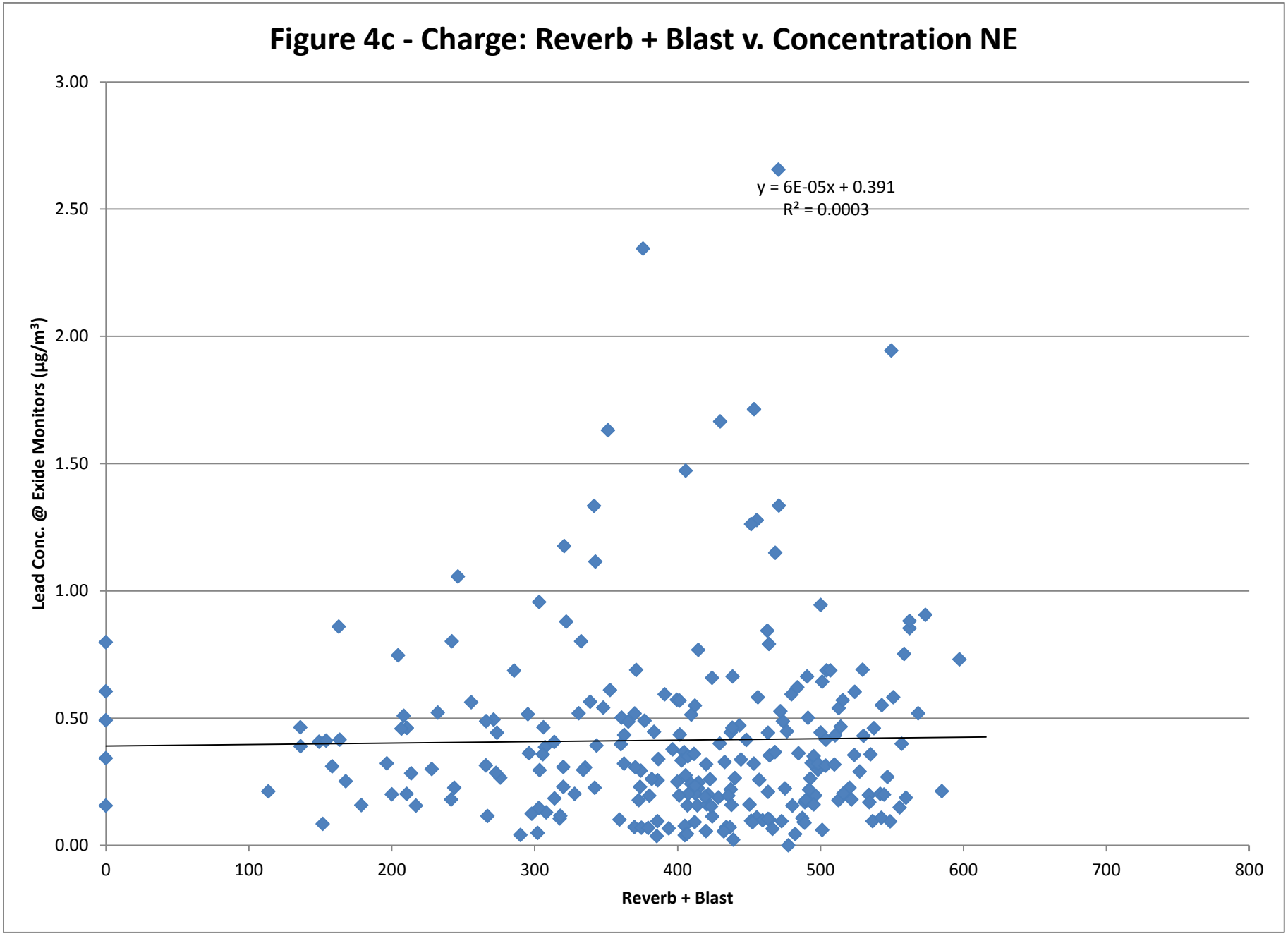
Figure 4c - Charge: Reverb + Blast v. Concentration NE
y = 6E-05x + 0.391
R² = 0.0003
Lead Conc. @ Exide Monitors (µg/m³)
3.00
2.50
2.00
1.50
1.00
0.50
0.00
0
100
200
300
400
500
600
700
800
Reverb + Blast

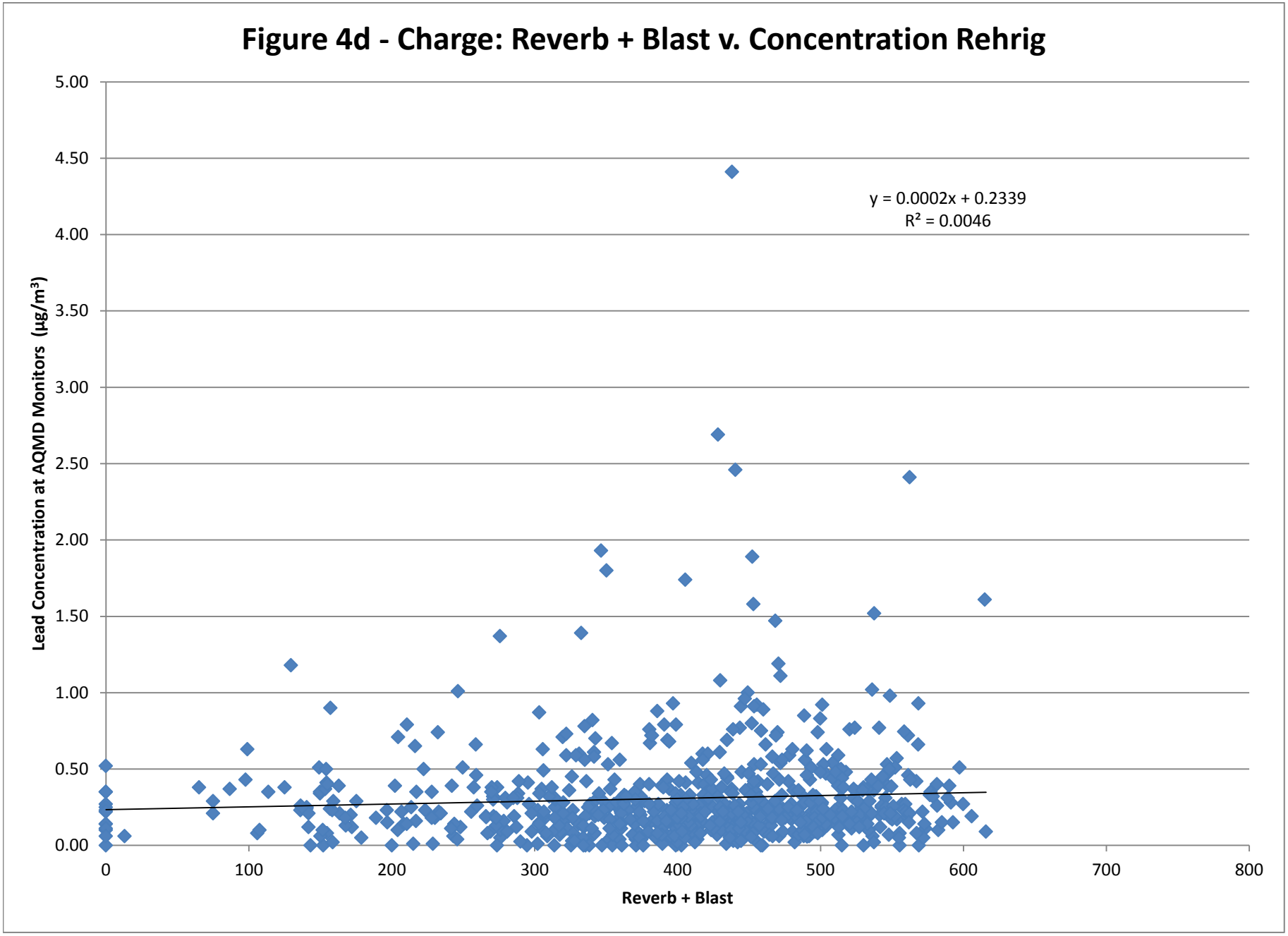
Figure 4d - Charge: Reverb + Blast v. Concentration Rehrig
y = 0.0002x + 0.2339
R² = 0.0046
Lead Concentration at AQMD Monitors (µg/m³)
5.00
4.50
4.00
3.50
3.00
2.50
2.00
1.50
1.00
0.50
0.00
0
100
200
300
400
500
600
700
800
Reverb + Blast

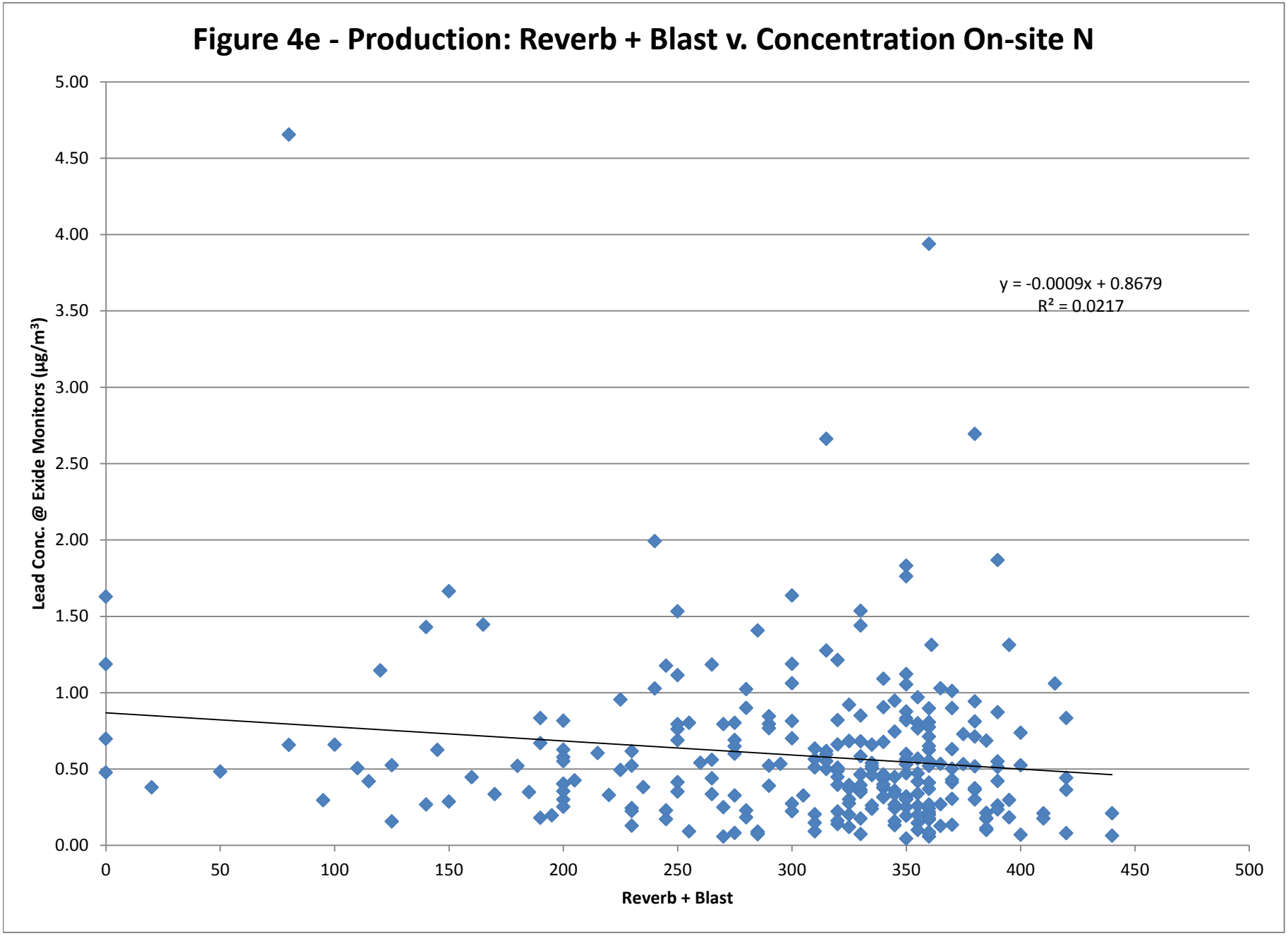
Figure 4e - Production: Reverb + Blast v. Concentration On-site N
Lead Conc. @ Exide Monitors (µg/m³)
5.00
4.50
4.00
3.50
3.00
2.50
2.00
1.50
1.00
0.50
0.00
0
50
100
150
200
250
300
350
400
450
500
Reverb + Blast
y = -0.0009x + 0.8679
R² = 0.0217

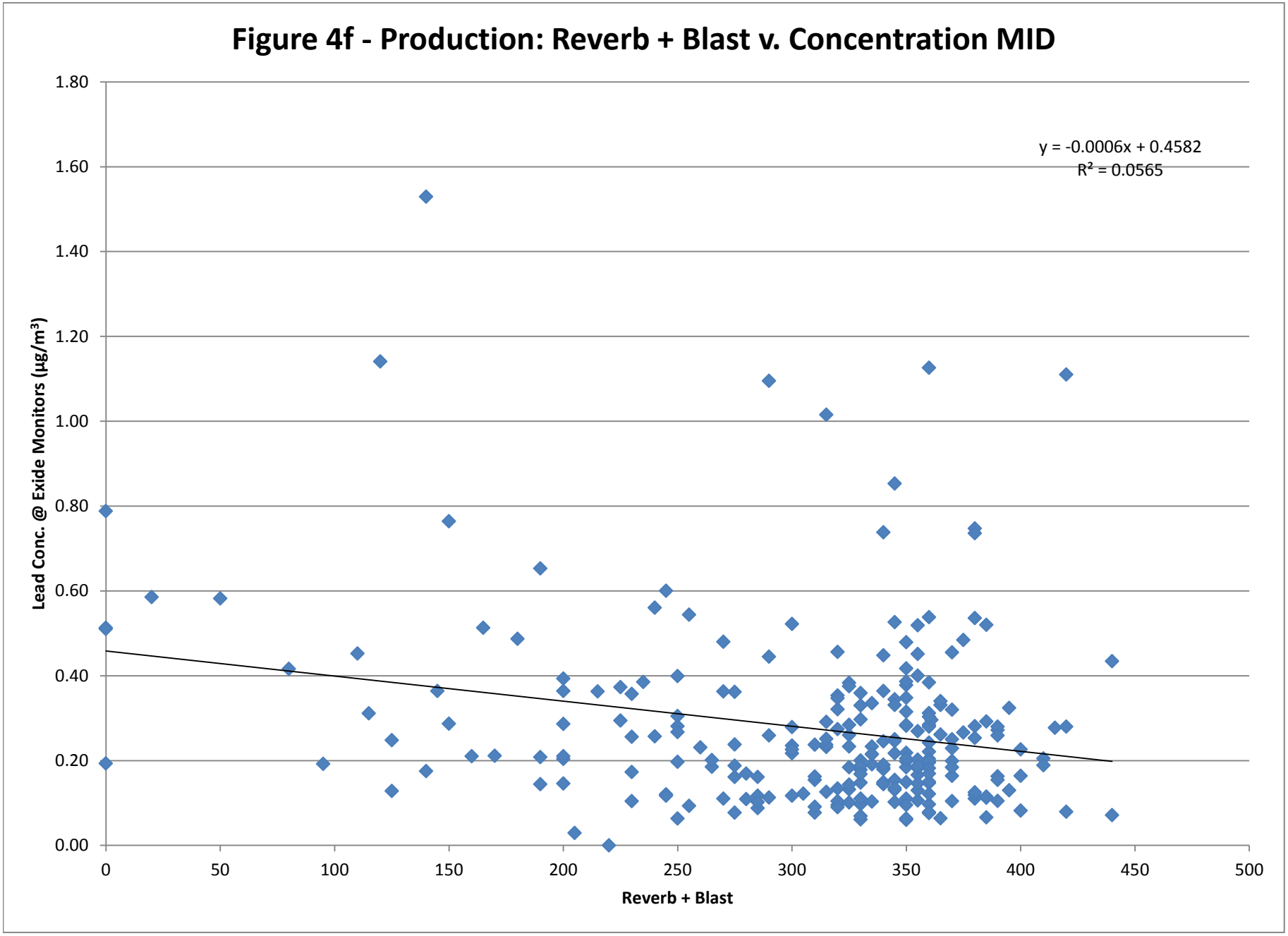
Figure 4f - Production: Reverb + Blast v. Concentration MID
y = -0.0006x + 0.4582
R² = 0.0565
Lead Conc. @ Exide Monitors (µg/m³)
1.80
1.60
1.40
1.20
1.00
0.80
0.60
0.40
0.20
0.00
0
50
100
150
200
250
300
350
400
450
500
Reverb + Blast

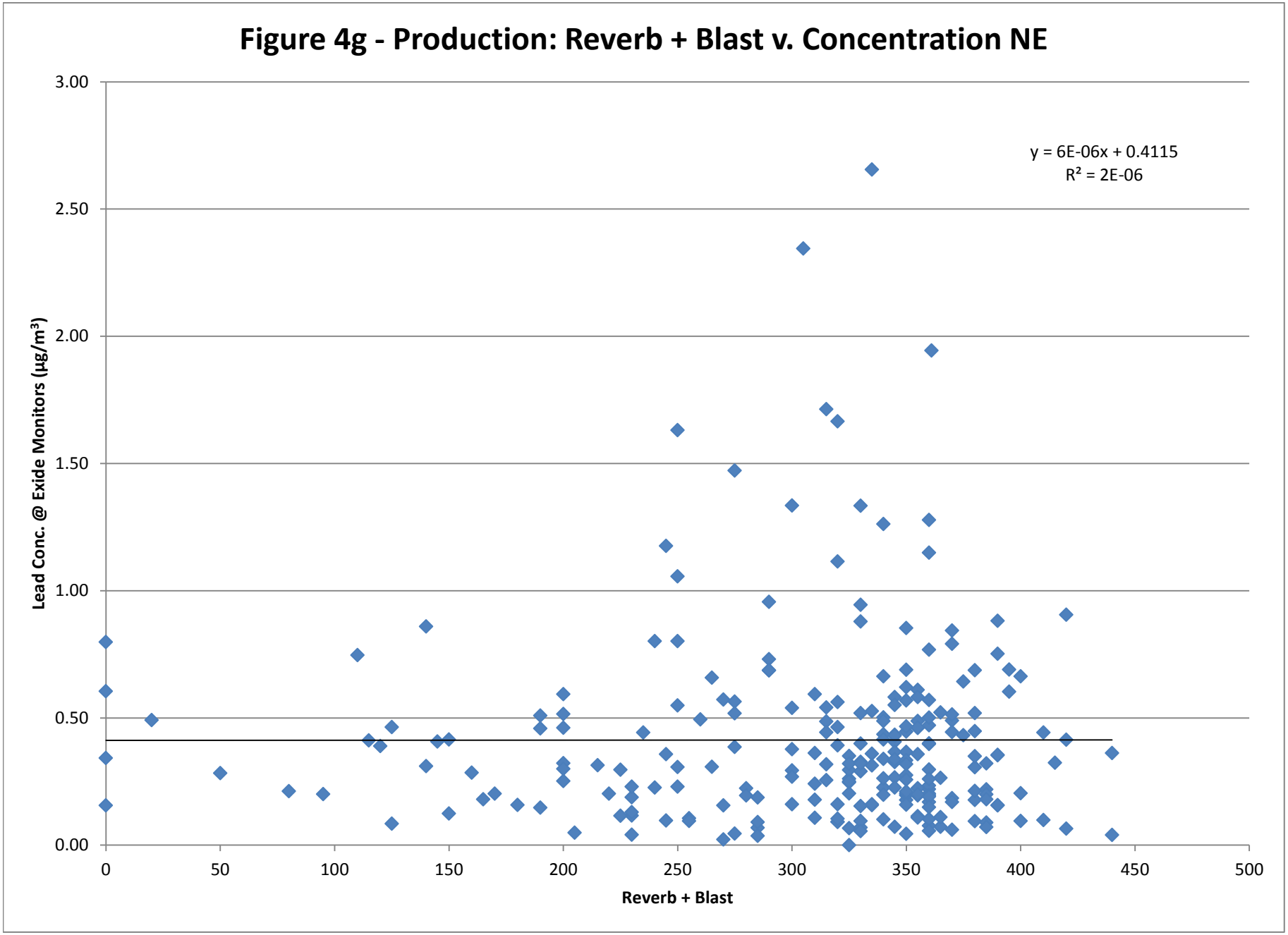
Figure 4g - Production: Reverb + Blast v. Concentration NE
y = 6E-06x + 0.4115
R² = 2E-06
Lead Conc. @ Exide Monitors (µg/m³)
3.00
2.50
2.00
1.50
1.00
0.50
0.00
0
50
100
150
200
250
300
350
400
450
500
Reverb + Blast

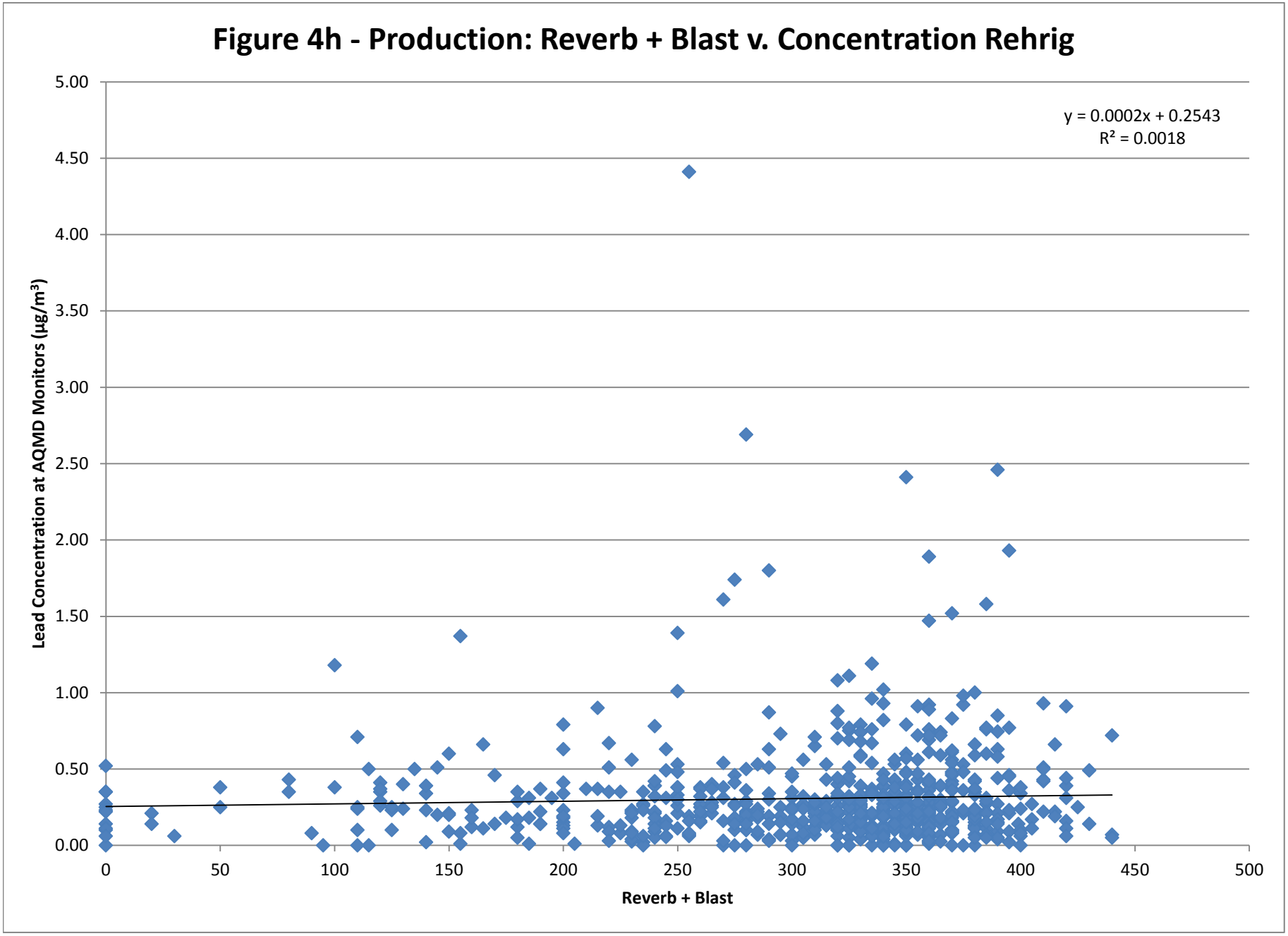
Figure 4h - Production: Reverb + Blast v. Concentration Rehrig
y = 0.0002x + 0.2543
R² = 0.0018
Lead Concentration at AQMD Monitors (µg/m³)
5.00
4.50
4.00
3.50
3.00
2.50
2.00
1.50
1.00
0.50
0.00
0
50
100
150
200
250
300
350
400
450
500
Reverb + Blast

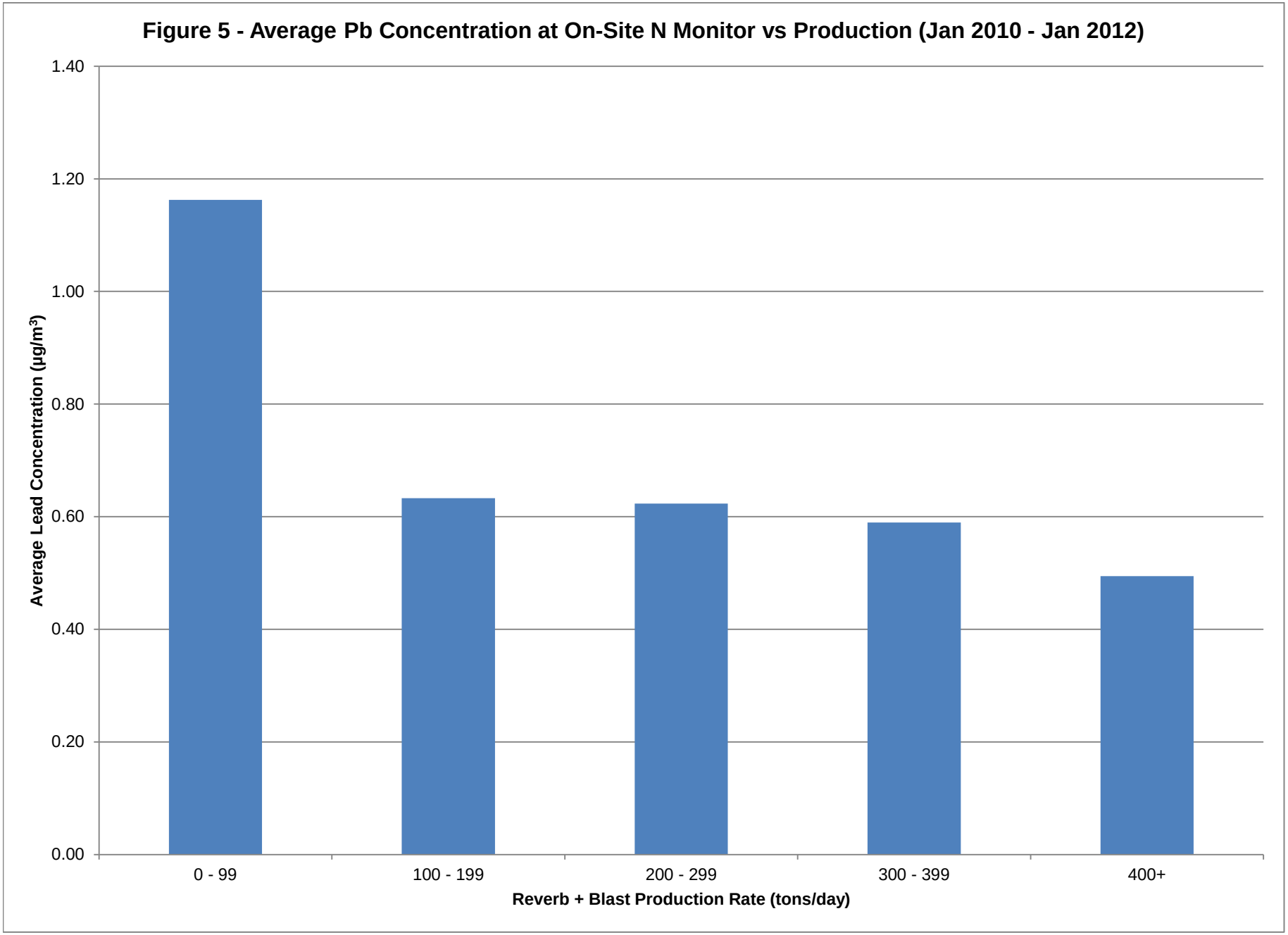
Figure 5 - Average Pb Concentration at On-Site N Monitor vs Production (Jan 2010 - Jan 2012)
Average Lead Concentration (µg/m³)
1.40
1.20
1.00
0.80
0.60
0.40
0.20
0.00
0 - 99
100 - 199
200 - 299
300 - 399
400+
Reverb + Blast Production Rate (tons/day)

Appendix A

List of Compliance Plan Measures

Appendix A – List of Compliance Plan Measures (1-20-2012)

	Action	Completion Date
1	Install door(s) between shipping and smelting to enhances negative pressure in refining/smelting and reduce draft from shipping.	Oct 2010
2	Install an automated door on the southeast end of the corridor connecting the reverb and blast feed rooms to reduce the amount of time that the door is open	Nov 2010
3	Install a new vehicle wheel wash station in the west yard of the plant	Jun 2011
4	Completely resurface the west yard of the facility to enhance the effectiveness of pavement cleaning activities	Jul 2011
5	Installed MERV 15 rated cartridge filters in the North and South Torit collectors	Jul 2011
6	Upgraded ride-on yard sweeper to a wet scrubbing unit for cleaning of plant yard pavement	Oct 2011
7	Install ventilated negative pressure enclosure for “Baghouse Row”	March/April 2012
8	Modify railcar dock at the south end of the smelting building to allow receiving of industrial plates and dedicated inside and outside forklifts.	Jun 2012
9	Replace strip curtains with doors at north and south end of RMPS building	Dec 2011
10	Install new vehicle and equipment decon and wash area at the north end of baghouse row as part of the baghouse row enclosure construction	Dec 2011
11	Eliminate and close mobile equipment wash area at south of plant	ASAP (Notify DTSC, pending DTSC approval)
12	Focused housekeeping and other horizontal surfaces in Baghouse Row, pending completion of enclosure of area	Nov 2010- Dec 2011
13	Install two backup diesel generators to supply electrical power to drive the fans serving the two process furnace exhaust baghouses and the two Torit collectors during power outages	Jun 2012
14	Install at least six (6) boot wash stations at exist of total containment buildings	June 2012
15	Designate one or more forklifts for exclusive use inside total containment buildings	June 2012
16	Apply elastomeric coating to the roof as well as vertical and horizontal surfaces of the battery breaker building to enhance the maintainability of the roof and prevent the development of pinhole leaks over time	Contingent Measure, per 5.2.2

Appendix A – List of Compliance Plan Measures (1-20-2012)

	Action	Completion Date
17	Curtailment of specific activities	Contingent. Per 5.2.7 and Appendix C Conditions 4-6
18	Potential Contingent Measures	Contingent. Per Appendix C, Conditions 8-11

Appendix B

December 1, 2011 Letter from the SCAQMD

South Coast
Air Quality Management District
21865 Copley Drive, Diamond Bar, CA 91765-4178
(909) 396-2000 · www.aqmd.gov

December 1, 2011

Corey Vodvarka
Plant Manager
EXIDE TECHNOLOGIES
2700 South Indiana Street
Vernon, CA 90058

RE: Application No. 5267885 – Rule 1420.1 Compliance Plan

Dear Mr. Vodvarka:

The South Coast Air Quality Management District (AQMD) has received your Application No. 526785, submitted on August 30, 2011, for a Rule 1420.1 (Emission Standards for Lead-Acid Battery Recycling Facilities) Compliance Plan, for your lead-acid recycling facility located at 2700 South Indiana Street, Vernon, California 90058. The application for Rule 1420.1 Compliance Plan was submitted by Exide Technologies (Exide), as required by Rule 1420.1(g), due to exceedance of ambient air lead concentrations of 0.12 ug/m3 averaged over 30 consecutive days on or beyond July 1, 2011 at one or more ambient monitors around the Exide facility. The AQMD staff has conducted a thorough review and evaluation of your Compliance Plan. Based on AQMD staff's detailed review and evaluation of your application, your Rule 1420.1 Compliance Plan is hereby disapproved for the following reasons:

1. Exide's Rule 1420.1 Compliance Plan states that compliance with the Rule 1420.1 (d)(2) limit of 0.15 $\mu g/m^3$ 30-day average ambient air lead concentration would be achieved by January 1, 2012, by the installation of a ventilated negative pressure total enclosure building over the "Baghouse Row" area. However, in a meeting held between Exide and AQMD staff on November 18, 2011, Exide informed AQMD that the total enclosure building over the Baghouse Row area will not be completed until March 2012. This construction completion date is inconsistent with the total enclosure building construction completion date of December 31, 2011, as specified in Exide's Rule 1420.1 Compliance Plan. Based upon the AQMD staff's ongoing review and assessment of ambient air monitoring data collected by both Exide and AQMD ambient monitors installed and operated around the Exide facility, periodic exceedance of 0.15 $\mu g/m^3$ 30-day average ambient air lead concentration limit of Rule 1420.1 are likely to continue after January 1, 2012, without the total enclosure building for the Baghouse Row area being completed and in full operation.

2. In addition, Exide's Rule 1420.1 Compliance Plan does not include sufficient information required under Rule 1420.1(g)(2)(A), describing additional lead emission reduction measures to achieve the ambient lead concentration of 0.15 ug/m3 averaged over any consecutive days as required under Rule 1420.1 (d)(2). Specifically, Exide's Compliance

Plan has not sufficiently considered modifications to other lead control devices and installation of multi-stage lead control devices, as required pursuant to Rule 1420.1(g)(2)(A)(iii) and (iv), and is completely inadequate in including process changes including reduced throughput and conditional curtailments, as required pursuant to Rule 1420.1(g)(2)(A)(v) and (vi). Therefore, Exide must submit additional information which is sufficient and adequate to satisfy the following subparts in Rule 1420.1 (g)(2)(A):

iii. Modifications to lead control devices;

iv. Installation of multi-stage lead control devices;

v. Process changes including reduced throughput limits; and

vi. Conditional curtailments including, at a minimum, information specifying the curtailed processes, process amounts, and length of curtailment.

Rule 1420.1(g)(3) requires that upon disapproval of a Compliance Plan, the owner or operator of a lead-acid battery recycling facility shall resubmit another Compliance Plan within 30 days following the disapproval. The resubmitted Rule 1420.1 Compliance Plan shall not be deemed acceptable unless it includes all information necessary to address deficiencies identified in this disapproval letter. Also, pursuant to Rule 1420.1(g)(3), the resubmitted Compliance Plan is subject to plan fees as specified in AQMD Rule 306.

Due to the urgency of this matter, the AQMD is requesting that Exide resubmits the required Rule 1420.1 Compliance Plan with the requested information specified above **not later than December 15, 2011**. The AQMD plans to expeditiously review the resubmitted plan by December 30, 2011.

If you have any questions concerning the disapproval of Exide's Compliance Plan application, please contact the undersigned at 909-396-2664.

Very truly yours,

Jay Chen, P.E.
Senior Engineering Manager
Engineering and Compliance

JC/CT/TGL/MAP

Cc: Mohsen Nazemi
Jill Whynot
Nancy Feldman
Ed Pupka
Application File

Exide102b.doc

Appendix C

Conditions

APPENDIX C

CONDITIONS

1. Exide shall implement all lead mitigation measures described in the Compliance Plan resubmitted by Exide in January 2012 unless otherwise specified below.

2. Exide shall install a minimum of six (6) boot wash stations at the exits of the total containment buildings at this facility. The installation of the boot wash stations shall be completed not later than June 30, 2012. Written notification shall be provided to the AQMD when installation is complete.

3. Exide shall designate one or more forklifts to be exclusively used inside of the total containment buildings so that the probability of tracking lead bearing materials outside of the containment buildings is lowered when heavy moving equipment is operated at this facility. The first forklift dedicated to indoor use only shall be implemented not later than June 30, 2012. Written notification shall be provided to the AQMD when the new forklift(s) are operational. For the purpose of this condition, any forklift operated inside of a containment building shall be completely washed and decontaminated inside of a total containment building so as to be visually free of all lead contamination prior to transferring this forklift outside of the containment building for maintenance, repair, or other purposes. A written record of equipment washing/decontamination shall be kept with regards to each forklift transferred out of a total containment building for the purposes stated in this condition and this record shall be signed by supervision or management level staff and presented to AQMD personnel upon request.

4. On and after January 1, 2012, beginning with the 30-day period of January 1, 2012 through January 30, 2012, if monitored ambient lead concentrations exceed 0.15 $\mu g/m^3$, but no more than 0.23 $\mu g/m^3$, on a rolling 30 day average at any AQMD or AQMD-approved ambient monitor, Exide shall implement the following mandatory daily process curtailments:

   A. Reduce the amount charged to the reverberatory furnace by 15 % of the daily average charged over the prior 90 days;

   B. The mandatory curtailments contained within this condition shall begin within 48 hours of the time when Exide receives the sampling results (and in the case of an AQMD monitor, the quality assurance and O&M data for the monitor). Exide shall calculate the above-referenced averages based on the total materials charged in the relevant time period above divided by the number of days when there were materials charged and shall provide supporting documentation to the District to justify the calculated averages prior to the required time of implementation. These mandatory curtailments shall remain in effect until the monitoring results at the affected monitoring station reflect 15 consecutive 30-calendar day averages of less than 0.15 $\mu g/m^3$.

5. On and after January 1, 2012, beginning with the 30-day period of January 1, 2012 through January 30, 2012, if monitored ambient lead concentrations exceed 0.23 $\mu g/m^3$, but no more than 0.30 $\mu g/m^3$, on a rolling 30 day average at any AQMD or AQMD-approved ambient monitor. Exide shall implement the following mandatory daily process curtailments:

   A. Reduce the amount charged to the reverberatory furnace by 25 % of the daily average charged over the prior 90 days;

   B. The mandatory curtailments contained within this condition shall begin within 48 hours of the time when Exide receives the sampling results (and in the case of an AQMD monitor, the quality assurance and O&M data for the monitor). Exide shall calculate the above-referenced averages based on the total materials charged in the relevant time period above divided by the number of days when there were materials charged and shall provide supporting documentation to the District to justify the calculated averages prior to the required time of implementation. These mandatory curtailments shall remain in effect until the monitoring results at the affected monitoring station reflect 15 consecutive 30-calendar day averages of less than 0.15 $\mu g/m^3$.

6. On and after January 1, 2012, beginning with the 30-day period of January 1, 2012 through January 30, 2012, if monitored ambient lead concentrations exceed 0.30 $\mu g/m^3$ on a rolling 30 day average at any AQMD or AQMD-approved ambient monitor, Exide shall implement the following mandatory daily process curtailments:

   A. Reduce the amount charged to the reverberatory furnace by 50 % of the daily average charged over the prior 90 days;

   B. The mandatory curtailments contained within this condition shall begin within 48 hours of the time when Exide receives the sampling results (and in the case of an AQMD monitor, the quality assurance and O&M data for the monitor). Exide shall calculate the above-referenced averages based on the total materials charged in the relevant time period above divided by the number of days when there were materials charged and shall provide supporting documentation to the District to justify the calculated averages prior to the required time of implementation. These mandatory curtailments shall remain in effect until the monitoring results at the affected monitoring station reflect 30 consecutive 30-calendar day averages of less than 0.15 $\mu g/m^3$ or the monitoring results at the affected monitoring station reflect ten consecutive days below 0.12 $\mu g/m^3$ and no other monitor causes a violation of Rule 1420.1.

7. Exide shall complete construction of the baghouse area Total Containment Building no later than March 31, 2012. Exide shall notify the Executive Officer of the AQMD in writing within 48 hours of completion of the construction.

8. On or after completion of construction of the baghouse area Total Containment Building, but no later than March 31, 2012, if monitored ambient lead concentrations exceed 0.15 $\mu g/m^3$ on a rolling 30 day average at any AQMD or AQMD-approved ambient monitor, Exide shall commence implementing the specific lead emission mitigation measures listed below in this condition. Each of these mitigation measures may be implemented individually or in any combination based on the specific situation and information available at the time. Within 15 days of each occurrence, Exide shall submit to the AQMD for approval the selected measure(s) to be implemented along with a description of the specific situation and available information that justifies the specific selection. An implementation timeline shall also be included and shall be established based on Exide's best effort for implementation. The selected measure(s) shall be implemented as approved by the AQMD. These specific individual mitigation measures are as follows:

A. Install an additional room ventilation baghouse or dust collector, equipped with a second stage high efficiency particulate air (HEPA) filter, with sufficient blower capacity to move a minimum of 50,000 CFM of air from one or more of the following locations:

a. The battery crusher room in the north end of the RMPS building.
b. The truck loading and unloading dock on the south end of the RMPS building.
c. The furnace room in the smelter building.
d. The cupola feed room in the south end of the smelter building.

As an alternative to adding additional ventilation with individual baghouses or dust collectors, Exide may install a single larger air pollution control system with at least 200,000 CFM of blower capacity to cover all four of these locations.

B. Install second stage HEPA filters on one or more of the following air pollution control systems:

a. The hard lead refinery baghouse (device C47).
b. The soft lead refinery baghouse (device C46).
c. The MAC baghouses venting the RMPS building (devices C156, C157).
d. The cupola furnace feed room baghouse (device C48).

C. All new HEPA filter installations performed pursuant to parts A and B of this condition shall comply with the following requirements:

a. The HEPA filters used in this equipment shall be certified, in writing, by the manufacturer to have a minimum control efficiency of 99.97 percent on 0.3 micron particles.

b. Copies of the HEPA filter certifications shall be kept and maintained on file for a minimum of 5 years and shall be provided to District personnel upon request.

D. Following completion of all required mitigation measures listed in parts A and B of this condition, Exide shall evaluate the following additional mitigation measures:

Install an additional total or partial enclosure(s) of one or more of the following locations:

a. Reverberatory furnace A-pipe.

b. Cupola furnace A-pipe.

c. Additional area enclosure(s) to be determined.

E. The mitigation measures listed in part D of this condition shall not be used to fulfill the requirements of the first paragraph of this condition unless all mitigation measures in parts A and B of this condition have first been implemented. However, Exide may voluntarily implement the measures in part D of this condition as additional voluntary measures prior to exhausting all required measures listed in parts A and B of this condition. An exception to this requirement may be made in special cases where the AQMD, upon examining all available information, has determined that an A-pipe, or other piece of equipment as applicable, is the cause for an ambient lead concentration limit exceedance. In all cases, Exide shall obtain written permission from the AQMD, and written Permits to Construct, where applicable, prior to the commencement of construction of such enclosure(s) listed in part D of this condition

9. Prior to implementing parts A and B of Condition No. 8, Exide shall first submit the required permit applications, additional information and associated fees to the AQMD and obtain the required written Permits to Construct required prior to commencement of construction.

10. For the purpose of compliance with the incremental mitigation measures in Condition No. 8, when one requirement is triggered by a violation of the 0.15 $\mu g/m^3$ rolling 30 day average lead concentration limit, a second and subsequent mitigation measure may not be required for additional violations of the 0.15 $\mu g/m^3$ rolling 30 day average lead concentration limit, until after the ongoing mitigation measure has been implemented. Exide shall notify the AQMD in writing within 48 hours of completion of each mitigation measure in Condition No. 8.

11. The specific selection and implementation of any required mitigation measure described in these conditions is subject to written approval from the AQMD. Written approval from the AQMD shall take into consideration the nature and location from each monitoring station of any event determined to be associated, or apparently associated (based on available data) with (an) ambient lead concentration exceedance(s) triggering the implementation of a required mitigation measure.

12. Exide retains the right to seek relief from these Conditions via application to the Hearing Board, as appropriate.

APPENDIX B

Ambient Air Monitoring Plan

2700 S. Indiana Street
Vernon, CA 90023

Facility ID No: 124838

AMBIENT AIR MONITORING PROTOCOL

Revised: March 9, 2010

1.0 PROJECT DESCRIPTION

This protocol is submitted in order to accurately reflect changes to the protocol dated 01 July 1994, and approved by SCAQMD on 16 January 2009 (Application No: 481923). Exide Technologies (formerly GNB) will continue to operate a network of three (6) high volume ambient air samplers, in accordance with AQMD Rule 1420, which are positioned in the following locations:

Off-site Location:
North / Rail Yard: This unit is located in the Union Pacific Rail Yard to the immediate West of the SCAQMD monitor. This is the downwind air sampler.

On-Site Locations:

Facility Corner	ID	UTM East (Km)	UTM North (Km)	Geodetic (WGS 84) Longitude	Geodetic (WGS 84) Latitude
North East	**NE**	389.849	3763.585	-118.19285	34.00710
North	**N**	389.726	3763.637	-118.19419	34.00756
Middle	**MID**	389.662	3763.484	-118.19486	34.00617
North West	**NW**	389.490	3763.548	-118.19673	34.00673
South West	**SW**	389.448	3763.454	-118.19717	34.00588
South	**S**	389.745	3763.329	-118.19394	34.00478
Admin South East	**SE**	389.818	3763.299	-118.19315	34.00452

Ambient Lead Monitor	ID	Fenceline ID	Reference Corner	Distance Along Fenceline From Reference Corner (Meters)
1	**NE**	NE-N (NE)	NE	0 ± 5
2	**N**	NE-N (OSN)	N	22 ± 10
3	**MID**	N-MID (MID)	MID	85 ± 10
4	**SW**	SW-S (SW)	SW	16 ± 10
5	**SE**	ADMIN BLDG (SE)	SE	0 ± 10

2.0 PROJECT ORGANIZATION AND RESPONSIBILITY

Exide Technologies owns the sampling equipment and is responsible for the timely reporting of analytical results to the SCAQMD in accordance with Rule 1420. Sampler operation, sample media loading and collection, calibration and maintenance of the samplers will be conducted by Almega Environmental and Technical Services under

contract/agreement with Exide Technologies. Samples will be delivered to Calscience Environmental Laboratory for analysis following chain of custody protocol. Results are reported directly to The Almega Project Manager with, all calculations being prepared by Almega. The individual 24 hour results are reported within five (5) working days to Exide Technologies. A summary report is prepared by Almega for submittal to Exide Technologies which includes individual 24 hour samples as well as the monthly average concentrations. A monthly report detailing field observations and QA/QC will be submitted to Exide Technologies and will be made available to SCAQMD upon request. The Exide Technologies Environmental Manager, or his/her designee, will submit all results in a summary report to SCAQMD. Exide Technologies will continue to monitor on a schedule consistent with SCAQMD Rule 1420 requirements (at least every 6 days).

The below listed are considered key personnel involved in the monitoring project:

NAME	COMPANY	POSITION
Ed Mopas	Exide Technologies	Env Manager
Surya Adhikari	Almega Environmental	Project Manager
Charles Figueroa	Almega Environmental	Director of Technical Services
John Phillips	Almega Environmental	President
Phillip Fines	SCAQMD	Atmospheric Monitoring Manager
Michael Haynes	SCAQMD	Enforcement Inspector

3.0 PREVENTATIVE MAINTENANCE

Sampler motors will be removed from each sampler at the end of each quarter to be refurbished with new brushes providing these have not been replaced within a reasonable time frame prior to this period. Exide Technologies will have Almega inspect all samplers and perform preventative maintenance at least monthly and as needed. The inspection will cover timers, elapsed time meters, strip chart recorders, electrical connections, power supplies, sample savers and shelter fitness.

4.0 QUALITY ASSURANCE PLAN

The QA/QC Protocol is presented in the following sections and outlines procedures and frequency for sampling and calibration as well as chain of custody protocol to be followed by Almega Environmental and Technical Services Personnel.

4.1 SAMPLING AND ANALYTICAL PROCEDURES

Analysis of all samples will follow those procedures outlined in 40 CFR 50, Appendix G "Reference Method For The Determination of Lead in Suspended Particulate Matter Collected From Ambient Air" and 40 CFR 50, Appendix A "Reference Method for The Determination of Suspended Particulate Matter in The Atmosphere (Hi-Volume Method)

(sampler operation and calibration). Appendix A to this plan contains the Standard Operating Procedure used by Calscience Environmental Laboratories in performing the lead analysis. Calscience is a Certified Laboratory operating in accordance with the National Environmental Laboratory Accreditation Program (NELAP) issued by State of California, Department of Health Services, No. 03220CA, and, Rule 1420 (Lead) – Ambient Analysis & Source Analysis methods approved by South Coast Air Quality Management District, #93LA0830.

Each ambient air sampler will be operated as a minimum every six (6) days in accordance with SCAQMD Rule 1420 and 40 CFR 50. At present, Exide Technologies samples are collected on an every three (3) day basis. The samplers operate for 24 hours during each sample run beginning at 12:00 AM and ending at 12:00 AM the following day. Each sampler is equipped with a mass flow controller, an electrical timer and a run time meter with strip chart recorder to facilitate accurate determination of actual sample run time. These are checked during filter media loading and upon collection of the sample.

Service and maintenance will be conducted by Almega Environmental and Technical Services under contract with Exide Technologies. Placement of filter media will be conducted as close to the actual sample time as is practical likewise, collection of the actual sample will occur as soon as practical following the sample event. Inclement weather and weekends / holidays may prevent absolute adherence to this schedule. With this in mind Exide Technologies contracted for the installation of automatic sample covers for those periods when active sampling does not occur.

In accordance with the Hi-Volume method, indicated flow rate records and run time meter readings will be recorded at the time of filter placement and upon removal. These data will be used in conjunction with the monitor calibration curve in calculating the sample volume referenced to standard conditions using quarterly temperature and barometric pressure data obtained from the nearest weather monitoring station. Exide Technologies will provide Almega with wind speed and direction data as recorded on the certified CEMS.

4.2 SAMPLE CUSTODY

Filters are folded lengthwise (dirty side inward) and placed into an individual clean envelope immediately upon removal by The Almega Technician. All pertinent field data is collected and/or recorded for each separate sample. The samples are marked with the appropriate sample number and sample date. This information is recorded on a chain of custody record with separate entry for each sample. The chain of custody is signed by the Almega Technician and submitted to the contract laboratory with the samples. All field data is retained by the Almega Technician for later use in performing concentration calculations and for inclusion in the monthly QA/QC report.

4.3 CALIBRATION PROCEDURES AND FREQUENCY

Each hi volume air sampler will be fitted with a refurbished vacuum motor and housing at the beginning of each calendar quarter unless replacement has occurred within an acceptable time frame during the previous quarter. Each motor and replacement motor will be calibrated by Almega Technicians prior to installation in accordance with 40 CFR 50 Appendix B. The calibration kit used by Almega is calibrated to National Bureau of Standards traceable flow rate standards annually. All calibration worksheets will be maintained for inclusion in the monthly QA/QC report. Any sampler not falling within $\pm$ 7% on a single point or full span flow rate audit will either be re-calibrated in the field or replaced with a new pre-calibrated motor.

4.4 DATA ANALYSIS, VALIDATION AND, REPORTING

Data analysis calculation equations, defining appropriate units, are presented in the Calscience Standard Operating Procedure presented in Appendix A of this plan. Valid samples must comply with the following criteria:

Sample Time: 23 – 25 Hours Sampler Flowrate: 39-60 acfm

Individual samples not satisfying these criteria will not be included in the calculation of the monthly average.

A summary report, detailing the individual 24 hour samples and monthly averages, will be submitted to SCAQMD by the 10th day of the following month. The Monthly QA/QC Report will be made available to SCAQMD upon request.

4.5 INTERNAL QUALITY CONTROL CHECKS

Exide Technologies has selected Almega Environmental and Technical Services to operate, calibrate and maintain the ambient air monitors in use at The Exide Technologies Vernon, CA Facility. Exide Technologies involvement in this program will consist of timely reporting of information as presented in section 4.4 only.

4.5 SYSTEM AND PERFORMANCE AUDITS

All system and performance audits will be conducted by Almega Environmental and Technical Services personnel in accordance with the provisions of 40 CFR 50 Appendix B. A full range flow rate audit will be performed after replacement of vacuum motors and at least once at the end of each calendar quarter. Laboratory audit procedures will be conducted in accordance with 40 CFR 50 Appendix G and existing regulatory agency approvals by Calscience Environmental Laboratories.

ATTACHMENT A

EXIDE TECHNOLOGIES, VERNON, CALIFORNIA – ONSITE AMBIENT LEAD MONITOR SITING

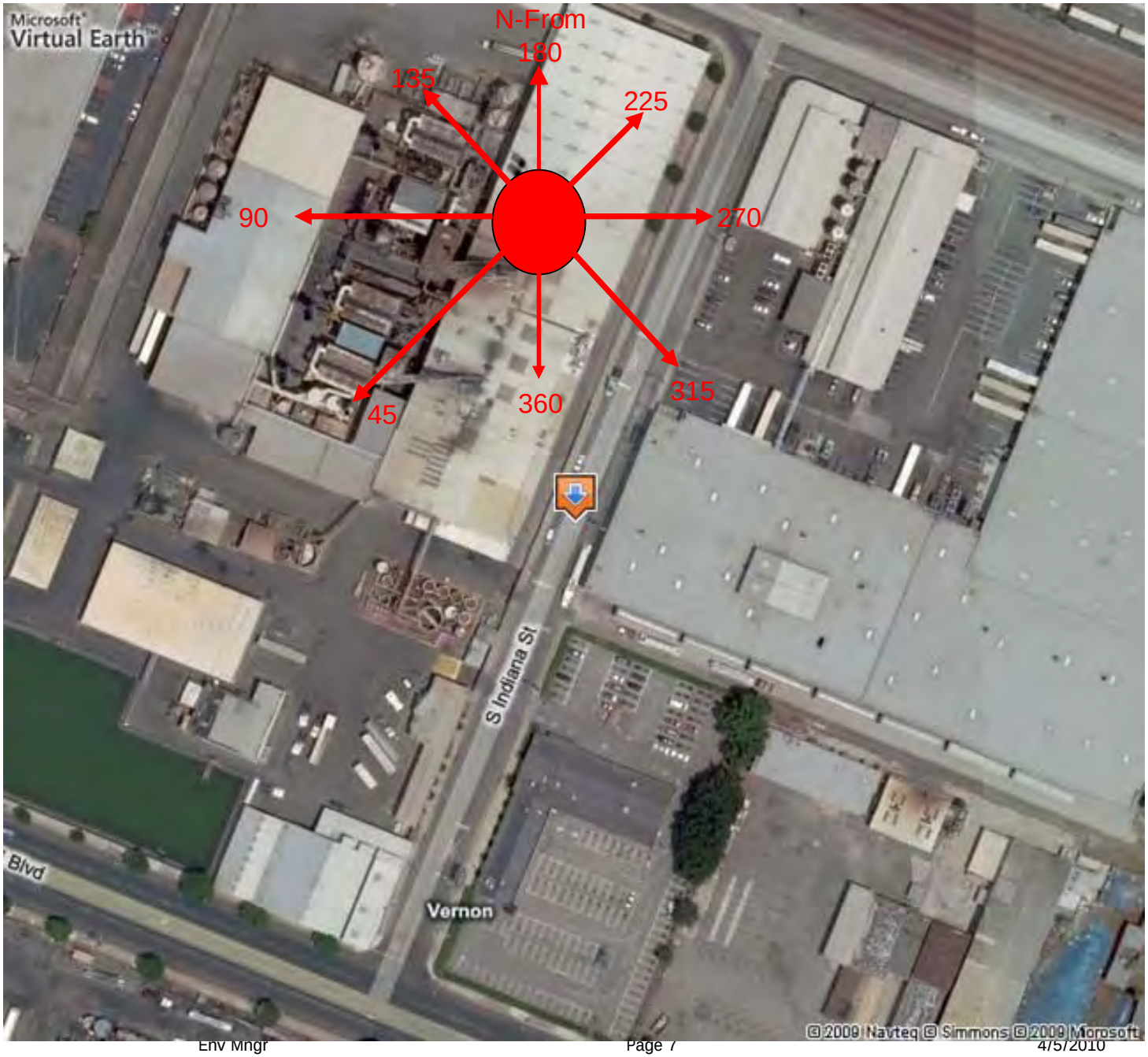

EXIDE TECHNOLOGIES SITE LOCATION FIGURE

APPENDIX C

Typical Aerosol Monitor

DUSTTRAK™ Aerosol Monitor

The DUSTTRAK™ Aerosol Monitor measures aerosols in a wide variety of environments, from offices and industrial workplaces to outdoor environmental and construction sites. TSI's DUSTTRAK provides reliable exposure assessment by measuring particle concentrations corresponding to PM10, PM2.5, PM1.0 or respirable size fractions.

The DUSTTRAK is a portable, battery-operated laser photometer which gives you a real-time digital readout with the added benefits of a built-in data logger. Suitable for clean office settings as well as harsh industrial workplaces and outdoor applications, the DUSTTRAK detects potential problems with airborne contaminants such as dust, smokes, fumes and mists.

The DUSTTRAK is easy to use, too. You can perform quick spot checks or you can program the advanced logging modes for long-term sampling. You can program the start/stop times, recording intervals and other parameters. You can even set up the instrument for continuous unattended operation.

The DUSTTRAK's new continuous analog output and adjustable alarm output allow remote access to real-time particle concentration data. Applications include site perimeter monitoring, ambient monitoring, process area monitoring and other remote uses. The alarm output with user-defined setpoint alerts you when upset or changing conditions occur. This feature allows you to program a switch closure at a concentration value of your choosing.

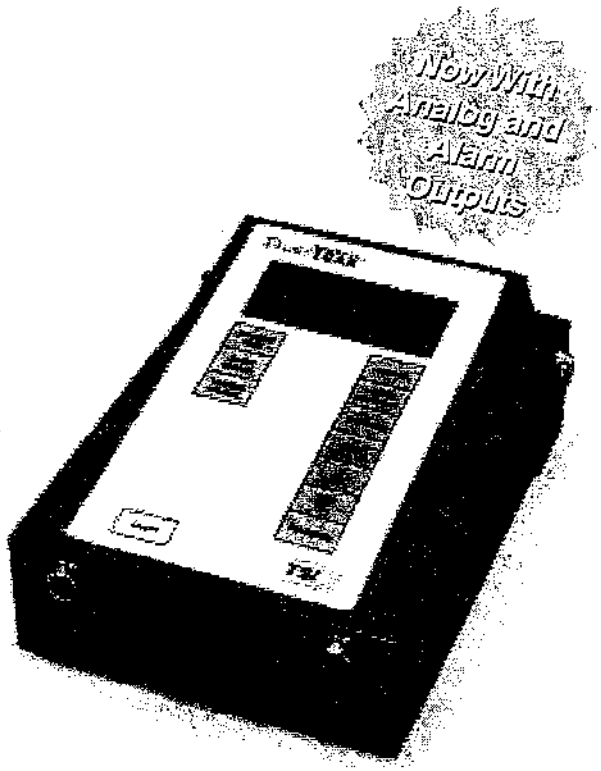

The DUSTTRAK provides a real-time measurement based on 90° light scattering. A pump draws the sample aerosol through an optics chamber where it is measured. A sheath air system isolates the aerosol in the chamber to keep the optics clean for improved reliability and low maintenance.

TSI®

Specifications

Model 8520 DustTrak Aerosol Monitor

Sensor Type	90° light scattering
Range	0.001 to 100 mg/m³ (Calibrated to ISO 12103-1, A1 test dust)
Resolution	±0.1% of reading or ±0.001 mg/m³, whichever is greater
Zero Stability	±0.001 mg/m³ over 24 hours using 10-second time-constant
Particle Size Range	0.1 to approximately 10 micrometers
Flow Rate	Adjustable 1.4 to 2.4 l/min (1.7 nominally)
Temperature Coefficient	+0.001 mg/m³ per °C (for variations from temperature at which the DustTrak was zeroed)
Operating Temperature	32° F to 120° F (0°C to 50°C)
Storage Temperature	-4° F to 140° F (-20°C to 60°C)
Operating Humidity	0 to 95% rh (non-condensing)
Time Constant	Adjustable from 1 to 60 seconds
Data Logging	31,000 data points (21 days of logging once/minute)
Logging Interval	Adjustable from 1 second to 1 hour
Physical	
External Dimensions	8.7 in. × 5.9 in. × 3.4 in. (221 mm × 150 mm × 87 mm)
Instrument Weight	3.3 pounds with batteries (1.5 kg)
Serial Interface	RS-232 1200 baud
Power	
AC	AC adapter (included)
Battery	Four C-size alkaline batteries (included)
Battery Run-time	Alkaline 16 hours

Analog Output Specifications

Analog Output Voltage	0 to 5 VDC
Analog Output Scaling[1]	0 to 100 mg/m³ 0 to 10.0 mg/m³ 0 to 1.00 mg/m³ 0 to 0.100 mg/m³
Output Impedance	0.01 ohm
Maximum Output Current	15 mA

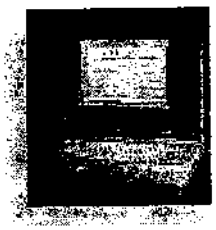

The DustTrak comes complete with TSI's TrakPro™ Data Analysis Software to allow you to perform a more comprehensive analysis of your measurement results. This exclusive Windows®-based program helps you generate the detailed graphs and reports needed to effectively communicate your findings.

Specifications are subject to change without notice.
Windows is a registered trademark of the Microsoft Corporation.

Alarm Output Specifications

Type	Non-latching, MOSFET solid state (polarized)[2] analog switch
Setpoint Range[1]	0.010 to 100 mg/m³
Maximum Voltage	15 VDC
Maximum Current	1 Amp
Deadband	-5% of alarm setpoint
Connector	4-Pin, Mini-DIN connector

1 User selectable through TrakPro™ Data Analysis Software.
2 See TSI Application Note ITI - 074 for important wiring information.

Ordering Information

Model	Description
8520	The DustTrak Aerosol Monitor and accessories includes: Auxiliary Analog and Alarm Outputs, Carrying Case, Alkaline Batteries, TrakPro™ Data Analysis Software, Filter, Computer Cable, 25-pin to 9-pin Adapter, Operation Service Manual, Calibration Certificate, 10 mm Nylon Dorr-Oliver Cyclone, Inlet Conditioning Kit 1.0 and 2.5 µm, Sampling Extension Tube, Miscellaneous Service Tools and Two-Year Warranty.

Optional Accessories

Model	Description
8520-1	Environmental Enclosure

TSI Incorporated
500 Cardigan Road, Shoreview, MN 55126 USA
Tel: 651 490 2811 Toll Free: 1 800 874 2811 Fax: 651 490 3824 E-mail: answers@tsi.com
TSI Germany—Tel: +49-241-523030 Fax: +49-241-5230349 E-mail: tsigmbh@tsi.com
TSI Sweden—Tel: +46-18-52-70-00 Fax: +46-18-52-70-70 E-mail: tsi@tsi.se

For current information
www.tsi.com

P/N 2980077 Rev C
Copyright © 2002 by TSI Incorporated
Printed in U.S.A.

DUSTTRAK®
Environmental Enclosure

The DUSTTRAK™ Aerosol Monitor is a portable, battery-operated, laser-photometer that measures and records airborne dust concentrations. The DUSTTRAK has been used to measure aerosols in a wide variety of environments, from offices to industrial workplaces. Now the DUSTTRAK has a weatherproof Environmental Enclosure accessory for making the same accurate and precise measurements outdoors.

The Environmental Enclosure can be used in conjunction with the DUSTTRAK for many different applications. While its primary use is in outdoor applications, the enclosure and extended-life battery may also be advantageous in indoor industrial applications to provide additional security and protection to the instrument.

The Environmental Enclosure comes with a sampling inlet specifically designed to sample efficiently in a broad range of wind conditions. The enclosure also contains a water trap that prevents precipitation from entering the instrument. The extended-life, lead acid batteries that are included with the enclosure permit continuous, 24-hour operation. Two batteries are supplied with the unit, allowing one battery to be charged while the other is in operation. The rugged enclosure provides a secure method of storing and transporting the DUSTTRAK and its accessories.

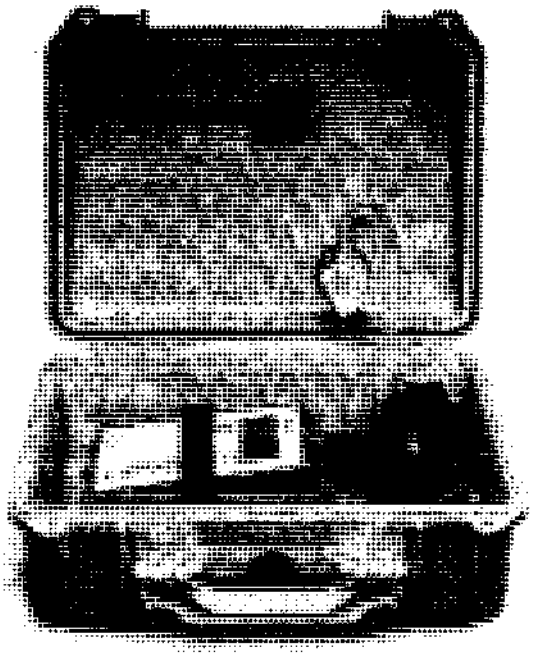

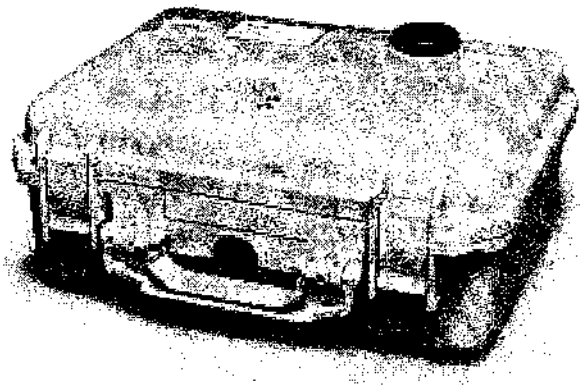

The DUSTTRAK Aerosol Monitor has an easy-to-read digital display showing real-time concentrations in milligrams per cubic meter (mg/m^3) while simultaneously logging data into memory. The DUSTTRAK has enough memory to record weeks worth of data...even at one-minute intervals. The unique sheath air system provides consistent performance in the dirtiest environments. Critical lenses are isolated from particle-laden flows by surrounding the sample with filtered air. Particles can't collect on surfaces they never touch!

TSI®

The Environmental Enclosure may be mounted to a standard surveyor tripod equipped with a 5/8"-11 threaded stud. The enclosure should be set up in a location where it can easily sample the particles of interest. It should be placed away from obstructions which may affect wind currents. The sampling inlet on the Environmental Enclosure samples most efficiently from 0 to 22 mph.

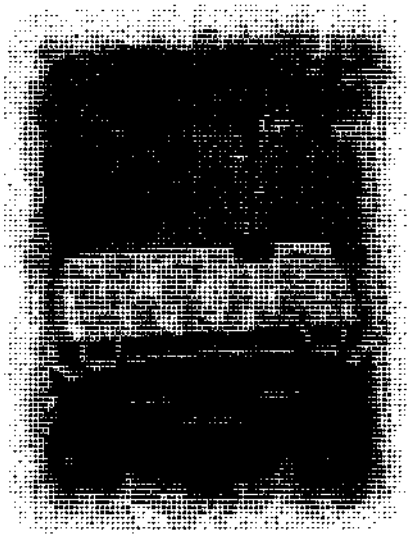

Monitoring applications include:

- Environmental site perimeters
- Fugitive dust emissions
- Dust control
- Construction sites
- Harsh industrial environments
- Urban pollution

Specifications

Environmental Enclosure Model 8520-1

Sampling Conditions	
Operating Temperature	32 to 120°F (0 to 50°C)
Wind Speed	0 to 22.5 mph (0 to 10 m/s)
Aerosol Concentration Range	0.001 to 100 mg/m³ (Calibrated to ISO 12103-1, A1 test dust)
Storage Temperature	-4 to 140°F (-20 to 60°C)
Zero Stability	±0.001 mg/m³ over 24 hours using 10-second time-constant
Particle Size Range	0.1 to approximately 10 micrometers (Upper limit is dependent on flow rate)
Flow Rate	1.7 L/min
Temperature Coefficient	+0.001 mg/m³ per °C (for variations from temperature at which DUSTTRAK was zeroed)
Physical	
External Dimensions	16 in. × 13 in. × 7.5 in. (406 mm × 330 mm × 191 mm)
Weight (with battery and DUSTTRAK)	15.8 lb (7.2 kg)

User Maintenance	
Maintenance Check/ Data Collection	Recommended daily, but longer intervals allowed based on battery usage.
Clean Inlet	Weekly, under normal conditions, or daily if concentrations are over 30 mg/cm³
Re-grease O-rings	As needed
Power Requirements	
External Battery Pack	6 VDC, 10 Ah
Battery Run-time	24 to 60 hours (typical)
Battery Charge Time	13 hours at 72°F (22°C) (New battery, deep discharge to 95% charge)

Specifications are subject to change without notice.

Ordering Information

Model	Description
8520-1	Environmental Enclosure includes: Two Battery Packs, Battery Charger, Omni-directional Sampling Inlet, Dust Caps, Tubing, Plug, and O-rings.

TSI.

TSI Incorporated
500 Cardigan Road, Shoreview, MN 55126 USA
Tel: 651 490 2811 Toll Free: 1 800 874 2811 Fax: 651 490 3824 E-mail: answers@tsi.com
TSI Germany—Tel: +49-241-523030 Fax: +49-241-5230349 E-mail: tsigmbh@tsi.com
TSI Sweden—Tel: +46-18-52-70-00 Fax: +46-18-52-70-70 E-mail: tsi@tsi.se

For current information www.tsi.com

CERTIFIED ISO 9001

P/N 2980098 Rev. C

Copyright © 2002 by TSI Incorporated

Printed in U.S.A.

DUSTTRAK™ Aerosol Monitor

Model 8520

Frequently Asked Questions

» Back to Frequently Asked Question

Print This Page

Related Items
» Application Notes
» Technical Notes
» Service
» Support

- General Questions
- TrakPro/Data Logging Questions

General

1. **How often is calibration required?**
   TSI recommends returning the instrument to the factory for cleaning and calibration on an annual basis. Turnaround time is typically 2 to 3 working days after receipt of the unit with proper documentation. Recommended user maintenance schedules for routine cleaning, filter replacement, and zero check is covered in the Operation and Service Manual.

2. **What U.S. standards or guidelines apply to ambient particulate levels in buildings?**

   ASHRAE 62-1989 states:
   "Indoor air quality shall be considered acceptable if the required rates of acceptable outdoor air are provided for the occupied space." ASHRAE 62-1989 references the national primary ambient-air quality standard for outdoor air as set by the U.S. EPA.

   Long term--50 μg/m³ concentration average over 1 year (0.05 mg/m³)
   Short term--150 μg/m³ concentration average over 24 hours (0.150 mg/m³)

   Although this standard was developed for outdoor air, current thinking by industry experts is that indoor air quality should be as good as that of the outdoor air.

   Exposure values for specific substances are published by OSHA (Occupational Safety and Health Administration), NIOSH (National Institute for Occupational Safety and Health), and ACGIH (American Conference of Governmental Industrial Hygienists).

3. **Can I measure other particle size ranges with the DUSTTRAK?**
Yes. The DUSTTRAK is supplied with inlet conditioners (impactors) that limit the upper size to 2.5 or 1.0 microns. Additionally, the DUSTTRAK is supplied with a 10-millimeter Nylon Dorr-Oliver Cyclone for respirable sampling with a cut-off at 4 microns.

---

4. **What type of device is the DUSTTRAK aerosol monitor?**
The DUSTTRAK is a laser photometer. The sensing mechanism consists of a laser diode directed at the aerosol stream. Scattered light is collected with optics and a photodetector at 90° to the light beam. The intensity of the scattered light is a function of the particle mass concentration.

---

5. **Can I use the DUSTTRAK outdoors?**

Yes. The DUSTTRAK has been used outdoors but it is no considered weatherproof, so it is not suitable for long-term, unattended operation. However, the optional Environmental Enclosure is designed to protect the DUSTTRAK from harsh weather conditions. It is also sometimes used indoors if the environment is particularly demanding. Click here for details on the Environmental Enclosure.

---

6. **How long will the DUSTTRAK monitor operate before the internal filter overloads in an environment containing 3-5 mg/m³ dust?**

At a 5 mg/m³ concentration, the internal nozzle requires cleaning at 70-hour operation intervals and the internal filter must be replaced after 140 hours of operation. This subject is covered in the Operation and Service Manual.

---

7. **Can I measure respirable aerosol mass concentration with the DUSTTRAK monitor?**
Yes. The DUSTTRAK is supplied with a 10 millimeter Nylon Dorr-Oliver Cyclone which provides a particle size cut-off at 4 microns (internationally accepted as the 50% cut-off size for respirable aerosol mass).

---

8. **What is the measurement range of the DUSTTRAK monitor?**
The mass concentration range is 0.001 to 100 mg/m³. The particle size range is 0.1 to 10 microns.

---

9. **Can I change the calibration constant to correspond to a different aerosol such as coal dust or oil mist?**
Yes. Factory calibration to the standard ISO Test Dust is assigned a calibration constant of 1.00. You may change the calibration constant using the procedure outlined in the DUSTTRAK manual. Factory calibration can be restored by resetting the calibration to 1.00.

10. **How does sampling in high humidity affect the readings obtained from the DUSTTRAK?**
Relative humidity higher than 80 percent can cause particle concentration readings to be biased high from the actual concentration of dry particles. The amount that an aerosol's mass concentration increases due to water absorption is a complex function of the particle's material and the atmosphere's absolute humidity (i.e. specific humidity). This humidity effect can bias the DUSTTRAK's readings up to 60 percent high in the most extreme conditions of high temperature and high relative humidity.

11. **What are the differences between Log 1, Log 2, and Log 3 modes?**

Log 1 mode requires a manual start/stop action. Logging interval and time constant may be set from the keypad.

Log 2 and Log 3 modes provide automatic start/stop logging for unattended operation. The two modes are identical in their basic operation, but may be programmed individually using a PC compatible computer and TRAKPRO software. The following items may be defined:

- Start date
- Start time
- Test length
- Logging interval
- Number of tests
- Time delay between tests

After Log 2 and Log 3 protocols have been defined using TRAKPRO software, the Q-TRAK Plus/DUSTTRAK will retain the programmed information.

12. **Is the DUSTTRAK aerosol monitor intrinsically safe?**
No. The DUSTTRAK has not been tested or certified for operation in a hazardous area where intrinsic safety is required.

13. **Do statistics relate to the total time the instrument is turned on or only to the time sampling is taking place?**
Statistics are collected only during the time sampling is taking place. This is true whether you are operating in the Survey mode or Logging mode.

14. **Will the DUSTTRAK measure liquid aerosols such as water and oil?**
Yes. A major advantage of using the DUSTTRAK is its ability to measure volatile aerosols such as water and oil. These cannot be measured accurately gravimetrically because of evaporation from the collection filter.

15. **What are the traceability specifications?**
There is no National Institute of Standards and Technology (NIST)

standard for optical mass measurements. Calibration of the DUSTTRAK is performed by TSI using Emery oilmist aerosol and nominally adjusted to the respirable mass of standard ISO 12103-1, A1 test dust (formerly called Arizona test dust).

---

16. **What batteries are used in the DUSTTRAK, and how long do they last?**
The DUSTTRAK is shipped with four standard C-size alkaline batteries. Quality alkaline batteries will provide about 16 hours of operation. Nickel cadmium (NiCd) batteries may be used in the DUSTTRAK, but must be recharged in an external charger provided by the user. Operating time using fully charged NiCd batteries will be about 6 hours. For long-term measurement, the DUSTTRAK may be operated on AC power using the adaptor supplied with the instrument. If the DUSTTRAK is powered by the batteries included with the optional Environmental Enclosure, the battery life is at least 24 hours in very cold weather extremes. Click here for details on the life of the batteries included with the Environmental Enclosure.

---

17. **What happens if my batteries die during a measurement?**
Low battery charge is indicated by a battery symbol on the display. The DUSTTRAK will continue to operate for approximately 60 minutes before measurement and logging functions stop. Power will shut off automatically, but the logged data will be retained by an internal lithium backup battery.

---

18. **Can I use a different cyclone filter on the DUSTTRAK?**
Yes. The flow rate of the DUSTTRAK may need to be adjusted to the rate specified with the new cyclone. Flow rate can be adjusted between 1.4 and 2.4 L/min using the flow meter provided with the DUSTTRAK.

---

19. **Can I connect a computer to the DUSTTRAK for continuous monitoring?**
Yes. An enhancement made in November 1996 allows the DUSTTRAK to do serial data acquisition using simple ASCII commands. The DUSTTRAK can be set up to provide a reading once per interval (from 0 to 60 seconds) or to output a single concentration reading. Request Application Note ITI-044 for more information.

---

20. **What length of sample tube can be used with the DUSTTRAK monitor?**
The DUSTTRAK is supplied with a 4 foot sampling tube. Using a sampling tube longer than 4 feet is not recommended because particle transport losses in the tube may adversely affect the measurement.

---

21. **Where can I get a connector to mate with the 4-pin, mini-DIN output connector on the back of the DUSTTRAK?**
Connectors are commercially available. Just specify a male, 4-pin, mini-DIN connector.

---

22. **Can I use the DUSTTRAK aerosol monitor to**

determine when air system filters need to be changed or cleaned?
Yes. If you have established the particle level at which the filters need service, you can use the DUSTTRAK to monitor current operating conditions. Since no alarm or set point capability is provided in the DUSTTRAK, it would be necessary to observe conditions manually.

---

23. **Can I use the DUSTTRAK for remote monitoring applications?**
Yes. The DUSTTRAK can be used to monitor aerosol mass concentrations in real-time by transmitting data from remote locations via the analog or serial output features. This real-time information can be used for a variety of remote monitoring applications such as environmental site perimeter monitoring, ambient work area monitoring, and process area monitoring.

---

24. **Can the Log 1, Log 2, and Log 3 modes be operating at the same time?**
No. Only one logging function can be activated at a time.

---

25. **If I need to have laboratory analysis performed to obtain independent data, how can the DUSTTRAK aerosol monitor help me?**
The DUSTTRAK can be used for real-time evaluation of aerosol concentration during sample collection for laboratory analysis. Gravimetric samples only provide an average of concentration over the total collection period.

The DUSTTRAK also provides assurance and a record of conditions during the periods between laboratory analysis tests. The DUSTTRAK can be a valuable tool in troubleshooting suspected problem areas or monitoring changing conditions.

---

26. **How do I tell if my DUSTTRAK has the analog and alarm output features?**
All DUSTTRAKS have the analog output and alarm functions as of 10/18/00 beginning with serial number 22499. You can visually verify if your DUSTTRAK is equipped with these features. Look for the 4-pin. mini-DIN connector labeled "Analog/Alarm Output". It is located on the backside of the instrument. All DUSTTRAKS with serial numbers from 21960 to 22498 can be upgraded to incorporate these functions for a nominal fee. Older DUSTTRAKS with serial numbers lower than 21960 cannot be upgraded to incorporate this new feature. Click here for upgrade information.

---

27. **How much data can be logged before the DUSTTRAK runs out of memory?**
The DUSTTRAK can log over 31,000 data points, or 21 days of data stored at 1-minute intervals. Logging intervals may be longer or shorter as set by the user.

---

28. **Can I adjust the alarm setpoint without using TRAKPRO software?**
No. TRAKPRO software version 3.1 or higher is required to control the

alarm and analog output functions. The DUSTTRAK is shipped from the factory with the alarm setpoint at 0.100 mg/m³ and with the alarm function turned "off".

---

29. **Can logged data be transferred to another database or spreadsheet for reporting or data analysis?**
Yes. Using TRAKPRO software, data can be exported in standard comma-delimited ASCII format. Most spreadsheet and database programs can read this format.

---

30. **What happens to the analog output signal if the measured aerosol concentration exceeds the programmed scaling limit?**
If the DUSTTRAK measures aerosol mass concentrations that are greater than the selected scaling range, the analog output voltage will remain fixed at the maximum of 5.0 volts.

---

31. **I purchased my DUSTTRAK before the analog and alarm features were available. Can I upgrade my DUSTTRAK?**

All DUSTTRAKS with serial numbers from 21960 to 22498 can be upgraded to incorporate these functions for a nominal fee. Older DUSTTRAKS with serial numbers lower than 21960 cannot be upgraded to incorporate this new feature. Click here for upgrade information.

---

32. **What is the warm-up time of the DUSTTRAK?**
When the DUSTTRAK is first turned on, it takes about a minute for the instrument to settle down to a stable reading. After warm-up, stable readings can be obtained in 10-15 seconds.

---

33. **How long can the cable be for transmitting the DUSTTRAK'S 0-5 VDC analog output?**

We have successfully transmitted the 0-5 VDC signal 100 feet using 22 gauge wire without any degredation (voltage drop) in the signal. However, if signal transmission is required over distances greater than 100 feet (30 meters), then a 0-5 VDC to 4-20 mA signal converter should be considered. See TSI Application Note ITI-073 for additional information.

---

34. **Where do I find technical information on interfacing and using the DUSTTRAK analog output and alarm functions?**

This technical information can be found in TSI Application Note ITI-073 and Application Note ITI-074 for the analog and alarm output functions, respectively.

---

35. **How can I convert the DUSTTRAK'S 0-5 VDC analog output to a current output such as 4-20 mA?**

By using a standard signal converter that converts 0-5 VDC to 4-20 mA. See TSI Application Note ITI-073 for additional information.

---

36. **What happens if the data logger memory becomes full?**

If the data logger becomes full, the test in progress will stop. Information stored up to that point will be retained in the data logger.

---

37. **Is logged data retained if I change the instrument batteries?**

Yes. There is an internal backup battery that protects all stored data. The battery is designed to last for more than 10 years.

---

38. **How long is the warranty on the DUSTTRAK monitor?**

The DUSTTRAK is warranted to be free from defacts in workmanship and material for a period of twenty-four months from the date of shipment to the customer. See the Operation and Service Manual for detailed warranty terms and conditions.

---

39. **What is the analog output resolution in volts per milligram/m³?**

The analog output resolution is a function of the scaling range selected. See TSI Application Note ITI-073 for more detailed information.

Top

TrakPro/Data Logging

1. **Can we copy the software for use on other computers?**

Yes. The software is copyrighted, but may be copied to enable use of TSI products with several computers.

---

2. **What does the TRAKPRO software allow me to do?**

TRAKPRO Data Analysis Software has numerous functions:

- Download (receive) stored data from the Q-TRAK Plus, DUSTTRAK, PROTECTAIR, and P-TRAK data logger.
- Store test data to disk.
- Display data in table or graphical form.
- Send table or graphical information to a monochrome or color printer.
- Combine multiple data sets into a single graph for comparison purposes. Up to six channels of data may be presented from tests run at the same time or at different times.

- Create graph titles, annotate graphs, change scales.
- Print graphs on monochrome or color printers.
- Export data to other database or spreadsheet software via comma-delimited ASCII data file.
- Set date and time functions in the Q-TRAK Plus, DUSTTRAK, PROTECTAIR, and P-TRAK.
- Alter the selection of logging intervals and time constants available for Log 1 in the Q-TRAK Plus/DUSTTRAK/P-TRAK.
- Define & upload data logging protocols (log 2 & log 3) used by the Q-TRAK Plus/DUSTTRAK/P-TRAK for unattended operation.

- **What is the cost of the TRAKPRO software?**
  TRAKPRO Data Analysis Software is provided at no additional charge.

- **I'm not a computer expert. What is the easiest way to understand the software?**
  TRAKPRO software delivered with the Q-TRAK Plus IAQ Monitor or DUSTTRAK aerosol monitor includes example data. These files contain test examples useful for learning how the software operates independent of the instrument.

- **What are the computer requirements for TRAKPRO Data Analysis Software?**
- Windows® 95, 98, ME, NT, or 2000
- RS-232 Serial Port

Top

TSI Incorporated Copyright 2007 TSI Incorporated. All rights reserved

TSI Incorporated
500 Cardigan Road, Shoreview, MN 55126 U.S.A
E-mail: info@tsi.com
Telephone: +1 651-490-2811
Toll Free: 1-800-874-2811
Fax: +1 651-490-3824

Terms and Conditions | Privacy Policy | Copyright | WEEE and RoHS Directive | Contact Us
TSI Suppliers-Purchase Order Terms and Conditions | TSI Sales Terms and Conditions

DUSTTRAK™ Environmental Enclosure

Model 8520-1

Frequently Asked Questions

» Back to Frequently Asked Question

Related Items
» Application Notes
» Technical Notes

Print This Page

1. **Can I leave the Environmental Enclosure out in the rain?**
   Yes. The case is weather resistant. It can tolerate all weather conditions. *It should not be placed in direct contact with the ground.*

2. **What is the maximum particle concentration that the Environmental Enclosure can handle?**

   The Environmental Enclosure adds no constraints on the DUSTTRAK and can be used in particle concentrations up to the DUSTTRAK's maximum of 100 mg/m^3.

3. **Which DUSTTRAK size-conditioning inlets can I use in conjunction with the Environmental Enclosure?**
   The Environmental Enclosure is compatible with the 1.0, 2.5, and 10.0 micrometer size-conditioning inlets (impactors) supplied with the DUSTTRAK. The TSI-supplied cyclone (P/N 800665) is not compatible with the Environmental Enclosure.

4. **Where is the best place to set up the Environmental Enclosure?**
   The Environmental Enclosure can be set up and operated effectively in most outdoor locations. Rooftops, bench tops, fields, and ditches are all examples of places you could place the Environmental Enclosure. The inlet tube must be oriented substantially perpendicular to the ground and in a place where there are no obstructions that will disturb the air flow around it. Look for a location with consistent, stable wind conditions, and without swirling turbulence. Trees, buildings, or other large objects will cause flow distrubance around the aerosol inlet and adversely affect readings. The best rule of thumb is to put it in the most open area available.

5. **Does direct sunlight cause a heat problem within the Enclosure?**
   No. The light gray color acts as a thermal insulator. This will prevent an increase of the temperature inside the Enclosure above the ambient

temperature. The thermal mass of the Enclosure will also dampen temperature fluctuations normally experienced outdoors.

---

6. **Can I use another battery charger to charge my battery packs?**
This is not recommended. The charger provided with the Environmental Enclosure (part no. 801564) has been designed to match the needs of this battery pack. Using another charger could result in severe damage to the battery. The charger charges at 7.5 volts, 850 mA and automatically stops when full charge is reached. The battery is a 6-volt sealed lead-acid type with a rating of 10 amp-hours.

---

7. **How often do I need to clean the aerosol inlet?**

The inlet does not easily clog with debris and can be operated confidently for an extended period of time without cleaning under most conditions. If the Environmental Enclosure is being operated in high concentrations (more than 20 mg/m^3 the inlet may need frequent cleaning. The inlet should be kept clean to prevent debris from constricting the flow. The best way to clean the inlet is to unscrew it from the Enclosure and blow it out from its threaded end (base). If readings are abnormally low make sure that the inlet is clean, and blow it out periodically as a precautionary measure.

---

8. **What is the aspiration efficiency of the Environmental Enclosure?**

Please refer to TSI Application Note ITI-060 *Inlet Aspiration Efficiency of the DUSTTRAK™ Environmental Enclosure Model 8520-1*.

---

9. **Can I substitute different tubing to connect the Enclosure's aerosol inlet to the DUSTTRAK inlet?**
Using alternate tubing is not recommended. The tubing provided with the Enclosure is special electrically conductive tubing designed to minimize particle transport losses. Use of tubing made from other materials may result in low readings. The Environmental Enclosure Accessory Kit (P/N 801566) includes a replacement tube along with other components.

---

10. **Can the Environmental Enclosure perform PM10, PM2.5, or PM1.0 sampling?**
Yes. The external inlet will effectively sample particles up to 10 microns. Your choice of DUSTTRAK inlet (impactor) will determine which PM sample is taken.

---

11. **What kind of tripod do I need to mount the Enclosure?**

Any style of sturdy industrial tripod will work as long as it utilizes a connector with a 5/8 inch x 11 thread (flat). This type of tripod is often used for surveying instruments. One possible vendor is.

Sokkia Measuring Systems

Look on their web site at http://www.sokkia.com for the nearest distributor.

Although tripod mounting the Environmental Enclosure is recommended for most applications, other mounting options are acceptable. Mounting on a pole/rail/table/etc. will work suitably.

---

12. **What happens if the battery becomes fully discharged while sampling?**
When the voltage of the external battery pack reaches 5.1 volts or less, the battery pack will automatically shut off. If the DUSTTRAK does not have an auxiliary power source (internal C-cell size batteries), it will turn off and the sample will be terminated. All data stored in the internal memory will be left intact due to the DUSTTRAK's internal lithium battery back-up feature.

---

13. **How high should I have my Enclosure off the ground when sampling?**
The Enclosure should be kept a reasonable distance off the ground to prevent any major air flow disturbances caused by the ground from affecting the sample obtained. TSI recommends mounting the Environmental Enclosure 3 to 4 feet off the ground.

---

14. **How long can I run the DUSTTRAK on the external battery pack without charging it?**
A fully charged battery will run for up to 60 hours under ideal conditions. The battery pack has an automatic voltage cut-off which prevents the battery from becoming deeply discharged. To prolong the life of your battery, you should recharge it every 24 hours.

---

15. **Can I use an AC power source to run the DUSTTRAK inside the Enclosure?**
There are currently no options available from TSI for using an AC adapter along with the Environmental Enclosure. The DUSTTRAK AC adapter (P/N 2613033) is not rated for outdoor use.

---

16. **Will running the flow through the additional aerosol inlet (impactor) change the flow rate to the DUSTTRAK?**
No. The pressure drop is minimal through the omnidirectional aerosol inlet on the Environmental Enclosure and causes no change in the volume of air that the DUSTTRAK is sampling. Be sure to set the DUSTTRAK flow rate to 1.7 L/min before installing it in the enclosure. The sampling inlet on the Enclosure is specifically designed for a flow rate of 1.7 L/min.

---

17. **Can I turn the DUSTTRAK On/Off without opening the Enclosure through the RS-232 port in the Enclosure?**
Although the DUSTTRAK will respond to remote queries through the RS-232 port, it cannot be switched On/Off remotely. The instrument can, however, be set to record data a predetermined times through the Log 2 or Log 3 modes. Refer to the DUSTTRAK Operation and Service manual for information on how to do this.

Top

TSI Incorporated Copyright 2007 TSI Incorporated. All rights reserved.

TSI Incorporated
500 Cardigan Road, Shoreview, MN 55126 U.S.A.
E-mail: info@tsi.com
Telephone: +1 651-490-2811
Toll Free: 1-800-874-2811
Fax: +1 651-490-3824

Terms and Conditions | Privacy Policy | Copyright | WEEE and RoHS Directive | Contact Us
TSI Suppliers-Purchase Order Terms and Conditions | TSI Sales Terms and Conditions

Innovative Measurement Solutions

DUSTTRAK™ Environmental Enclosure

Model 8520-1

Product Information

The DUSTTRAK™ has a Environmental Enclosure accessory for use outdoors and in harsh environments.

The weatherproof Environmental Enclosure protects the DUSTTRAK™ Aerosol Monitor when used outdoors and in harsh industrial environments. Primarily used in outdoor settings, the wind- and rain-proof enclosure features an extended-life battery for long-term unattended sampling.

The Environmental Enclosure comes with an omni-directional sampling inlet specifically designed to sample efficiently in a broad range of wind conditions. The inlet on the enclosure samples most efficiently from 0 to 22 mph.

The high-capacity battery included with the the enclosure permits continuous, 24-hour operation. Two high-capacity batteries are included with the enclosure, allowing one battery to be charged while the other is in operation.

The enclosure can be mounted to a standard surveyor tripod (using a 5/8" thread).

Features and Benefits

- Omni-directional sampling inlet
- Efficient sampling in a broad range of wind conditions (up to 22 mph)
- Extended-life battery for continuous 24-hour monitoring
- Protection from wind and rain
- Field portable
- Enclosure provides additional protection and security to the instrument

Applications

- Environmental site perimeter monitoring
- Fugitive dust emissions
- Construction site monitoring
- Urban pollution monitoring
- Dust control
- Harsh industrial environments

Included Items

- Environmental enclosure
- Battery charger
- Water trap, sample tubing and O-rings

News

Update Your PIV system – At a Very Attractive Price! More

V3V™ Captures 3D Vortex Shedding from a Sphere More

Have Questions?

Contact TSI Sales at 1-800-874-2811 or +1-651-490-2811 from 8 a.m. to 4 p.m. (CST), Monday through Friday or email answers@tsi.com.

- Two high-capacity battery packs

TSI Incorporated Copyright 2007 TSI Incorporated. All rights reserved.

TSI Incorporated
500 Cardigan Road, Shoreview, MN 55126 U.S.A.
E-mail: info@tsi.com
Telephone: +1 651-490-2811
Toll Free: 1-800-874-2811
Fax: +1 651-490-3824

Terms and Conditions | Privacy Policy | Copyright | WEEE and RoHS Directive | Contact Us
TSI Suppliers Purchase Order Terms and Conditions | TSI Sales Terms and Conditions

APPENDIX D

Real-time Air Monitoring Form

Advanced GeoServices Corp.
1055 Andrew Drive, Suite A 610-840-9100 (FAX) 610-840-9199
West Chester, PA 19380-4293

REAL TIME AIR MONITORING RESULTS

Project Name: _____ AGC Technician: _____

Date: _____ Wind Direction (start of day): _____

Weather Conditions: _____ Wind Direction (noon): _____

Work Area Type (circle one): Excavation Backfill

Description of Activities in Work Area: _____

Pipe Segment: _____

Monitor Location (circle one): Enclosure Entrance Opposite End

Monitor Number: _____

Monitor Location Sketch: (provide north arrow, Work Area, fences,distances to property line)

Time Interval	Actual Time	Reading (μg/m^3)	Performance Standard (μg/m3)	Is reading less than standard (circle yes or no)?
0700 to 0800				YES NO
0800 to 0900				YES NO
0900 to 1000				YES NO
1000 to 1100				YES NO
1100 to 1200				YES NO
1200 to 1300				YES NO
1300 to 1400				YES NO
1400 to 1500				YES NO
1500 to 1600				YES NO
1600 to 1700				YES NO
1700 to 1800				YES NO
1800 to 1900				YES NO
1900 to 2000				YES NO

APPENDIX E

Sampling and Analysis Plan

SAMPLING AND ANALYSIS PLAN
EXIDE TECHNOLOGIES
VERNON, CALIFORNIA

Prepared For:

EXIDE TECHNOLOGIES
Vernon, California

Prepared By:

ADVANCED GEOSERVICES
West Chester, Pennsylvania

Project No. 2013-3007-01
May 24, 2013
Revised July 12, 2013
Revised August 5, 2013

SAMPLING AND ANALYSIS PLAN
EXIDE TECHNOLOGIES
VERNON, CALIFORNIA

Prepared For:

EXIDE TECHNOLOGIES
Vernon, California

Prepared By:

ADVANCED GEOSERVICES
West Chester, Pennsylvania

Project No. 2013-3007-01
May 24, 2013
Revised July 12, 2013
Revised August 5, 2013

Paul G. Stratman, P.E.
Senior Project Consultant
California P.E. No. C61595

TABLE OF CONTENTS

PAGE NO.

1.0 Introduction 1-1

2.0 Facility Background 2-1

2.1 Site Location 2-1
2.2 Site Description 2-1
2.3 Operational History 2-2

3.0 Project Data Quality Objectives 3-1

3.1 Project Definition 3-1
3.2 Data Quality Objectives 3-3

3.2.1 Problem Statement 3-3
3.2.2 Study Questions (SQ) 3-4
3.2.3 Data Inputs (DI) 3-4
3.2.4 Study Boundaries 3-5
3.2.5 Decision Rules 3-6
3.2.6 Acceptance Criteria for Data 3-7

3.3 Data Quality Indicators 3-7

3.3.1 Precision 3-8
3.3.2 Accuracy 3-8
3.3.3 Representativeness 3-9
3.3.4 Completeness 3-9
3.3.5 Comparability 3-9

3.4 Data Validation and Usability 3-10

3.4.1 Data Review, Validation, and Verification Requirements 3-10

3.4.1.1 Verification and Validation Methods 3-10

3.4.2 Reconciliation with Data Quality Objectives 3-12
3.4.3 Documentation and Records 3-12

3.5 Data Management 3-13

3.5.1 Document Collection and Organization 3-14
3.5.2 File Preservation 3-14

TABLE OF CONTENTS
(Continued)

PAGE NO.

3.6 Assessment/Oversight 3-15

3.6.1 Corrective Action 3-16

3.6.1.1 Corrective Action Resulting from Routine Activities 3-17
3.6.1.2 Corrective Action Resulting from QA Audits 3-17

3.6.2 Quality Assurance Reports to Management 3-17

4.0 Sampling Rationale 4-1

4.1 Pre-Removal Sampling 4-1
4.2 Characterization of Soil/Sediments Within the Removed Pipes 4-3
4.3 Post Removal Soil Sampling 4-3
4.4 Characterization Sampling for Disposal Purposes 4-6

5.0 Request for Analyses 5-1

5.1 Analysis Narrative 5-1

5.1.1 Soil Sample Analysis for Pre-Removal Investigation 5-1
5.1.2 Soil Sample Analysis for Post-Removal Sampling 5-2
5.1.3 Waste Characterization Sampling 5-2

5.2 Analytical Laboratory 5-3
5.3 XRF Analysis of Representative Soils/Fill Materials 5-3

6.0 Field Methods and Procedures 6-1

6.1 Field Equipment 6-1

6.1.1 X-ray Fluorescence Analyzer 6-1
6.1.2 Photoionization Detector 6-1
6.1.3 Geiger Counter 6-2

6.2 Field Testing 6-2

6.2.1 XRF Screening 6-2
6.2.2 Photoionization Detector for VOC Field Screening of Soil Samples 6-3
6.2.3 Soil Sample Geiger Counter Field Screening 6-3

TABLE OF CONTENTS
(Continued)

PAGE NO.

6.3 Soil Borings 6-3

6.3.1 Boring Location Preparation 6-4

6.4 Soil Sampling 6-5
6.5 Boring Abandonment 6-5
6.6 Decontamination Procedures 6-6

7.0 Sample Containers Preservations and Storage 7-1

7.1 Soil Samples 7-1

8.0 Disposal of Residual Material 8-1

9.0 Sample Documentation and Shipment 9-1

9.1 Field Notes 9-1
9.2 Sample Labels 9-2
9.3 Chain of Custody 9-3
9.4 Sample Packaging and Shipment 9-3

9.4.1 Laboratory Custody Procedures 9-4
9.4.2 Sample Storage and Disposal 9-5

10.0 Quality Control 10-1

10.1 Field Quality Control Samples 10-1

10.1.1 Field Duplicate Samples 10-1
10.1.2 Equipment Decontamination Blanks 10-1
10.1.3 Field Blanks 10-2

10.2 Laboratory Quality Control Samples 10-2

10.2.1 Method Blank/Reagent Blank 10-3

10.2.1.1 Calibration Standards (Initial Calibration) 10-3
10.2.1.2 Check Standard (Continuing/Daily Calibration) 10-4

10.2.2 Laboratory Duplicates 10-4
10.2.3 Laboratory Control Sample (LCS) 10-5

TABLE OF CONTENTS
(Continued)

PAGE NO.

10.2.4 Matrix Spike and Matrix Spike Duplicate (MS/MSD) 10-5
10.2.5 Surrogate Spikes 10-6

11.0 Field Variance 11-1

12.0 References 12-1

LIST OF TABLES

TABLE

3-1 Summary of Laboratory Methods and Quality Assurance Goals
7-1 Sample Preservation, Holding Times, and Container Requirements
10-1 QA/QC Sample Summary

LIST OF FIGURES

FIGURE

1-1 Project Organization Chart
2-1 Facility Location Map
2-2 General Site Layout

LIST OF PLATES

PLATE

1 Boring Location Plan

LIST OF ATTACHMENTS

ATTACHMENTS

A USEPA Method 6200
B Calsciences' Quality Assurance Manual
C Sample Identification Forms
D Geiger Counter Standard Operating Procedure

1.0 INTRODUCTION

This Sampling and Analysis Plan (SAP) has been prepared to document the objectives, rationale, and procedures for environmentally-related measurements performed as part of the Emergency Response Interim Measures Work Plan (ERIMWP) for Stormwater Management System Removal at the Exide Technologies (Exide) facility located at 2700 South Indiana Street in Vernon, California (the site). This SAP has been prepared by Advanced GeoServices Corp. (Advanced GeoServices) on behalf of Exide to comply with the requirements of the Corrective Action Consent Order (Docket No. P3-01/02-010) (Consent Order) between the California Environmental Protection Agency (Cal/EPA) Department of Toxic Substances Control (DTSC) and Exide. Activities associated with this SAP include soil sampling to determine the extent of soils with lead concentrations above the California Human Health Screening Level (CHHSL) for lead in industrial soil standard of 320 mg/kg, quantify concentrations of site Constituents of Potential Concern (COPCs) in soil, and to characterize materials for disposal purposes. Testing of soil samples for additional parameters may be conducted as necessary based on field observations. The purpose of this SAP is threefold:

- Implement standardized field methods that will be used to collect the soil samples;
- Identify the anticipated chemical parameters that may be analyzed; and,
- Identify laboratory and field methods that will be used for sample analysis.

Figure 1-1 shows the project organization chart that identifies individuals and entities responsible for completing the objectives and procedures detailed in this SAP. Key project personnel and project responsibilities are summarized below:

Exide Project Manager: Overall responsibility and authority for project coordination among the consultants, Exide, and regulatory agencies.

Project Manager: Responsible for project coordination between Exide, Advanced GeoServices, and regulatory agencies. Responsibilities include overall project quality, technical oversight, schedule and budget management, and report preparation. The Project Manager will be responsible to ensure all project personnel and contractors are qualified and adequately trained to perform the work to which they are assigned. Documentation from contractors may be requested by the Project Manager prior to their starting work. The Project Manager is responsible to ensure all documentation is appropriately filed and maintained.

Project Quality Assurance (QA) Officer: Responsible for ongoing review, monitoring, auditing, and evaluation of the field and laboratory QA/QC program. The QA Officer is also responsible for development and supervision of QA/QC procedures for data management and analysis, and report preparation and review.

Field Operations Manager: Responsible for the maintenance and calibration of field equipment, including the x-ray fluorescence analyzer (XRF), photoionization detector (PID) and Geiger counter. All field personnel will have completed current 40-hour OSHA and 8-hour refresher requirements and respiratory training and fit test. The proposed XRF (Niton XL3t GOLDD+) utilizes a 50kV (max) gold anode X-ray tube. Based on conversations with the manufacturer (Niton), because the unit utilizes X-ray tubes versus sealed radioactive source material, the XRF does not require a Radioactive Materials License issued by the Radiological Health Branch of the California Department of Health Services (DHS). We have been attempting to contact the X-ray Tube Department of the DHS to confirm that no other registration or specific training is required. The Field Operations Manager will be responsible for ensuring that field equipment and screening are utilized in accordance with the procedures and operating instructions provided in SAP Attachments A (XRF Method 6200), and D (Geiger counter).

Field personnel will be briefed on site-specific technical and quality issues and procedures as related to their duties. Examples include project objectives and quality requirements, chain-of-custody requirements, sampling and shipping protocols, and project safety. Personnel training will be periodically reviewed by the Project Manager to ensure the training is appropriate, adequate, and current. Personnel who have allowed their training to expire will not be allowed to work until training is updated.

QA/QC problems or deficiencies, if any, identified by the Project QA Officer during the review, monitoring, and auditing process will be brought to the attention of the Project Manager, as appropriate. If QA/QC problems or deficiencies require corrective action, such action will be recommended by the Project Manager and/or the Project QA Officer and the Exide Project Manager.

This SAP is Appendix E to the ERIMWP and is organized into the following sections: Section 1.0 is the Introduction. Section 2.0 presents background information pertaining to the site's location, facility operations and physiographic setting. Section 3.0 is the Project Data Quality Objectives which will be used to monitor and control data quality. Section 4.0 is the Sampling Rationale, which presents the rationale for the individual tasks and detailed procedures for sampling and data gathering. Section 5.0 is the Request for Analysis and Section 6.0 is Field Methods and Procedures. Sections 7.0, 8.0 and 9.0 are for Sample Containers, Management of Investigation Derived Waste and Sample Documentation and Shipping, respectively. Section 10.0 is Quality Control and Section 11.0 is Field Variances. The Health and Safety Plan for the sampling activities is provided as Appendix B of the Comprehensive RFI Work Plan (Advanced GeoServices, 2013). The SAP is supported by a list of references, tables, figures, and attachments, all of which follow the text.

2.0 FACILITY BACKGROUND

This section summarizes background information including site description and the site history. Additional details regarding site history, environmental setting, site geology and hydrogeology and the degree and extent of contamination identified during previous investigations have been presented in the Revised Current Conditions Report (Advanced GeoServices, 2012). Information relating to the removal action (interim measures) being undertaken on the stormwater system may be found in the ERIMWP.

2.1 SITE LOCATION

The Exide facility is located at 2700 South Indiana Street in Vernon, California as shown on Figure 2-1. The property occupies a total area of approximately 15 acres, which is bounded by 26th Street towards the north and Bandini Avenue towards the south. A 1.5 +/- acre parcel, with approximately 190 -ft of frontage along the north side of Bandini Boulevard and 345 ft of frontage along the east side of Indiana Street, is occupied by the Main Office Building. The remaining 13.5 +/- acres, extends along the west side of Indiana Street between Bandini Avenue and 26th Street (a distance of approximately 900 ft) and includes the active manufacturing areas. The 13.5-acre parcel has approximately 1000 ft of frontage along Bandini Boulevard and 450 ft of frontage along 26th Street. A concrete lined flood channel bisects the Site in a north-south direction and a railroad right of way intersects the Site in an east-west direction, as shown on Figure 2-2. Coordinates for the Site are 34º 00'22" north latitude and 118º 11' 48" west longitude. The Site is located approximately 1 mile west of the Long Beach Freeway (I-710).

2.2 SITE DESCRIPTION

The Site is characteristic of the heavy industrial nature of the facility and surrounding land uses. Pavement, buildings and structures cover nearly the entire facility, with the only exceptions being a small grass area near the main office, a few small isolated areas of landscaping or exposed soil. The Site is relatively flat with an average elevation of 175 to 180 feet above sea

level and topography that generally slopes from the northwest to the southeast. Notable landmarks include the main office (east of Indiana Street), the existing smelter building (near the intersection of Indiana Street and 26th Street) and the lined impoundment north of Bandini Boulevard.

2.3 OPERATIONAL HISTORY

In 1922, Morris P. Kirk & Sons, Inc. initiated lead smelting and metals processing operations at the Site. They continued operation until 1973 when NL Industries took control of the operation. In 1979, Gould Inc. took control of the facility and maintained operations until 1984. In 1984, GNB Technologies bought the facility from Gould. In September 2000, Exide Technologies acquired GNB, including the Vernon facility.

Site operations from 1922 through 1973 included a battery breaking process for the purpose of recovering lead from lead-acid batteries, production of lead sheeting, the production of zinc alloys and the manufacturing of extruded metal components. Discussions of the location of these operations are provided in the Revised Current Conditions Report (Advanced GeoServices, 2012).

In 1982 the facility was the subject of a major modernization and reconstruction project that resulted in construction of the main smelter and battery breaking operations. The lined storm water retention basin was constructed in 1984.

Prior to 1922 the Site was reportedly the "boneyard" for a meat rendering plant and before that, the Site west of Indiana Street and additional areas towards the west, were quarried for gravel.

3.0 PROJECT DATA QUALITY OBJECTIVES

3.1 PROJECT DEFINITION

The objective of this SAP is to generate sufficient data during pre-removal soil borings and post-removal soil sampling to determine the extent of soils/fill material with total lead concentrations above 320 mg/kg surrounding the stormwater system pipes and structures (the "Surrounding Soils"). Such soils will be excavated during the removal of the existing stormwater pipes and structures to a limit of no less than 1.5 feet beyond the outside walls of the pipe and structures and to the invert of the existing pipes and structures. Surrounding Soils shall be extended up to10 feet below the ground surface to remove soils with total lead > 320 mg/kg when such concentrations are the result of impacts from the existing stormwater system. Any soils with a lead concentration above 320 mg/kg remaining outside those limits or impacts by other constituents will be evaluated as part of the RCRA Facility Investigation (RFI).

Approximately 168 soil borings will be completed as part of the pre-removal soil borings and will produce over 700 soil samples (excluding QA/QC samples). Forty-two (42) samples of the subbase material (25% of 168), and 168 soil samples each at the crown of the pipe, invert of the pipe, 1 to 2 feet below the invert of the pipe and from 9 to 10 feet below grade). Post-removal soil screening and analysis will consist of approximately 500 in-situ direct-read measurements for total lead, approximately 120 hand auger or driven subsoil sample borings and the collection of approximately 240 ex-situ soil samples (excluding QA/QC samples).

Soil lead content will be screened using a portable XRF unit following USEPA Method 6200 (Attachment A) for ex-situ soil samples (pre-and post-excavation samples) or direct read for in-situ soils (post-excavation/bottom of excavation). Information regarding antimony, arsenic, cadmium, copper and zinc concentrations will also be obtained from the ex-situ samples using the XRF during the post-removal sampling.

Approximately 10% of the ex-situ soil samples (pre and post removal) for each type of material screened with the XRF using USEPA Method 6200 will be submitted for laboratory analysis of CAM-17 metals and aluminum after completion of XRF screening. The results will be utilized to develop a correlation between the XRF and the laboratory. Samples submitted for laboratory analysis for CAM-17 metals and aluminum will also be analyzed for moisture content, pH and sulfate.

Screening for organics will be conducted with a photo-ionization detector (PID) at the time of soil sampling. Soil samples with PID readings >10ppm above background will be selected for VOC, PAH and TPH analysis. Those samples exhibiting staining or odor, will also be sent for VOC, PAH and TPH analysis.

Five samples from the North Yard, five samples from the South Yard, and three samples from the West Yard will be collected from the 0-12 inch interval beneath the pipe invert for dioxin/furan analysis.

Pre-removal soil borings completed along the west side of the RMPS building (between existing manholes MH-2 and MH-7) will be situated within or near an area identified in the RCRA Facility Assessment as the North Yard Radiation Area (SWMU A-20). Based on available information a sealed Cobalt 60 source was used in this area between 1962 and 1980 for quality control testing of lead shielding produced on-site and it is believed that the testing equipment (including the source) were returned to the equipment manufacturer when testing was discontinued. However, because no documentation could be found to prove the equipment containing the sealed source had been returned to its manufacturer when the former facility owner terminated its use, DTSC has requested that soil samples from this area be screened to confirm that the source was not abandoned in this area when testing of lead shielding ceased. In response, Exide has agreed to screen soil samples and the excavation bottom and sidewalls for gamma radiation relative to Site background levels using a Geiger counter (Ludlum Model 19). In the event the screening identifies gamma radiation above background and above the unrestricted public exposure level of 11.4 μR/hr (10 CFR 20.1301) DTSC and the Contractor's

Health and Safety Officer will be notified, frequency of screening increased to refine limits of area exceeding background, and spoils from the area will be segregated and managed separately from materials at or below background levels. If screening identifies gamma radiation at or above the occupational exposure level of 570 µR/hr (10 CFR 20.1201) DTSC and the Contractor's Health and Safety Officer will be notified and the area will be cordoned off and excluded from further excavation until additional investigation can be conducted under the direction of a American Board of Health Physics (ABHP) Certified Health Physicist.

Procedures for sampling and other data gathering activities are presented in the following sections. The sample collection and analysis procedures will be conducted in accordance with the site-specific Health and Safety Plan (HASP) presented as Appendix B of the Comprehensive RFI Work Plan. The Contractor performing stormwater system removal and replacement activites will develop and implement their own HASP appropriate for the selected means and methods. The Contractor's HASP must meet the minimum standards presented in Specification Section 01545 of the Replacement Plan.

3.2 DATA QUALITY OBJECTIVES

3.2.1 Problem Statement

Collect data to characterize soil along the alignment of the existing stormwater management system for the purpose of segregating and managing excavation spoils, and defining Interim Measures for Surrounding Soils (soils with total lead concentrations >320 mg/kg within 1.5 feet laterally of the existing piping and structures, up to 10 feet bgs) that may have been impacted from water and sediment leaking from the piping system. Screen and analyze soils remaining in-place for Site COCs (CAM 17 metals plus aluminum (6010B)), VOCs (8260B), PAHs (8270C)) and TPH (DRO/GRO/ORO)(8015B). Field screen soil samples west of RMPS building between MH-2 and MH-7 for gamma radiation.

3.2.2 Study Questions (SQ)

SQ-1 Subsurface Materials: What types of materials were used for bedding, backfill and cover during construction of the existing stormwater system and does a relationship exist between total lead concentration and material types?

SQ-2: Material Characterization: Which excavation spoils and pavement materials can be retained on-site and utilized as backfill for the Replacement Stormwater System and which spoils will require handling and off-site disposal?

SQ-3 Inorganic Impacts from Stormwater System: Has leakage occurred from the existing stormwater system that has raised lead concentrations in the bedding and subbase soil to 320 mg/kg or greater and are other inorganic contaminant concentrations in the bedding and backfill above their respective screening values (Sb = 380 mg/kg, As = 12 mg/kg, Cd = 7.5 mg/kg, Cu = 38,000 mg/kg, and Zn = 100,000 mg/kg)?

SQ-4 Organic Impacts from Storwmater System: Do excavation spoils or bedding materials for existing pipes/structures exhibit physical signs (staining or odor) or PID screening results for organics contamination >10 ppm total VOCs above background, and are laboratory analysis required to support Corrective Action Process?

SQ-5 Radiation Screening: Are shallow subsurface soils west of RMPS emitting gamma radiation at levels greater than background?

3.2.3 Data Inputs (DI)

DI-1 Subsurface Materials: Stratigraphic information, material descriptions, XRF screening results and analytical data along the alignment of the existing stormwater system.

DI-2: Material Characterization for Off-Site Disposal: Total threshold limit concentrations (TTLC) for Title 22 CAM-17 metals plus aluminum (EPA Method 6010B), total volatiles (EPA Method 8260B), Poly-Aromatic Hydrocarbons (PAHs) (EPA Method 8270C) and TPH Extractable (DRO/GRO/ORO)(8015B) for representative soil and pavement samples.

DI-3 Inorganic Impacts from Stormwater System: XRF screening results using a combination of direct readings for total lead, and ex-situ samples for USEPA Method 6200 (Sb, As, CD, CU, Pb and Zn) and approximately 10% laboratory confirmation sampling (Title 22 CAM-17 metals plus aluminum (EPA Method 6010B)) in soils samples at incremental depths beneath the invert of the existing pipes and structures.

DI-4 Organic Impacts from Storwmater System: Visual evaluation of bedding material for existing pipes/structures for indications of odors, staining or free product and field screening of soil samples with a PID for elevated organic readings above background following removal of pipes and structures. Laboratory analysis of those samples exhibiting the most pronounced physical indications and highest screening results for total VOC (EPA Method 8260B), Poly-Aromatic Hydrocarbons (PAHs) (EPA Method 8270C) and TPH Extractable (DRO/GRO/ORO)(8015B).

DI-5 Radiation Screening: Develop material specific background levels for gamma radiation in backfill, bedding and subbsoils in South Yard and location specific measurements for backfill, bedding and subbsoils in North Yard west of RMPS between MH-2 and MH-7.

3.2.4 Study Boundaries

Study boundaries are limited to 1.5 feet on either side of the existing stormwater piping and structures and the vertical limit is up to 10 feet bgs. Investigation beyond these limits will be the focus of the ongoing RFI.

Screening for gamma radiation is limited to shallow (<10 feet bgs) soil samples from areas west of RMPS.

3.2.5 Decision Rules

DR-1 Subsurface Materials: Compare screening and analytical results from pre-removal borings for subsoils (up to 10 ft bgs), bedding, backfill and cover material against the 320 mg/kg CHHSL value and then designate materials >320 lead for excavation and off-site disposal.

DR-2 Material Characterization: If other screening (XRF screening for metals besides lead) and analytical data (CAM-22 Metals (6010B), Aluminum, VOCs (8260B), PAHs (8270C)) and TPH Extractable (DRO/GRO/ORO)(8015B) for excavated materials (including concrete pavement) with lead < 320 mg/kg are less than their corresponding commercial/industrial CHHSL values, site specific background value (arsenic), or EPA non-residential RSL (when a CHHSL does not exist) then such excavated materials may remain onsite for use as backfill during construction of the Replacement Stormwater System. If excavated materials destined for off-site disposal have total concentrations below their corresponding TTLC values and leachable concentrations below their corresponding SPLC/TCLP values then send for non-hazardous disposal; otherwise send for hazardous off-site disposal and/or treatment and disposal.

DR-3 Inorganic Impacts from Stormwater System: If lead concentrations for post-removal soil samples from bedding and subbase soil are >320 mg/kg and unrelated to slag or other area wide impacts, then remove additional soil until remaining soil lead concentrations are <320 mg/kg or excavation has reached 10 feet bgs.

DR-4 Organic Impacts from Stormwater System : If bedding and subsoils beneath pipes and structures exhibit staining, odor or PID screening levels >10 ppm above background, collect additional samples for VOC and PAH and TPH Extractable (DRO/GRO/ORO) analysis for use during subsequent RFI activities and then proceed with installation of the Replacement Stormwater Management System. If product is observed in pores of bedding and subsoil

materials, remove such materials to maximum removal depth of 10 feet before proceeding with Replacement Stormwater Management System installation.

DR-5 Radiation Screening: If results of radiation screening identify gamma levels above background in the area west of RMPS then more detailed investigation/evalaution may be necessary. Exide shall verbally notify DTSC immediately if results >517 µR/hr (equivalent to NRC allowable workplace exposure level of 5R/yr (10CFR20.1201)). Exide shall verbally notifiy DTSC within 24 hours if results >11.4 µR/hr (equivalent to NRC allowable unrestricted public exposure level of 0.1R/yr (10CFR20.1301)).

3.2.6 Acceptance Criteria for Data

Laboratory data will be evaluated for the Data Quality Indicators described in Section 3.3 and subject to the Data Validation and Usability evaluation described in Section 3.4.

XRF field screening data will be evaluated following the procedures described in USEPA Method 6200 (Attachment A). PID and Geiger counter data shall be deemed acceptable when equipment has been calibrated and operated in accordance with the equipment manufacturers operating manual.

3.3 DATA QUALITY INDICATORS

The data collected must be accurate, precise, and complete. The evaluation of the data must involve an assessment of representativeness of site conditions and comparability to previously collected data. The definitions for accuracy, precision, completeness, comparability, and representativeness are defined in the following sections.

Table 3-1 presents levels for accuracy and precision established for the results of chemical analyses of both field and laboratory QC samples.

3.3.1 Precision

Precision is the mutual agreement among individual measurements of the same property, usually under prescribed similar conditions. Precision will be determined with analysis of matrix spike duplicates and field duplicates or in the case of the XRF, by taking multiple readings on the same sample. Precision is measured with the Relative Percent Difference (RPD) between the original sample result and the duplicate sample result using the following calculation:

$$\text{Precision} = \text{RPD} = \frac{\left| \text{difference between the original and duplicate result} \right|}{\text{average of the original and duplicate result}} \times 100$$

RPDs will not be calculated in cases where one analyte of the duplicate pair was not detected.

3.3.2 Accuracy

Accuracy measures the bias in a measurement system. Sources of error are the sampling process, field contamination, preservation, handling, sample matrix, sample preparation and analysis techniques. Sampling accuracy may be assessed by evaluating the results of field blanks (trip blanks, equipment blanks, decon water source blanks) to assess if contamination was introduced during the field activity. Laboratory blanks will be analyzed to determine if contamination was introduced in the laboratory. Matrix spikes will be conducted and analyzed to assess the analytical accuracy. For spiked samples, accuracy is measured as percent recovery (%R) of the spike added using the following calculation:

$$Accuracy = \%R = \frac{(spiked\ sample\ result - sample\ result\ without\ the\ spike}{amount\ of\ spike\ added} \times 100$$

With the XRF, accuracy is measured by taking a second reading of the sample without moving the instrument and comparing the results.

3.3.3 Representativeness

Representativeness expresses the degree to which sample data accurately and precisely represents a characteristic of a population, parameter variations at a sampling point, or an environmental condition. Representativeness is a qualitative parameter, which is most concerned with the proper design of the sampling program. The representativeness of the data will be maintained by following appropriate and consistent procedures for the geoprobe, sample collection and homogenization, soil/fill classification, and by the application of approved, standard analytical methods. Field QA/QC samples will be used to provide information on the representativeness of the field sampling effort.

3.3.4 Completeness

Completeness is the amount of valid data obtained from a measurement system compared to the amount that was expected to meet the project data goals. A goal of 90 percent completeness has been established for the project chemical data. However, the required level of completeness will vary with the data quality needs of different aspects of the site characterization. In the event that all expected data are not available or suitable to support an aspect of the site characterization, the available data will be specifically assessed for adequacy, or if additional data should be acquired. Measurement completeness (C) can be described as the ratio of acceptable measurements obtained for the total number of planned measurements for an activity. For this extended meaning, completeness is defined as:

$$Completeness = \frac{number\ of\ acceptable\ items}{total\ number\ of\ planned\ items} \times 100$$

3.3.5 Comparability

Comparability expresses the confidence with which one data set can be compared to another. Sample data should be comparable with other measurement data for similar samples and sample

conditions. This goal is achieved through using standard techniques to collect and analyze representative samples and reporting analytical results in appropriate units.

3.4 DATA VALIDATION AND USABILITY

The following sections address the QA activities that occur after the data collection phase of the project is completed. Implementation of these elements determines whether the data conform to the specified criteria, thus satisfying the project objectives.

3.4.1 Data Review, Validation, and Verification Requirements

The first level of review and consequent data validation and verification reporting is done at the laboratory or in the field for the XRF testing. Data reduction, validation, and reporting at the laboratory will be implemented in accordance with standard EPA methods for analytical and QA protocols. Refer to the laboratory's QA Manual in Attachment B and to the USEPA Method 6200 in Attachment A for QA/QC procedures for the XRF. The data are reduced and validated by the laboratory in accordance with individual analytic methodology, quality control procedures, and the use of appropriate standards and correct transcription.

The second level of data review is conducted by Advanced GeoServices personnel in the office. All data packages are reviewed for precision, accuracy, representativeness, completeness and comparability. If any issues or inconsistencies are encountered, they are investigated and corrective action is implemented, if necessary.

3.4.1.1 **Verification and Validation Methods**

Verification concerns the process of examining a result of a given activity to determine conformance to the stated requirements for that activity. Validation concerns the process of examining a product or result to determine conformance to user needs.

Data Verification

Verification will consist of reviewing data packages for completeness and consistency to confirm that QC parameter values fall within acceptable limits and to identify any samples that require data qualification.

Data Validation

Validation is the process of evaluating the available data against the project Data Quality Indicators (Section 3.2) to make sure that the objectives are achieved. The available data reviewed will include analytical results, field QC data and lab QC data, and may include field records. As defined in SW-846, data validation may be very rigorous or cursory, depending on project DQOs. For this project, data validation will be cursory with rigorous validation taking place in the RFI.

All analytical data, upon arrival from the laboratory, will receive an initial QA check by a qualified Advanced GeoServices QA Scientist. This QA check will include verification of receipt of all samples, verification that all sample analyses were performed and a scan for extreme values in the results reported. As part of the RFI, a more comprehensive review will be conducted. The information examined during this data review process will consist of, but not be limited to: chain-of-custody completeness; holding time limitations; blank contamination; instrument initial and continuing calibration; matrix spike/matrix spike duplicate accuracy; laboratory and field duplicate precision internal standards, serial dilutions; and overall system performance. The data review also verifies proper quality assurance/quality control samples were collected and analyzed. A validation report will be completed as part of the RFI indicating any problems associated with the sample analyses.

3.4.2 Reconciliation with Data Quality Objectives

When the data validation indicates that a control parameter is not within limits specified in this SAP, the impact of the outlier on the usability of the associated data will be assessed. Based on the results of the data validation, qualifiers will be applied to analytical data to indicate the usability of the data. When the reviewed data do not meet quality control requirements specified in this document the data will be flagged with qualifiers. Commonly used qualifiers include:

- J – The analyte was positively identified and detected; however, the concentration is an estimated value because the result is less than the detection limit or quality control criteria were not met.

- R - Reject, unusable. The data are qualitatively and quantitatively unacceptable.

- U – The analyte was not detected at the given detection limit.

- No qualifier - Data are acceptable for use as reported.

3.4.3 Documentation and Records

Upon successful completion of the data validation process and assessment of usability of the data, new data generated for the project will be entered/loaded into the project database. Copies of all analytical data and/or final reports are retained in the laboratory files and, at the discretion of the laboratory manager. Subsequent to completion of the project, the files will be transferred to data archives. Data may be retrieved from archives upon request. Exide will be ultimately responsible for record retention on completion of the ERIMWP, as described in the Consent Order. Advanced GeoServices' current contract with Exide includes maintaining the ERIMWP records on Exide's behalf.

All reports generated during the ERIMWP will be provided to DTSC in both paper and electronic formats. These submittals, to the extent applicable, could include the following:

- Presentation of analytical results
- Results of XRF testing
- Result of gamma radiation screening
- Comparison of XRF results and laboratory confirmatory testing
- Lithologic description logs
- Results of field screening efforts during pipe removal
- Results of waste characterization for disposal purposes

Raw data from field measurements and other sample collection activities will be appended to the reports, as appropriate. Where field data have been reduced or summarized, the method of reduction will be documented in the reports. All documents will be kept for a minimum of six years from termination of the Consent Order.

3.5 DATA MANAGEMENT

The document control system (DCS) for the project is designed to meet the following objectives:

- Establish and maintain a repository for project documents and data.
- Establish an inventory of documents contained in the DCS.
- Facilitate efficient retrieval of information.

The content and organization of the DCS are discussed below, along with a description of the file indexing method, a computer-based document inventory system, and a discussion of document preservation.

3.5.1 Document Collection and Organization

All records, documents, and other information relating to the project will be located in Advanced GeoServices' West Chester office and will be preserved as physical or electronic documents, or both. Those preserved as physical documents will be kept in file cabinets in a secure office setting. Alternatively, documents may be converted to electronic format. Specifically, portable document format (PDF) files of the documents may be generated using Adobe Acrobat® software. Electronic documents will be maintained on a file server located at Advanced GeoServices' Pennsylvania office. Documents to be preserved will include, but not limited to, the following:

- Field activity records (i.e., logbooks, notebooks, chain-of-custody records, air bills, surveys, laboratory reports, photographs, etc.)
- Final deliverables submitted to DTSC
- Incoming and outgoing correspondence
- Transmittals
- Photographs
- Waste manifests
- Project memoranda
- Project notes
- Meeting agendas and minutes

3.5.2 File Preservation

In accordance with the Consent Order, all data, records, and documents shall be maintained in the project database and document management system described above for a period of at least six years from the date of termination of the Consent Order. The DTSC shall be notified in writing a minimum of 90 days prior to the destruction of any of the records, and shall be provided with the opportunity to take possession of any such records. The Exide Project

Manager will be responsible to ensure all project documents are appropriately stored and maintained.

Project documents include electronic data and database of field and analytical measurements. Daily backups of electronic data will be performed and appropriately stored. The Project Manager is responsible to ensure all individuals on the distribution list receive current copies of all documents.

3.6 ASSESSMENT/OVERSIGHT

This section describes the activities associated with assessing the effectiveness of the project QA/QC procedures in terms of audit procedures, corrective action, and reports to management.

Internal audits will be the responsibility of the Project Manager to perform. Performance and system audits will be conducted as presented in the following paragraphs with additional audits performed if problems are discovered. System audits are qualitative reviews of project activities to check that the overall QA program is functioning. Performance audits are quantitative checks on different aspects of internal support or project work, and are most appropriate for environmental sampling and analysis activities. It is anticipated that one internal system audit and two field performance audits will be conducted as part of the project audit program.

Advanced GeoServices' Project Manager will also be directly responsible for the internal system and field performance audits anticipated during the project. The internal system audit will involve checking that project documentation is complete. The field audits will involve observing field activities to check that the QA/QC procedures described in this SAP and other related work plans are being followed and that the required field documentation is complete. Problems or deviations from the procedures will be brought to the attention of, and discussed with, field personnel so that corrections can be made immediately.

On completion of each internal and field audit, the Project Manager will document any deficiencies or problems encountered and the proposed corrective measures. It will be the Project Manager's responsibility to make sure that all of the recommended corrective actions are implemented in a timely manner. Copies of the audit memoranda and any follow-up correspondence will be included in the project files.

3.6.1 Corrective Action

An important part of a QA program is a well-defined, effective policy for correcting problems. The QA program is established to prevent problems, but it also serves to identify and correct those that exist. Usually these problems require either on the spot, immediate corrective action or long term corrective action.

The corrective action system used during the field activities is designed to quickly identify problems, and solve them efficiently. The Project Manager is responsible for the direction of this system and receives full support from management for its implementation. The essential steps are:

- Identify and define the problem.
- Assign responsibility for investigating the problem.
- Determine a corrective action to eliminate the problem.
- Assign and accept responsibility for implementing the corrective action.
- Implement the corrective action.
- Verify that the corrective action has eliminated the problem.
- Document the problem identified, the corrective action taken and its effectiveness in eliminating the problem.

Corrective action procedures that will be used to resolve deficiencies found during routine activities or QA audits of field, laboratory, or office activities are as described in the following section.

3.6.1.1 **Corrective Action Resulting from Routine Activities**

Deficiencies found during routine activities will be resolved by implementing corrective action as part of normal operating procedures by staff. Corrective actions of this type will be noted in the field or laboratory logbook; no other formal documentation is necessary unless further corrective action is required. If normal procedures do not solve the problem, the staff will verbally inform the Project Manager of the problem and, if significant, the problem will be documented in a formal memo addressed to the Project Manager and copied to the project file. The Project Manager will be responsible for implementing or assigning personnel to problem resolution.

3.6.1.2 **Corrective Action Resulting from QA Audits**

Deficiencies encountered during a QA audit will be corrected as soon as possible. The Project Manager is responsible for completion of appropriate corrective action. The procedures used to expedite corrective action are as follows:

- Auditor verbally notifies the Project Manager and field personnel immediately during audits of deficiencies found.
- The Project Manager institutes corrective action as soon as possible.
- The Project Manager distributes the audit report promptly.

3.6.2 <u>Quality Assurance Reports to Management</u>

Reports that present field or laboratory measurements will contain a QA section addressing the quality of the data and its limitations. The QA section will address the following points as appropriate:

- Adherence to the work plan. Deviations from the work plan and DQOs will be explained and documented.

- Precision, accuracy, and completeness of the data reported, in quantitative terms, as compared with the objectives set for those parameters.
- Representativeness and comparability of data in qualitative terms as compared with objectives set for those parameters.
- Changes and revisions to the documents governing field work.
- Summary of QC activities, including development of standard operating procedures (SOPs) and QC procedures.
- Summary of QA activities.
- Results of performance and/or system audits.
- Description of quality problems found.
- Description of corrective actions taken.

Any deviations from the plans that may have generated results inconsistent with the DQOs will be discussed with the decision-makers and users and reconciled appropriately. Any limitations of the data and the corresponding final resolutions will be included in the QA section of the reports.

All documents produced as part of the project will undergo peer review by Advanced GeoServices' staff. The review of each document will be recorded on a peer review form. The Project Manager is responsible for ensuring that all technical comments are addressed. The Internal Review Draft is revised based on the peer review comments to become Exide's draft version of the document. Comments by Exide will be incorporated into the final document to be submitted to DTSC.

4.0 SAMPLING RATIONALE

4.1 PRE-REMOVAL SAMPLING

Sampling of the soils/fill materials surrounding the stormwater system pipes/structures will be conducted to establish the limit of lead contamination above 320 mg/kg, the CHHSL industrial soils standard, for the purposes of delineating materials requiring removal and to support closure of the stormwater system as ancillary equipment to Interim Status Unit 46 pursuant to the requirements of DTSC Permit Writers Instructions – Closure, Section 3.8 – Soil Sampling Plan. Additional information required as part of closure will be obtained during post-removal sampling (Section 4.3) immediately beneath the Stormwater System pipes and structures. As required by DTSC, soils/fill materials within 1.5 feet of the outside wall of the pipe or structure and up to 10 feet below the ground surface will be considered for possible removal as part of the ERIMWP. There are approximately 3460 lineal feet (LF) of pipe and 36 structures (manholes or sumps) associated with the stormwater system. Impacts to subsurface soil or impacts to groundwater attributable to leakage from the stormwater system that extend beyond the limits of the ERIMWP (if any) will be addressed as part of the ongoing RFI.

Since it is not feasible to take samples at depth intervals directly below an in-place pipe or structure while the pipe or structures remain in-place, boring locations will be off-set from the centerline on alternating sides of the pipe and on those sides of each structure not connected to piping. Samples will be taken from borings at the locations identified during the recent video surveying as exhibiting pipe damage, having accumulated water or sediment or where there is sagging or an abrupt change in alignment. Soil borings will be located at a distance of approximately 1.5 feet beyond the outside wall of the pipe. Locations within 25 feet of each other will be combined into a single boring location. For pipe runs where a video survey was not performed or where no issues were identified for greater than 50 feet, boring locations will be set at approximately 30 foot intervals on alternating sides of the pipe. Borings will also be placed at locations approximately 1.5 feet from the outer wall on sides of manholes or sumps not connected to piping. Boring locations will be laid out prior to the start of drilling activities at the

approximate locations shown on Plate 1. Actual boring locations will be located in the field by measuring from structures. Any off-sets from the marked locations will be documented on a plan. The location of completed borings will also be documented utilizing a hand-held GPS unit.

Cores will be taken at each location using a Geoprobe® direct push technology to a depth of 10 feet below the ground surface (bgs). Each core will be logged under the supervision of a licensed California Professional Geologist to identify the soils/fill materials present and screened with a PID. Completed logs will be reviewed and sealed by the supervising Professional Geologist. For cores obtained along the pipe run on the west side of the North Yard (between existing inlet structures MH-7 and MH-2), the cores will also be screened with a Geiger counter. Sample depths are targeted towards identifying releases from the storm sewer pipes and structures which would impact materials below the invert. Consequently sampling above the crown of the pipes is limited to periodic (approximately 25%) characterization of the near surface materials with more frequent sampling just above and below the crown of the pipes as shown on Figure 4-1. The near surface materials are expected to consist of a few types such as slag fill, soil fill and native soils. Analysis of slag fill samples may be reduced at the discretion of the Professional Geologist if the material is visually consistent and uniform. Soil fill and native soil will be sampled to the extent needed to determine whether the material can be reused.

The overall depth of sampling during the pre-removal phase is limited to the 10 foot bgs removal limit. Deeper borings are proposed along the alignment of the existing stormwater system as part of the RFI. In advance of the sampling, the pipe inverts at the boring locations will be approximated based on the measured inverts at the nearest structures. Samples will be taken from depths corresponding to the pavement subbase (above the crown of the pipe) at an estimated 25% of the boring locations. Slag will not be sampled. Deeper samples will be taken at the interval from 6 inches above the pipe crown to 6 inches below the crown, from the pipe invert to 12 inches below the invert, from 12 to 24 inches below the invert and at 10 feet bgs. If the interval between 2 feet below the pipe or structure invert and the 10-foot depth is greater than 3 feet, then an additional sample will be taken at the mid-point of the interval. This sample and the 10-foot depth sample will not be sent to the laboratory unless data at the shallower depths

indicated lead concentrations above 320 mg/kg. Additional samples may be taken of stained, odorous or very wet soil/fill materials.

Each sample will be field screened for lead using the XRF. Ten Percent of the samples field screened with the XRF will be sent to the laboratory for metals, pH and sulfate analyses. Soil intervals that show staining, odor or detections >10 ppm above ambient conditions with the PID will be extracted from the sample core utilizing a multi-functional sampling device (MFSD), following USEPA Method 5035 as described in the DTSC/Cal–EPA Method 5035 Guidance Document, and sent for VOC, PAH and TPH extractable (DRO/GRO/ORO) analysis.

4.2 CHARACTERIZATION OF SOIL/SEDIMENTS WITHIN THE REMOVED PIPES

Video surveying identified locations where soil/sediment accumulated within the storm sewer pipes as shown on Plate 1. When the pipes at these locations are being removed, one sample of the accumulated soil/sediment and liquid (when present) per pipe run will be collected and analyzed for metals (CAM 17 plus aluminum), VOC (TCL), PAHs, TPH extractable (DRO/GRO/ORO), pHand sulfate. This information will be useful in understanding the possible impact of the storm sewer pipes on the surrounding soils during the RFI.

4.3 POST REMOVAL SOIL SAMPLING

The results of the pre-removal soil testing will be utilized to delineate limits of Surrounding Soils (soils with lead concentrations above 320 mg/kg requiring removal as part of the ERIMWP and stormwater system replacement). The excavation will not extend beyond 1.5 feet past the outer wall of the pipe or structure being removed or beyond 10 feet bgs. Unless justified by location specific physical conditions, pre-removal soil samples from a single boring on one side of the pipe will be interpreted as representing the entire cross-section at that location. This means that at those locations where the sample is >320 mg/kg lead, the excavation limits will extend to 1.5 feet on either side of the existing pipe. If the results are <320 mg/kg the excavation will be limited to the width necessary to remove the existing and install the new system.

Contractor will remove the existing stormwater system backfill utilizing means and methods that minimize disturbance of the bedding material and allow segregation of materials as determined by pre-removal soil borings. After stabilizing the excavation sidewalls for safe entry and before digging below the bedding material, the sampling technician shall enter the excavation. The sampling technician shall visually evaluate and document the freshly exposed bedding material for signs of excessive moisture, staining or discoloration that could be an indication of leakage from the pipes or structures. After completion of the visual evaluation, the technician shall take direct XRF readings for total lead on the bottom and accessible sidewalls (approx. 1 foot above the bottom) of the excavation. Direct read XRF lead results shall be recorded in the electronic memory of the XRF unit and in a field logbook. Locations shall be recorded based on distance from the closest structure. Direct XRF readings shall be taken at locations corresponding to the center of the former structures and pipe joints for the piping removed (approximately every 20 feet for plastic and corrugated metal pipe and approximately every 10 feet for concrete and asbestos cement pipe). XRF screening locations may be shifted up to 5 feet along the alignment of the trench to avoid wet (>20% moisture) or saturated soils. GPS coordinates will be required for direct read XRF screening locations. The estimated number of direct XRF bottom readings for lead is 200. The estimated number of direct XRF sidewall readings for lead is 400 (one on either side of the bottom reading unless inaccessible because of sheeting or shoring or similar measures used to stabilize trenches). All direct XRF readings will be adjusted using the correction factor developed for corresponding material during the pre-removal sampling. PID readings will be taken from the bottom of the excavation at locations coinciding to the direct XRF reading. The top 1 to 2 inches of soil shall be scraped away before taking the PID reading.

If the XRF direct readings are above 320 mg/kg (after adjustment) and the excavation has not reached the required removal limits for Surrounding Soil then the remediation will continue until the excavation limits are reached or direct readings on the XRF (after adjustment) are <320 mg/kg. The XRF will also be used to screen excavated soils to be retained on-site as backfill for antimony, arsenic, cadmium, copper lead and zinc.

After the excavation has reached the limits of Surrounding Soil and the excavation stabilized by the excavation Contractor, the Sampling Technician will collect post-removal soil samples (ex-situ post-removal samples) from 0-12 and 12-24 inches below the bottom of the excavation using a hand-auger or driven subsoil probe. The ex-situ post removal soil samples will be collected from beneath the location of former stormwater system structures and every other pipe-joint along the alignment of the former pipe except within those areas underlain by slag fill or exhibiting area wide impacts not attributable to the stormwater system. Supplemental ex-situ post removal soil sample locations will be added in between the presecribed "every other pipe-joint" spacing if the results of the visual evaluation and PID screening performed after pipe removal suggest localized impacts from the removed stormwater system. Ex-situ post-removal samples will be screened immediately upon extraction from the sampling sleeve using a PID to identify those samples with VOCs at levels above background concentrations. Bedding and subbase samples (with preference to those indicating a PID reading above background or exhibiting odor or staining) will be collected for organics analysis and submitted for laboratory analysis for VOC (Method 8260B), PAHs (Method 8270C) and TPH (Extractable DRO/GRO/ORO) (Method 8015B). Ex-situ post-removal soil samples shall be screened for total lead, as well as antimony, arsenic, cadmium, copper and zinc using the XRF (Method 6200). Approximately 10% of the ex-situ samples screened with the XRF shall be submitted for laboratory analysis (CAM 17 metals plus aluminum (6010B)). Soil samples submitted for laboratory analysis will also be analyzed for moisture content, pH and sulfate. Ex-situ post-removal soil sample locations will be located utilizing a handheld GPS.

If materials in the base of the excavation are stained, odorous or saturated, then samples of the soils one foot below the bottom of the excavation will be collected and analyzed for metals, VOC, PAHs, TPH extractable (DRO/GRO/ORO), pH, moisture content and sulfates. Evaluation of this data will be conducted as part of the RFI.

4.4 CHARACTERIZATION SAMPLING FOR DISPOSAL PURPOSES

Excavated soils will be segregated to the extent possible to maximize the reuse of clean materials and minimize the amount of soil that must be disposed off-site. Imported soil fill materials will be sampled in accordance with the DTSC Clean Fill Information Advisory at a frequency of one sample per 250 cubic yards of imported material. Excavated soils/fill materials with lead concentrations above 320 mg/kg will be sampled in accordance with the prospective landfill's acceptance criteria.

5.0 REQUEST FOR ANALYSES

5.1 ANALYSIS NARRATIVE

5.1.1 Soil Sample Analysis for Pre-Removal Investigation

Soil sample analysis will include the following:

- Ex-Situ XRF Screening - all pre-removal soil samples for Pb and all post-removal soil samples for Sb, As, Cd, Cu, Pb and Zn utilizing USEPA Method 6200. Ten percent submitted for laboratory analysis of CAM 17 metals plus aluminum.
- In-Situ XRF Screening – post removal excavation bottom and side walls (where accessible) for Pb coinciding with every pipe joint
- Field Screening with PID – all pre and post-removal ex-situ samples. Post removal bedding locations exhibiting staining or odor.
- pH (Laboratory) – all sample submitted for lab analysis
- Sulfate – all sample submitted for lab analysis
- Percent Moisture - all sample submitted for lab analysis.
- VOCs, PAHs and TPH Extractable (DRO/GRO/ORO) ex-situ samples with staining or odors observed or that had detections with the PID 10 ppm or greater above ambient conditions.
- Gamma Radiation Field Screening – Screening ex-situ samples west of RMPS between existing structures MH-7 and MH-2.

Additional information is provided in Table 3-1.

5.1.2 Soil Sample Analysis for Post-Removal Sampling

As discussed in Section 4.3, the excavation sidewalls (1 ft. above the bottom) and base will be screened utilizing the XRF to obtain direct readings for lead from exposed soil surface (in-situ) after pipe/structure removal. Post-removal direct XRF screening shall occur at the pipe joints, where the bottom of the pipe was significantly degraded and beneath the removed structures. A PID will be utilized to assess whether VOC contamination may be present. Sidewalls will be tested at the same locations where the excavation base samples are taken. The bottom and sidewalls of the excavation west of RMPS between MH-2 and MH-7 will be screened for gamma radiation every 10 feet along the former alignment of the stormwater system.

Sidewalls will not be accessible when a trench box is being used for excavation stability and consequently no sidewall testing will occur in those areas. Further investigation laterally may occur as part of the RFI.

After completion of remediation activities to remove Surrounding Soils, ex-situ post-removal soil samples will be collected from depth increments of 0 to 12 and 12 to 24 inches below the bottom of the excavation using a hand-auger or subsoil probe. Post removal sample locations will be located approximately 40 ft. apart along the alignment of the former pipe, except where the bottom of the excavation terminates in slag fill. Each sample will be screened for Sb, As, Cd, Cu, Pb and Zn using the XRF following USEPA Method 6200. Samples for organics analysis (VOC, PAH and TPH) shall be collected from the 12 to 24 inch ex-situ post-removal soil samples corresponding to those surface locations exhibiting odor, staining or PID readings >10 ppm above background). Samples for organic analysis shall be collected following USEPA Method 5035.

5.1.3 Waste Characterization Sampling

Materials destined for off-site disposal will consist of soils/sediments removed from the pipes and structures (if not processed through the on-site recovery system), the pipes and structures

themselves and excavated soils with lead concentrations above 320 mg/kg. Characterization sampling shall be completed at the frequency and for the parameters required by the proposed disposal facility, but at a minimum shall include TTLC and STLC metals, VOC and SVOCs.

5.2 ANALYTICAL LABORATORY

Primary laboratory analyses for the project will be performed by Calscience Environmental Laboratories Inc. (Calscience), of Garden Grove, California. The laboratory Project Manager will be responsible for assuring that all samples are analyzed in accordance with approved QA/QC procedures. A copy of Calscience's Quality Assurance Manual can be found in Attachment B.

5.3 XRF ANALYSIS OF REPRESENTATIVE SOILS/FILL MATERIALS

The samples will be analyzed following USEPA Method 6200 and the lead results compared to the laboratory test results using a least-squares linear regression analysis. An R^2 value greater than 0.7 will be sought for the analysis to establish that the XRF can be used with confidence in the field to screen the excavations.

6.0 FIELD METHODS AND PROCEDURES

6.1 FIELD EQUIPMENT

6.1.1 X-ray Fluorescence Analyzer

The XRF that will likely be used for developing a correlation with laboratory data and for screening the excavation base and side walls during removal activities is a Niton XL3t GOLDD+. USEPA Method 6200 and the manufacturer's guidelines will be followed for all analyses.

6.1.2 Photoionization Detector

The PID that will likely be used for soil sample screening and air monitoring during drilling operations is a MiniRAE 2000 (10.6eV bulb). The PID will be calibrated at the beginning of each day of use against a "zero gas" and a calibration standard of known concentration. In calibration mode, the PID will prompt the user to "connect zero gas." Ambient air is used as the zero gas to account for "background" interference. The PID will next prompt the user to "connect span gas." An evacuated Tedlar sample bag is filled with a 100-ppm isobutylene in air mixture. The appropriate calibration gas concentration is entered into the PID using the instrument keypad. The Tedlar bag is connected to the instrument and the valve is opened. The instrument completes the calibration process automatically. Upon completion, the PID will show readings within 10% ± of 100 ppm. The date, time, and calibration gas type and concentration used during each calibration event will be recorded in the field logbook. Field personnel performing the calibration will also record any problems encountered during PID calibration in the field logbook.

6.1.3 Geiger Counter

The Geiger counter will be a Ludlow Model 19 Geiger Counter, or similar. The Geiger counter will be operated in accordance with the manufacturer's instructions. Background radiation readings will be collected each day radiation screening is being performed prior and after completion of field screening activities.

6.2 FIELD TESTING

6.2.1 XRF Screening

The XRF will be used to analyze in-situ and ex-situ samples. In-situ analysis will be in a direct read mode on the excavation base and accessible sidewalls. Surface preparation procedures will follow Section 11.3 of USEPA Method 6200 and will consistent of smoothing the ground surface with a trowel, removing any large or non-representative debris and tamp the surface firmly to create as smooth of a surface as possible. A thin film may be placed over the XRF detector to prevent contamination of the instrument. The film would be replaced by a new film after each sample location.

Ex-situ readings will be taken on samples collected during the pre-removal soil borings and post removal hand augers. Ex-situ samples will be collected from the designated sample intervals, placed in a clean plastic bag, homogenized and analyzed with the XRF utilizing the procedures described in USEPA Method 6200. Analysis shall consist of obtaining 5 separate readings and averaging the results to obtain the representative value pursuant to the procedures described in USEPA Method 6200. Laboratory confirmation samples will be taken from 10% of the ex-situ XRF samples. The samples for laboratory analysis (excluding organics) will be taken from the same plastic bag analyzed for total lead analysis by USEPA Method 6010B.

6.2.2 Photoionization Detector for VOC Field Screening of Soil Samples

Cores of the subsurface materials obtained with the Geoprobe® or subsurface soil probe will be screened for VOCs in the field as a basis for selecting soil samples for possible chemical analysis. As soon as the sample collection liner is opened, the probe of a properly calibrated PID equipped with a 10.6eV lamp is used to sweep near the surface of a freshly exposed soil. The organic vapor content, if any, is then recorded on the field boring log. If field observations or PID screening indicates possible soil contamination equal to or greater than 10 ppm above background concentrations, a soil sample will be collected for chemical analysis.

6.2.3 Soil Sample Geiger Counter Field Screening

Samples collected from soil borings completed for the pipe run on the west side of the North Yard will be screened with a Geiger counter following collection and prior to submission to the laboratory for analytical testing. The sampler will lay the sample core on a flat surface, and will pass the Geiger counter over the full length of the sample. Results will be recorded in the bound field logbook.

6.3 SOIL BORINGS

The soil borings will be completed utilizing direct push drilling methods with a truck-mounted rig, hand-augers or driven sub-soil probe. Direct push refers to tools and sensors that are "pushed" into the ground without the use of drilling to remove soil or to make a path for the tool. A Geoprobe® direct-push rig relies on a relatively small amount of static (vehicle) weight combined with percussion as the energy for advancement. Direct push drilling is one of the faster methods of drilling and sampling shallow borings and does not generate soil cuttings. The Geoprobe® system uses hollow, steel push rods ranging from 1-inch to 3.25-inches in diameter that are typically four feet in length. As the push rod is advanced into the ground, additional lengths of rod are added. Various sampling tools can be attached to the rods to allow for continuous or depth-discrete soil sampling.

Hand augers are advanced by rotating/screwing a stainless steel auger "bucket" into the soil to displace and retrieve samples usually in increments on the order of 6 to 12 inches. Subsoil probes are driven into the soil using a weight/hammer to advance the sampler. Hand augers and subsoil probes have depth limitations generally less than 4 feet due to limited amounts of downward pressure and difficulty extracting samples from the ground. Their most significant benefit is that they can be utilized in areas inaccessible by a Geoprobe or similar truck mounted device.

6.3.1 Boring Location Preparation

Regardless of boring type, Site preparation at the boring locations will involve identifying subsurface utilities; coring, augering or sawing through pavement materials; verifying the absence of subsurface utilities at the boring locations; setting up work zones; providing the containers required to contain waste materials; and laying down polyethylene sheeting or equivalent to minimize the post-drilling cleanup operation.

Prior to mobilizing for the pre-removal investigation, Underground Service Alert (USA) will be called to identify subsurface utilities within 10 feet of either side of all pipe runs and structures. In addition, Exide will arrange for a private utility locating company to identify any other potential subsurface obstructions using geophysical instruments. The presence of power lines and other overhead features will be taken into consideration prior to drilling or other related activities.

If the boring location is paved with concrete or asphalt, it will be cored or saw-cut to provide access to the underlying soil.

The work support zone will be delineated in the field using a combination of orange traffic cones, barricades, and yellow caution tape as necessary. The dimensions of the zone will be established in the field based on site-specific geography. At a minimum, the work zone will be

large enough to accommodate the drilling equipment, any required support vehicles, waste containers, and a sample processing table.

6.4 SOIL SAMPLING

Relatively undisturbed soil samples can be collected for chemical analyses using a Geoprobe® macro core sampler (or similar direct-push brand) or driven subsoil probes. Both devices utilize closed piston samplers for soil sampling at discrete depths. Their designs allows the sampler to remain completely sealed while driven to depth. The sampler recovers a soil sample typically measuring 24 to 48 inches (depending on tube length) in length and 1.5 inch in diameter. The sampler contains either clear acetate liners or PVC, or stainless steel sleeves. At selected depths, the drive tip at the end of the tool is detached and the sampler is advanced by direct push or by using the vibrating hammer to allow undisturbed soil to enter the sampler. After retrieval from the boring, the sampling tool is disassembled, the sample sleeves removed, and plastic caps lined with Teflon foil fitted to each end of the sleeve. When sampling for targeted intervals the sample sleeve can be cut to lengths or sections representing the desired depths and immediately capped. The ends of the sleeve sections abutting the targeted interval not being retained can be screened for VOCs using a PID at the time of collection and the capped section placed on ice until completion of the hole and a determination made regarding which intervals will be further sampled with a multi-functional sampling device (MFSD) following USEPA Method 5035 for laboratory VOC and TPH analysis. PAH samples do not need to be collected utilizing a MFSD.

Soil sampling using a hand-auger produces relatively disturbed soil samples

6.5 BORING ABANDONMENT

Direct-push soil borings completed to 20 feet bgs or less will be abandoned using granular bentonite. Bentonite will be placed by hand into the boring from grade and hydrated in place with potable water. Borings deeper than 20 feet shall be abandoned utilizing a pre-hydrated cement-bentonite grout placed in the holes utilizing a tremie-pipe.

6.6 DECONTAMINATION PROCEDURES

This section describes the equipment decontamination procedures to be used during the field activities. Personnel and protective equipment decontamination procedures are discussed in the HASP. All solid and liquid wastes will be contained and handled as described in Section 8.0.

All downhole equipment used during drilling and soil sampling will be cleaned thoroughly prior to entry into each borehole by high-pressure steam cleaning or by scrubbing and washing in an Alconox detergent solution followed by one potable and one distilled water rinse. Cleaning and decontamination of the Geoprobe® will be performed prior to entering the site and prior to leaving the site.

Sampling equipment that will be in direct contact with soil samples for chemical analyses will be disassembled and thoroughly cleaned prior to introduction to the soil boring by the following procedure:

- wash and scrub the equipment with tap water;
- manual scrub with non-phosphate soap solution;
- tap water rinse;
- 10% nitric acid rinse (if sampling for metals);
- distilled/de-ionized water rinse;
- pesticide grade acetone rinse (if sampling for organics); and,
- air dry.

This cleaning procedure will be repeated between successive sampling attempts to avoid cross-contamination at different depth intervals.

7.0 SAMPLE CONTAINERS PRESERVATIONS AND STORAGE

Sample quantities, types, and locations will be determined before the actual fieldwork commences. The field sampler will be responsible for the care and custody of the samples until properly transferred. Protective gloves will be worn at all times when handling samples and are required to be changed prior to handling different samples. For example, when handling soil samples retrieved from the drill rig, gloves should be changed before handling the next set of samples from a deeper interval. Also, gloves should be changed when the field personnel's tasks change (i.e., going from decontamination activities to soil sampling activities, etc.).

Sample custody begins with the shipment of the empty sampling containers to the site. All sample containers are shipped from the laboratory in sealed coolers or cartons with appropriate tamper-proof seals and custody documentation. Custody transfer will be documented on the chain-of-custody form. Each sample will be labeled and properly sealed immediately upon collection.

7.1 SOIL SAMPLES

Soil samples for chemical analyses will be collected using the Geoprobe® Macro Core Sampler, drive sampler, hand-augers, or stainless steel trowels. On recovery of the sampler (geoprobe or drive sampler), the sample liner will be cut open in order to log the core and screen it with the PID and the Geiger counter where necessary. Samples of the subsurface materials will be obtained at the proscribed depth intervals and placed into the appropriate container (Plastic bags for inorganics, vials for VOAs and PAH, and jars for PAHs, sulfate and moisture content. The soil-filled sample containers will be labeled and immediately placed on ice in a cooler. Soil samples for possible chemical analysis will be maintained in a chilled state until delivery to the analytical laboratory (typically on the day of collection). Specifications for sample preservation and the holding times are summarized in Table 7-1.

The selection of soil samples for VOC analysis will be based on PID readings above ambient conditions or where staining is observed. DTSC currently requires EPA Method 5035A for collection of samples for analysis of volatile compounds. Soil samples to be analyzed more than four hours after collection (i.e., from a stationary laboratory) will be collected immediately upon core logging and PID screening using EnCore® or Terra Core® samplers.

8.0 DISPOSAL OF RESIDUAL MATERIAL

Investigation-derived wastes (IDWs) likely to be generated during site investigative activities include soil and sediment containing metals. Excess soils from the borings will likely be containerized in either 20-cubic yard roll-off bins with polyethylene liners or in United Nations (UN)-approved 55-gallon steel drums. The containers will be moved to the reverb furnace containment building while arrangements are made for disposal. Discrete samples of each solid waste type will be collected from each bin or drum and combined, by equal volume, into a single composite sample on site or at the analytical laboratory. The composite soil samples will be submitted for VOC analysis using EPA Method 8260B and analyzed for metals following Toxicity Characteristic Leaching Procedure (TCLP) extraction method or other parameters as specified by the disposal or recycling facility. Disposal options will be considered by Exide based on the results of these analyses and subsequent profiling of the wastes. Exide will arrange transportation and disposal of the IDWs, as appropriate.

Decontamination rinsate will likely be stored in 55-gallon drums or 250 +/- gallon DOT approved polyethylene totes and sent to the on-site wastewater treatment plant and processed with facility liquids.

9.0 SAMPLE DOCUMENTATION AND SHIPMENT

This section describes procedures for sample custody that will be followed for sample collection, transfer, analysis, and disposal throughout the investigation. The purpose of these procedures is to assure that the integrity of samples is maintained during their collection, transportation, and storage prior to analysis. Sample identification documents will be carefully prepared so that identification and chain-of-custody records can be maintained and sample disposition can be controlled. Forms and labels will be filled out with waterproof ink. Identification documents that will be used during the investigations are sample labels and chain-of-custody forms. Samples of the documents are presented in Attachment C.

9.1 FIELD NOTES

Field logbooks will be used to record daily activities as they relate to the progress of the investigation. Completed field logbooks will be provided to the Project Manager in a timely manner and will be retained in the project files according to the project number for that task. All entries must be legible, in ink, and primarily factual in content. Field observations can be entered but should be noted accordingly. At a minimum, field logs will include the following:

- Project name and number
- Site name and location
- Arrival and departure date/time
- Name and affiliation of personnel onsite, and personnel contacted
- Author name and date
- Field instrument calibration methods and identification number
- Chronology and location of activities
- Sampling locations on site map
- Sample identification numbers, amount collected, sampling method, and container (size/type) for each sample collected, including QC samples.

Sample processing techniques such as filtration, compositing, and preservation techniques should be noted.

- Date and time of sample collection
- Name of sampler
- Field observations and applicable comments
- Number of shipping coolers packaged and sent
- Name and address of all receiving laboratories
- Any modifications or deviations from work plan or the QAPP.

The calibration data included on the daily field log should include the date and time that each instrument was calibrated, name of the person performing the calibration, the type and model number of the instrument being calibrated, the strength of the calibration media (if applicable), and the instrument readings during the calibration.

9.2 SAMPLE LABELS

Sample labels are necessary to prevent misidentification of samples. Preprinted sample labels will be provided. Where necessary, the label will be protected from water and solvents with clear label-protection tape. Each label contains the following information:

- Project name
- Project number
- Name of collector
- Date and time of collection
- Field identification number or sample identification number
- Preservative used (if applicable)
- Analyses required

9.3 CHAIN OF CUSTODY

A chain-of-custody record will be filled out and accompany every sample to the laboratory to establish the documentation necessary to trace sample possession from the time of collection. A copy of the chain-of-custody form will be retained in the investigation files according to project/task number. An example chain-of-custody form is shown in Attachment D. The following information will be recorded on the form:

- Sample number or identifications
- Name of sampler(s)
- Signature of collector, sampler, or recorder
- Location of project
- Project manager's name
- Date of collection
- Place of collection (site location)
- Sample type
- Analyses requested
- Inclusive dates of possession
- Signature of person receiving sample
- Laboratory sample number, where applicable
- Date and time of sample receipt

9.4 SAMPLE PACKAGING AND SHIPMENT

Samples will always be accompanied by a chain-of-custody record. When transferring samples, the individuals relinquishing and receiving the samples will sign and date the chain-of-custody record. During the sampling procedure, the sample coolers and samples will remain in the control of the field sampling team at all times. Should the samples be left unattended, the samples will be stored in a secure area of the site to which only the field sampling team has access.

Samples will be packaged properly for shipment, including isolation of samples thought to have high chemical concentrations, and dispatched to the appropriate laboratory for analysis. Samples will be placed on ice, if necessary, using double-bagged ice. Ice should also be placed on top of the samples. Label coolers correctly with "Fragile" and "This-End-Up" labels, as appropriate. Hazardous materials labels may be required if the coolers are being shipped by common carrier. Custody seals are not deemed necessary when the samples will be in continuous possession of technical or laboratory personnel. Custody seals will be used when samples are shipped via courier service. The chain-of-custody record will accompany each shipment. The method of shipment, courier name(s), and other pertinent information will be entered in the chain-of-custody record. A copy of the chain-of-custody record will be retained by the sampler and forwarded to the Project QA Manager for review and filing. The project personnel or designated couriers will transport the coolers to the analytical laboratories.

9.4.1 Laboratory Custody Procedures

A laboratory designated sample custodian will accept custody of the shipped samples and verify that the information on the sample label matches that on the chain-of-custody form(s). Pertinent information as to sample condition upon receipt, method of shipment, pickup and delivery, and courier will also be checked on the chain-of-custody form(s). The custodian will then enter the appropriate data into the laboratory sample tracking system. The laboratory custodian will use the sample number on the sample label or assign a unique laboratory number to each sample. The custodian will then transfer the sample(s) to the proper analyst(s) or store the sample(s) in the appropriate secure area. The laboratory will also check the temperature of the sample cooler upon arrival. The laboratory will ensure that all laboratory analysis is performed within the prescribed holding times.

Laboratory personnel will be responsible for the care and custody of samples from the time they are received until they are exhausted. Data sheets and laboratory records will be retained by the laboratory as part of the permanent documentation for a period of at least 3 years.

9.4.2 Sample Storage and Disposal

Samples and extracts will be retained by the analytical laboratory for up to 30 days after the data are reported by the laboratory. Unless notified otherwise by the Project Manager, excess or unused samples should be disposed by the laboratory in a manner consistent with appropriate methods adopted by the laboratory.

10.0 QUALITY CONTROL

10.1 FIELD QUALITY CONTROL SAMPLES

This section describes procedures for collecting QC samples in the field. Other field QC procedures, such as field instrument calibration and equipment decontamination, are described elsewhere in this SAP.

10.1.1 Field Duplicate Samples

At a minimum, field duplicates of soil samples will be collected at a rate of 5 percent of the samples collected. Field duplicate samples will be collected, preserved, packaged, labeled, and sealed in a manner identical to the other samples being collected. Field duplicates will be collected from areas where moderate to high levels of contamination are anticipated. Duplicate samples will be analyzed for the same target analytes as the original sample. For the XRF analysis, field duplicates will consist of taking a second reading on the sample at the same location as the first sample at a frequency of 5 percent of the samples of each material type encountered.

10.1.2 Equipment Decontamination Blanks

Equipment decontamination blanks will be collected from the final rinse water from equipment decontamination. The blank is prepared in the field by pouring or pumping deionized water through the sampling equipment and into the appropriate sample containers after equipment decontamination. The decontamination blank serves as a check to verify the effectiveness of the decontamination procedures. An equipment decontamination blank will be collected at a target frequency of one per day. Decontamination blanks will be analyzed for all target analytes submitted for analysis on that day.

10.1.3 Field Blanks

A field blank consists of organic-free water supplied by the analytical laboratory and is prepared in the field by pouring an appropriate volume of water from a contaminant-free container into the sample container without contacting sampling equipment. The field blank serves as a measure of sample contamination resulting from ambient field/site conditions, such as fugitive dust or vapors. On soil sampling days, when an equipment decontamination blank is not required to be collected, a field blank must be collected.

10.2 LABORATORY QUALITY CONTROL SAMPLES

Two types of QC checks will be employed to evaluate the performance of a laboratory's analytical procedures. The QC checks represent the controlled samples introduced into the sample analysis stream and are used to evaluate the accuracy and precision of the chemical analysis program. The QC check samples will be introduced or analyzed based on the size of sample lots. A sample lot or batch will consist of greater than zero but fewer than 20 samples that are extracted and analyzed as a batch by the laboratory. Laboratory quality control (QC) samples will be collected in double volume at a frequency of 1 per 20 samples. These additional sample containers will be labeled "for matrix spike/matrix spike duplicate (MS/MSD) analysis" and will be used by the laboratory for their internal quality control. Samples for laboratory QC will be selected from locations where low levels of contamination are expected based on the available historical data. Samples with low levels of contamination are preferred for laboratory QC samples to minimize the possibility of diluting out the spike to a concentration below the quantitation limit. Laboratory QC samples will be designated on the chain-of-custody record and in the field logbook.

10.2.1 Method Blank/Reagent Blank

A laboratory-grade water blank is analyzed, along with all aqueous and non-aqueous samples submitted for analyses. The method/reagent blank is processed through all procedures, materials, reagents, and labware used for sample preparation and analysis. The frequency for method blank preparation and analysis is a minimum of 1 per 20 field samples or per analytical batch, whichever is most frequent. For VOC analysis by EPA Method 8260, the frequency for method blanks is 1 per every 12 hours of sample analysis, or 1 per 20 samples, whichever is more frequent. An analytical batch is defined as a maximum of 20 samples from one project that are analyzed together with the same method sequence, the same lots of reagents, and with the manipulations common to each sample within the same time period or in continuous sequential time periods. Samples in each batch are to be of similar composition or matrix. Calibration blanks are required for metals analysis to establish the analytical curve.

10.2.1.1 **Calibration Standards (Initial Calibration)**

The calibration standard is prepared in the laboratory by dissolving a known amount of pure (nominally 100 percent) analyte in an appropriate matrix. The final concentration calculated from the known quantity is the true value of the standard. All calibration standards must be traceable to certified reference materials or certified check standards. The results obtained from these standards are used to generate a standard curve, which can be used to quantify the compound in the environmental sample. Calibration standards at a minimum of five concentration levels and a blank will be used in generating a calibration curve for all organic analyses. With the exception of the mercury analysis, a minimum of three calibration standards and a blank will be used to generate a calibration curve for all inorganic analyses. A four-point calibration curve is required for mercury analysis. For organic analyses, a relative standard deviation (RSD) of the calibration factor (defined in method) of less than 20 percent over the working range of the curve is required before initial calibration is accepted. For inorganic analyses, a minimum correlation coefficient of 0.995 (using linear regression analysis) must be achieved before the initial calibration curve is considered linear and accepted.

10.2.1.2 **Check Standard (Continuing/Daily Calibration)**

The check standard is prepared in the same manner as a calibration standard. The final concentration calculated from the known quantity is the true value of the standard. The check standard result is used to monitor the continuing validity of an existing calibration curve or concentration calibration standard file. The check standards are known as the "continuing calibration verification standards". Continuing calibration standards must satisfy method-specific QC requirements prior to initiation of sample analysis.

To verify the accuracy of the analytical system at the low concentration end of the calibration curve, a second type of check standard is prepared at a concentration of two to five times the instrument detection limit and analyzed at the beginning (after calibration) and end of the day or analytical "run". The laboratory will have the option of analyzing two low-level standards as described above or analyzing a mid-level standard every 10 samples as described in SW-846 Method 8000 for GC analysis. The criteria for the two low-level standards are that the response for each analyte must not exceed a 15 percent difference when compared to the continuing/daily response.

10.2.2 <u>Laboratory Duplicates</u>

Aliquots (e.g., subsamples) are made in the laboratory from the same sample, and each aliquot is treated exactly the same throughout the analytical method. The RPD between the values of the duplicates, as calculated below, is taken as a measure of the precision (reproducibility) of the analytical method:

$$RPD = \frac{2(D_1 - D_2)}{D_1 - D_2} \times 100$$

Where:

RPD = relative percent difference

D_1 = first sample value

D_2 = second sample value (duplicate)

The duplicate is a measure of the precision of the laboratory sampling (i.e., aliquoting) and analysis procedure and of the homogeneity of the sample matrix as provided to the laboratory. Laboratory duplicates will be analyzed at a minimum frequency of 1 per 20 samples or per analytical batch.

10.2.3 Laboratory Control Sample (LCS)

LCS analyses (sometimes referred to as Method Control Samples (MCS)) are spikes on blank matrix to assess accuracy independent of matrix effects. These matrices are deionized water for water samples and reagents and for soil samples. The LCS is prepared by adding a known amount of target analyte to the matrix. If LCS analyses do not meet the recovery criteria, the LCS sample will be reanalyzed to determine if the failure is due to a transient instrumental condition. If the second analysis does not meet the recovery criteria, the LCS and the entire analytical batch will be re-extracted and reanalyzed within the holding time.

10.2.4 Matrix Spike and Matrix Spike Duplicate (MS/MSD)

A sample matrix spike is prepared by adding a known amount of the pure analyte to the environmental sample before extraction/digestion. The added analyte is the same as the analyte being assayed for in the environmental sample. An analytical spike is prepared by adding a known amount of analyte(s) to a known amount of sample digestate or extract. Background and interferences having an effect on the actual sample analyte will have a similar effect on the spike. The calculated percent recovery of the matrix spike is considered to be a measure of the relative accuracy of the total analytical method (i.e., sample preparation and analysis). The calculated percent recovery of the analytical spike is considered to be a measure of the relative accuracy of

the sample analysis procedure only. The matrix spike, the surrogate spike, and the analytical spike are also measures of the effect of the sample matrix on the ability of the methodology to detect specific analytes. When there is no change in volume due to the spike, percent recovery is calculated as follows:

$$R = 1OO(A-X)/T$$

Where:

R = percent recovery

A = measured analyte concentration after the spike is added

X = measured analyte concentration in the sample before the spike is added

T = value of spike

Tolerance limits for acceptable percent recoveries are established in the referenced methods and are summarized in the SAP (Appendix A). Project-specific QC acceptance limits may be established on a parameter-specific basis for each analysis method if, after sufficient data have been compiled, it is apparent that different limits than those specified in the referenced methodology should be applied. Matrix spikes will be analyzed at a minimum frequency of 1 per 20 samples of similar matrix or analytical batch. Analytical spikes and surrogate spikes are required for every sample for some analysis routines and specific methods.

For organic analyses, matrix spike duplicate samples are required at a specified frequency of 1 per 20 samples. A matrix spike duplicate is prepared from a second aliquot of the sample that was analyzed as the matrix spike. The relative percent difference (RPD) between the matrix spike and the matrix spike duplicate for each spike analyte must be reported.

10.2.5 <u>Surrogate Spikes</u>

Surrogate spikes are used to evaluate whether laboratory equipment is operating within the prescribed limits of laboratory QC and are checked by the laboratory for accuracy and proper

chemical identification. Surrogate spikes will be added, as appropriate, for organic analyses to all blanks, standards, and environmental samples.

11.0 FIELD VARIANCE

Any deviations from the Work Plan that may have generated results inconsistent with the DQOs will b e d iscussed w ith th e d ecision-makers and us ers a nd r econciled a ppropriately. Any limitations of the data and the corresponding final resolutions will be included in the QA section of the reports.

12.0 REFERENCES

Advanced GeoServices, 2012. *Revised Current Conditions Report.* October 5, 2012.

Advanced GeoServices, 2013. *Storm Sewer Inspection Report*. March 5, 2013.

Advanced GeoServices, 2013. *Comprehensive RCRA Facility Investigation Work Plan*. March 23, 2013.

Department of Toxic Substances Control, November 2004. *Guidance Document for the Implementation of United States Environmental Protection Agency Method 5035: Methodologies for Collection, Preservation, Storage, and Preparation of Soils to be Analyzed for Volatile Organic Compounds*.

U.S. Environmental Protection Agency, 2002, *National Functional Guidelines for Inorganic Data Review, EPA 540-R-01-008*, Office of Emergency and Remedial Response

U.S. Environmental Protection Agency, 2001. *EPA Requirements for Quality Assurance Project Plans*, (EPA QA/R-5), EPA/240/B-01/002, Office of Environmental Information.

U.S. Environmental Protection Agency, 2000 a. *Guidance for Data Quality Assessment: Practical Methods for Data Analysis* (QA/G-9), EPA/600/R-96/084, Office of Environmental Information

U.S. Environmental Protection Agency, 2000b. *Guidance for the Data Quality Objectives Process (QA/G-4),* EPA/600/R-96/055, Office of Environmental Information.

U.S. Environmental Protection Agency, 1999a. *National Functional Guidelines for Organic Data Review*, EPA540/R-99/008, Office of Emergency and Remedial Response

U.S. E nvironmental P rotection A gency, 1999b . *Test Methods for Evaluating Solid Waste Physical/Chemical Methods (SW-846*), Office of Solid Waste.

U.S. E nvironmental P rotection A gency, 1998, *EPA Guidance for Quality Assurance Project Plans (EPA QA/G-5),* EPA/600/R-98/018, Office of Research and Development.

TABLES

TABLE 3-1
SUMMARY OF LABORATORY METHODS AND QUALITY ASSURANCE GOALS
REMOVAL ACTION WORK PLAN
SAMPLING AND ANALYSIS PLAN

Exide Technologies
Vernon, California

SAMPLE TYPE	ANALYSIS	METHOD	PRECISION[1]	ACCURACY[1]
Soil	Title 22 CAM-17 Total Metals	SW-846 Method 6010B	35	75 - 125
	Total Aluminum	SW-846 Method 6016B	35	75-125
	Moisture Content	ASTM D2216	N/A	N/A
	pH	USEPA Method 9045D	35	75 - 125
	Sulfate	USEPA Part 136 Method 300.0	35	75 - 125
	TPH Extractable (DRP/GRO/ORO)	USEPA Method 8015M	35	in-house limits
	Appendix IX VOCs*	SW-846 Method 8260B	35	in-house limits
	PAHs	SW-846 Method 8270C	35	in-house limits
Solid Samples Equipment Blank	Title 22 CAM-17 Total Metals	SW-846 Method 6010B	20	75 - 125
	pH	SM 4500 H+ B	20	75 - 125
	Sulfate	USEPA Part 136 Method 300.0	20	75 - 125
	TPH Extractable (DRP/GRO/ORO)	USEPA Method 8015M	35	in-house limits
	Appendix IX VOCs*	SW-846 Method 8260B	20	in-house limits
	PAHs	SW-846 Method 8270C	20	in-house limits

Notes

SW-846 - USEPA "SW-846 Test Methods for Evaluating Solid Wastes - Physical/Chemical Methods" Revision 6, November 2004.

Part 136 - Section 304(h) of the Clean Water Act (40 CFR Part 136)

SM - Standard Methods for the Examination of Water and Wastewater

A percent completeness goal of 90% has been set for the laboratory analytical results.

[1] Check the methods for the values of specific species.

* Appendix IX parameter list excluding herbicides, pesticides, dioxins and furans. Dioxin/furans will be analyzed in select samples as noted in the SAP.

TABLE 7-1
SAMPLE PRESERVATION, HOLDING TIMES,
AND CONTAINER REQUIREMENTS
REMOVAL ACTION WORK PLAN
SAMPLING AND ANALYSIS PLAN
Exide Technologies
Vernon, California

ANALYSIS	MATRIX	CONTAINER	PRESERVATIVE	HOLDING TIME LIMIT
Title 22 Total Metals	Solid	4 oz jar	Cool ±4ºC	180 days (except mercury, 28 days)
Moisture content	Solid	4 oz jar	Cool ±4ºC	10 days
pH	Solid	4 oz jar	Cool ±4ºC	14 days
Sulfate	Solid	8 oz jar	Cool ±4ºC	28 days
TPH - Gasoline	Solid	4 oz jar	Cool ±4ºC	14 days
VOCs	Solid	Terra Core	Cool ±4ºC	14 days
SVOCs	Solid	8 oz jar	Cool ±4ºC	14 days to extraction, 40 days to analysis
Appendix IX VOCs	Aqueous	3 40 ml VOA vials	HCL, pH<2, cool ±4ºC	14 days
Appendix IX SVOCs	Aqueous	2 1-liter amber	Cool ±4ºC	7 days to extraction, 40 days to analysis
Appendix IX Metals	Aqueous	1 liter HDPE	HNO_3, Cool ±4ºC	180 days (except mercury, 28 days)
pH	Aqueous	500 ml HDPE	Cool ±4ºC	24 hr
Sulfate	Aqueous	500 ml HDPE	Cool ±4ºC	28 days

* Appendix IX parameter list shall exclude herbicides, pesticides, dioxins, and furans. Fioxins/furans will be analyzed in select samples as noted in the SAP.

TABLE 10-1
QA/QC SAMPLE SUMMARY
REMOVAL ACTION WORK PLAN
SAMPLING AND ANALYSIS PLAN
Exide Technologies
Vernon, California

QA/QC Sample Type	Frequency	Analysis
Field Duplicate	1 per 20 per event	Same as parent sample, see Table 3-1
Equipment Decontamination Blanks	1 per day	Analytes submitted for analysis on that day
Field Blank	1 per day when equipment decontamination blank is not collected	Analytes submitted for analysis on that day
Trip Blank	1 per cooler containing samples for VOC analysis	VOCs
Matrix Spike/Matrix Spike Duplicate	1 per 20 samples	Same as parent sample, see Table 3-1

FIGURES

FIGURE 1-1
ORGANIZATION CHART
SAMPLING AND ANALYSIS PLAN

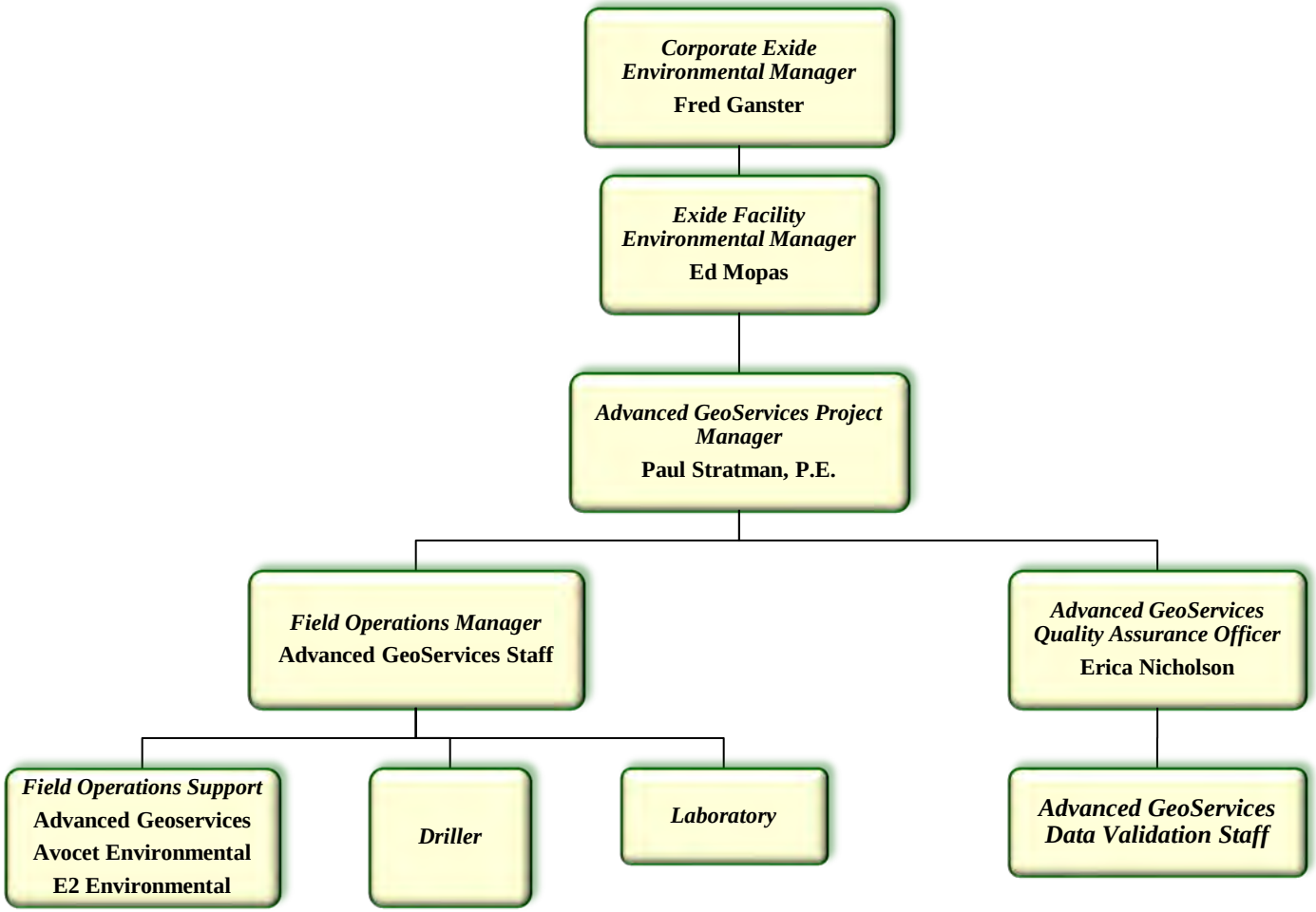

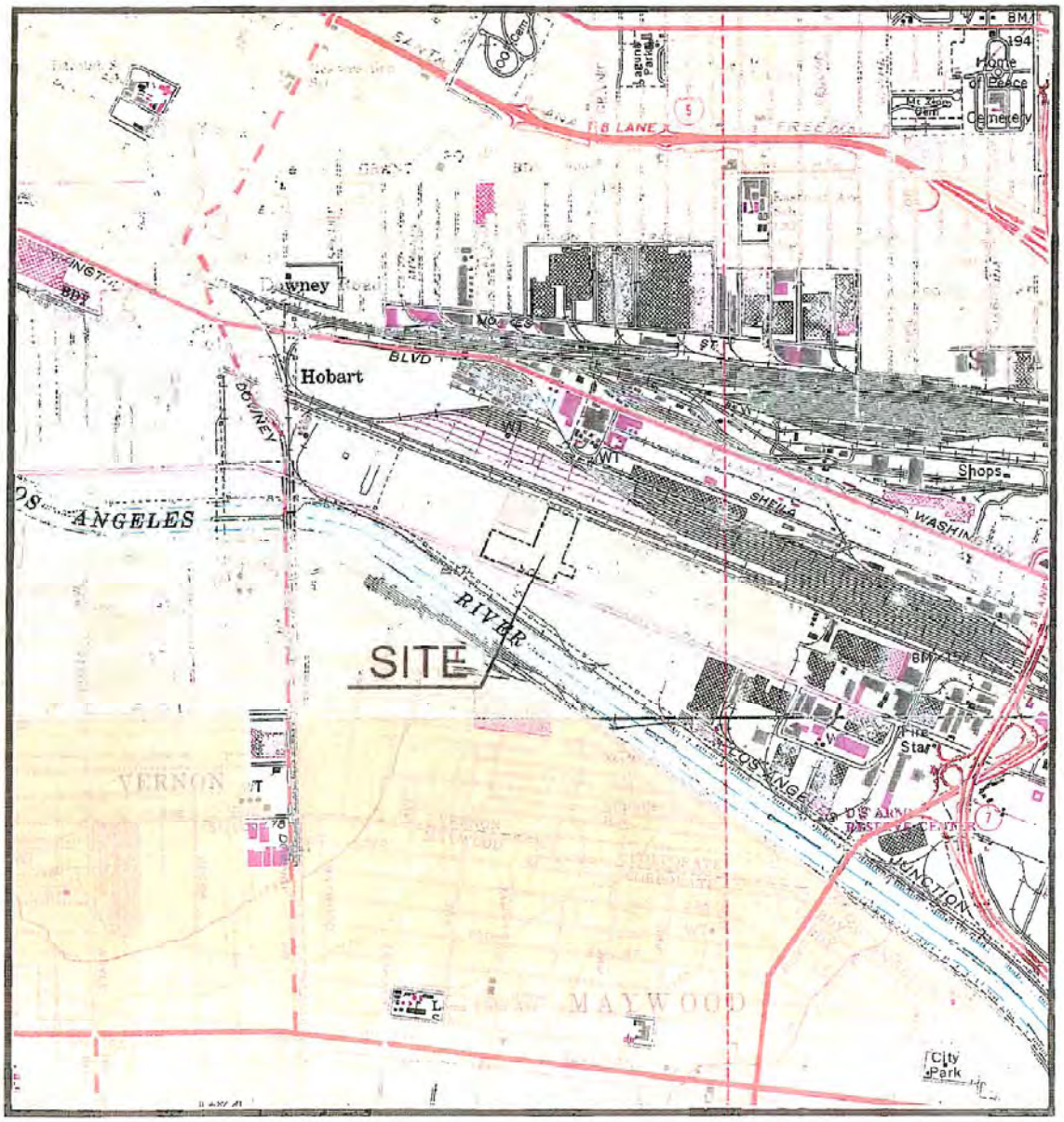

SCALE 1:24000

1 MILE

1000 0 1000 2000 3000 4000 5000 6000 7000 FEET

1 0.5 0 1 KILOMETER

QUADRANGLE LOCATION

Contour interval: 20 feet
Source: Composite of Los Angeles & South Gate, California, 7.5 Minute Series, U.S.G.S. Topographic Maps

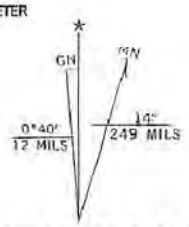

UTM GRID AND 1994 MAGNETIC NORTH DECLINATION AT CENTER OF SHEET

NOTE:

1. ADAPTED FROM LAKE ENGINEERING FIGURE 1.1 FROM PART B APPLICATION, MAY 2002.

ADVANCED GeoServices
Engineering for the Environment. Planning for People.™
1055 ANDREW DRIVE, SUITE A, WEST CHESTER PA, 19380
tel 610.840.9100 fax 610.840.9199 www.advancedgeoservices.com

FACILITY LOCATION MAP

EXIDE TECHNOLOGIES
VERNON, CALIFORNIA

SCALE:	N.T.S.	FIGURE
PROJECT NUMBER: 2013-2967-01		2-1
DATE:		

F:\Projects\2013\20132967 - Exide Vernon Interim Status Suspension\Cad\Figure 2-1.dwg, FIGURE 1-1

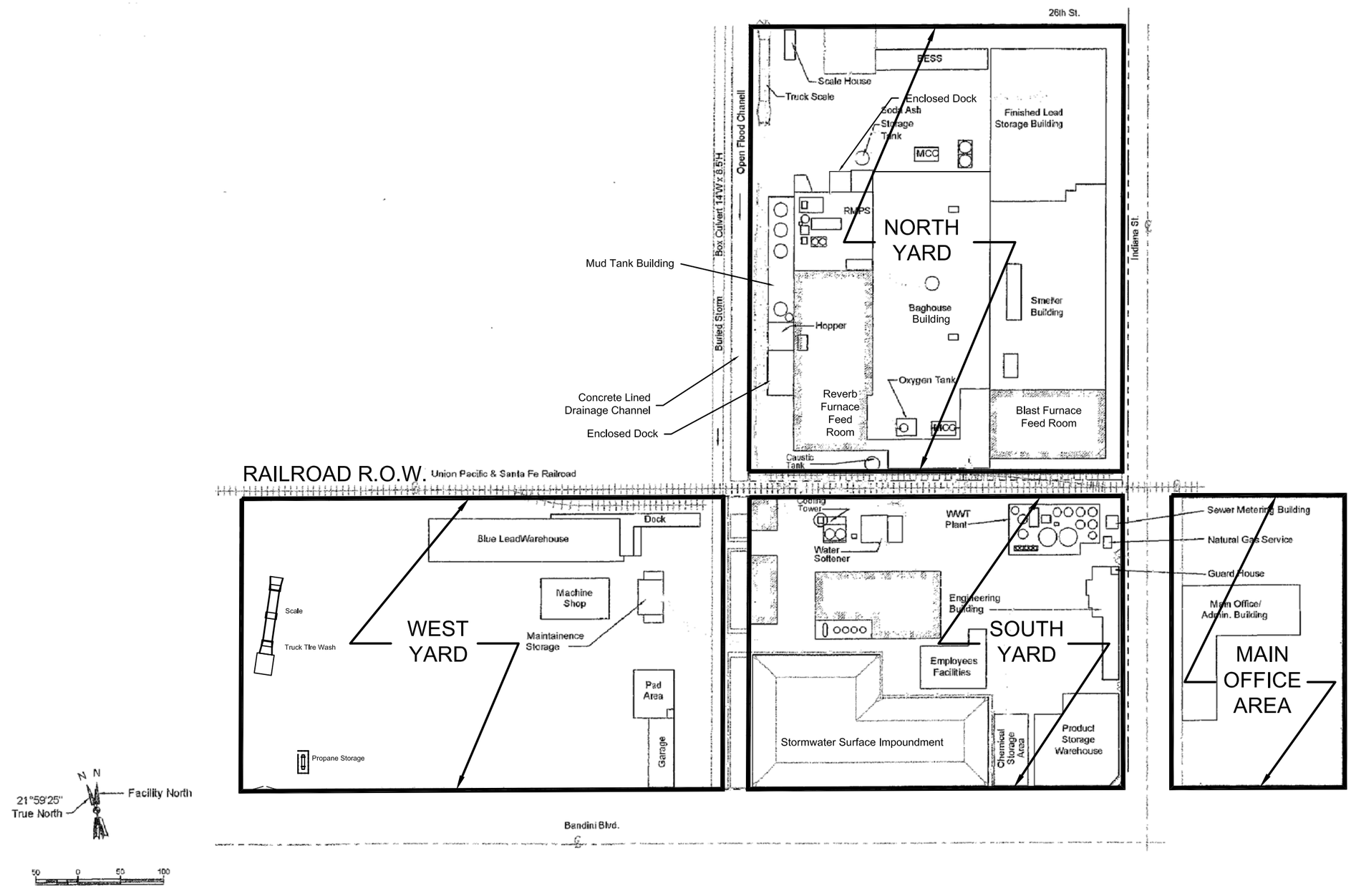

NOTE:

1. ADAPTED FROM LAKE ENGINEERING FIGURE 2.8 FROM PART B APPLICATION, MAY 2002.

ADVANCED GeoServices

Engineering for the Environment. Planning for People.™

1055 ANDREW DRIVE, SUITE A, WEST CHESTER PA, 19380
tel 610.840.9100 fax 610.840.9199 www.advancedgeoservices.com

GENERAL SITE LAYOUT

Exide Technologies
Vernon, California

SCALE:	N.T.S.	Figure
PROJECT NUMBER: 2013-2967-01		2-2
DATE:		

F:\Projects\2013\20132967 - Exide Vernon Interim Status Suspension\Cad\Figure 2-2.dwg, Figure 2-1

PLATE

DATE:	REVISION:
6-28-13	REVISED PER DTSC COMMENTS

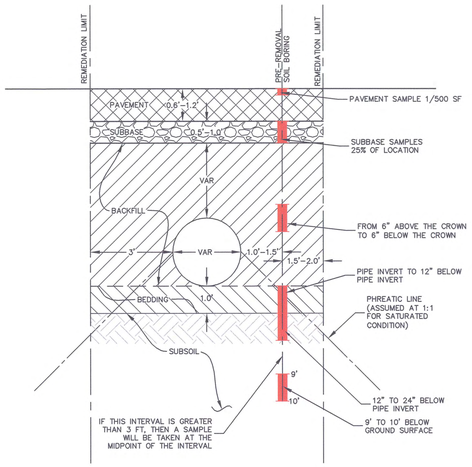

TYPICAL PIPE SAMPLING SCHEMATIC

NOT TO SCALE

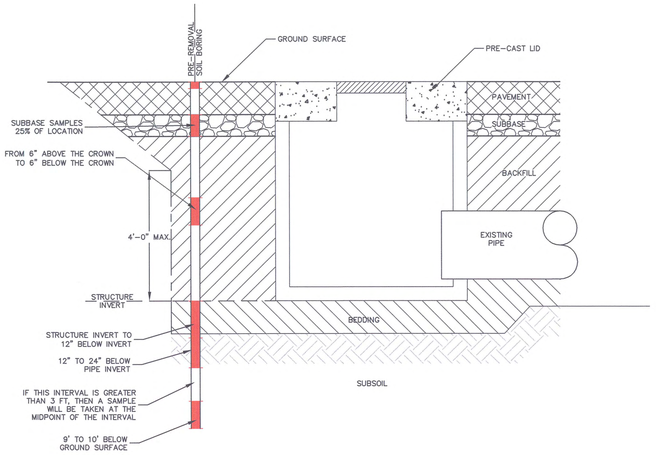

TYPICAL STRUCTURE SAMPLING SCHEMATIC

NOT TO SCALE

GRAPHIC SCALE

40 0 20 40 80 160

(IN FEET)
1 inch = 40 ft.

NOTES:

1. BASEMAP ADAPTED FROM MOLLENHAUER GROUP ALTA/ACSM LAND TITLE SURVEY DATED FEBRUARY 28, 2006.
2. FACILITY IMPROVEMENTS SINCE FEBRUARY 28, 2006 ARE NOT SHOWN OR ARE APPROXIMATE.
3. PIPE LOCATIONS, DIAMETERS, AND MATERIALS SHALL BE FIELD CONFIRMED.
4. STORMWATER MANAGEMENT SYSTEM INFORMATION SHOWN FROM FEBRUARY 28, 2006 MOLLENHAUER GROUP ALTA/ACSM LAND TITLE SURVEY; SEPTEMBER 15, 1983 SOUTH YARD PAVING PLAN, 39-000; NOVEMBER 7, 1980 SITE DEVELOPMENT PLOT PLAN, PLANT SITE PAVING AND DRAINAGE, DC-104; FEBRUARY 1998 NORTH YARD PLAN, DC-104-T; FEBRUARY 1998 SOUTH YARD PLAN, 39-724-100; FEBRUARY 1998 WEST YARD PLAN, 39-724-101 AND FIELD OBSERVATIONS PROVIDED BY EXIDE.
5. STORMWATER SYSTEM FIELD CONFIRMED BY ADVANCED GEOSERVICES TO EXTENT PRACTICAL ON SEPTEMBER 18, 2012.
6. * INDICATES ELEVATION CALCULATED USING DESIGN INVERT AND FIELD TG ELEVATION AND SUMP DEPTH.

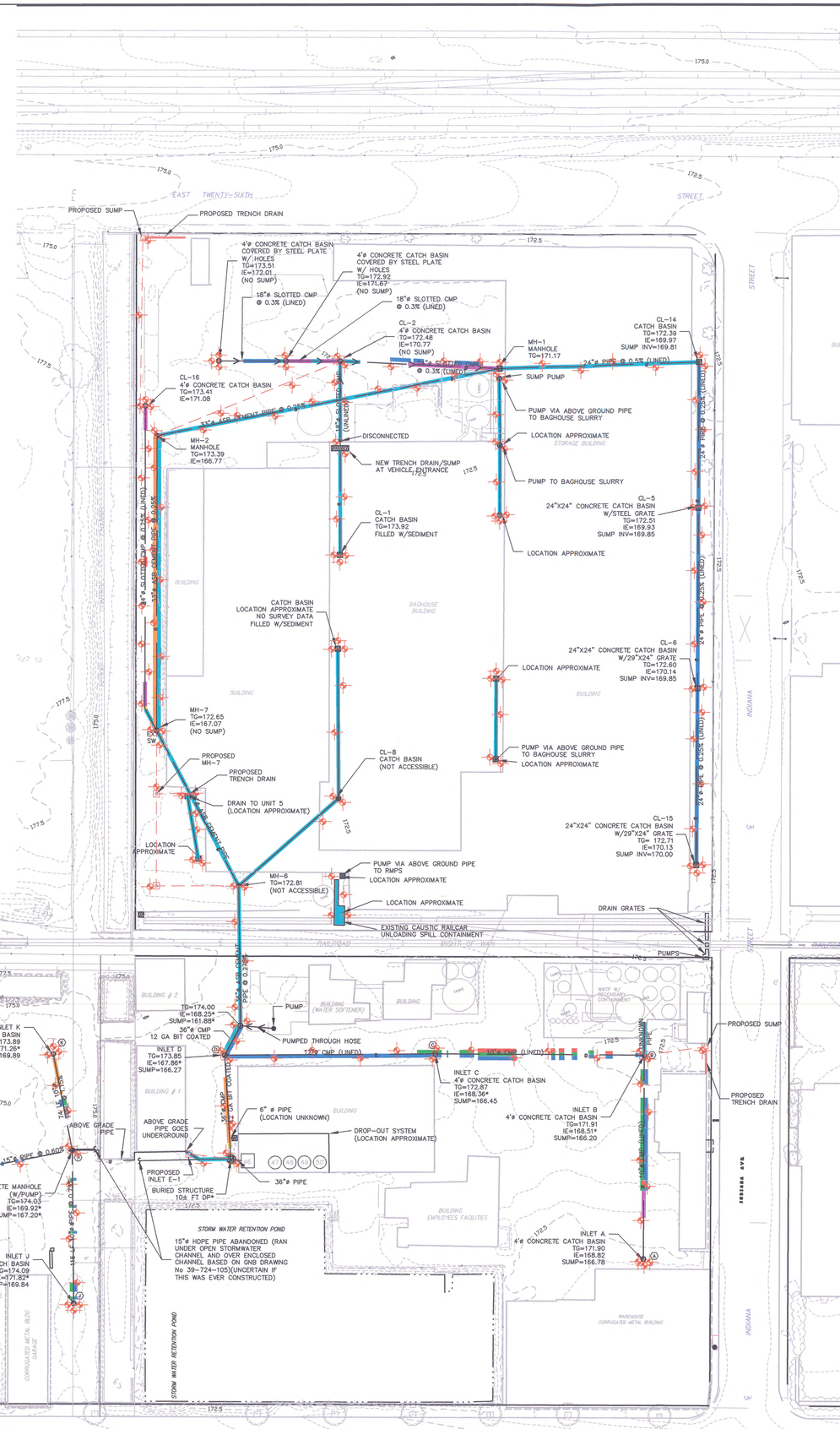

LEGEND:

- BLACKTOP
- BUILDING LINE
- CHAINLINK FENCE
- METAL FENCE
- CONTOURS
- RAIL ROAD
- STORM SEWER PIPE
- CATCH BASIN
- CATCH BASIN
- STORM SEWER MANHOLE W/SOLID LID
- PROPOSED INLET/MANHOLE
- PROPOSED SUMP

LEGEND FOR INSPECTION RESULTS:

- STANDING WATER (WITH SLUDGE OR DEBRIS)
- STANDING WATER ONLY
- BEND IN PIPE
- POSSIBLE PIPE DAMAGE
- SAG IN PIPE
- NOT SURVEYED/ABANDONED
- SOLID DEBRIS ONLY (SLUDGE, GRAVEL, CONCRETE)
- PROPOSED BORINGS
- REPLACEMENT SYSTEM ALIGNMENT

NOTE: BORINGS ARE TO BE LOCATED 1.5 FEET FROM THE OUTER WALL OF THE PIPE OR STRUCTURE. BORING LOCATIONS MAY NEED TO BE ADJUSTED TO AVOID UTILITIES, OFFSETS SHALL BE DOCUMENTED ON THE PLAN

ADVANCED GeoServices
Engineering for the Environment. Planning for People.™
1055 ANDREW DRIVE, SUITE A
WEST CHESTER, PENNSYLVANIA 19380

EXIDE TECHNOLOGIES
VERNON, CALIFORNIA

SAMPLING AND ANALYSIS PLAN

PROPOSED BORING LOCATIONS

REGISTERED PROFESSIONAL ENGINEER PAUL GERARD STAMPER NO. C61595 EXP. 6/30/13 CIVIL STATE OF CALIFORNIA

Scale:	1" = 40'
Originated By:	D.J.S.
Drawn By:	K.E.K.
Checked By:	J.W.D.
Project Mgr.:	P.G.S.
Project No.:	2013-2967
Sheet No.:	PLATE 1
Issued:	JUL 12 2013

ATTACHMENT A

USEPA Method 6200

METHOD 6200

FIELD PORTABLE X-RAY FLUORESCENCE SPECTROMETRY FOR THE DETERMINATION OF ELEMENTAL CONCENTRATIONS IN SOIL AND SEDIMENT

SW-846 is not intended to be an analytical training manual. Therefore, method procedures are written based on the assumption that they will be performed by analysts who are formally trained in at least the basic principles of chemical analysis and in the use of the subject technology.

In addition, SW-846 methods, with the exception of required method use for the analysis of method-defined parameters, are intended to be guidance methods which contain general information on how to perform an analytical procedure or technique which a laboratory can use as a basic starting point for generating its own detailed Standard Operating Procedure (SOP), either for its own general use or for a specific project application. The performance data included in this method are for guidance purposes only, and are not intended to be and must not be used as absolute QC acceptance criteria for purposes of laboratory accreditation.

1.0 SCOPE AND APPLICATION

1.1 This method is applicable to the in situ and intrusive analysis of the 26 analytes listed below for soil and sediment samples. Some common elements are not listed in this method because they are considered "light" elements that cannot be detected by field portable x-ray fluorescence (FPXRF). These light elements are: lithium, beryllium, sodium, magnesium, aluminum, silicon, and phosphorus. Most of the analytes listed below are of environmental concern, while a few others have interference effects or change the elemental composition of the matrix, affecting quantitation of the analytes of interest. Generally elements of atomic number 16 or greater can be detected and quantitated by FPXRF. The following RCRA analytes have been determined by this method:

Analytes	CAS Registry No.
Antimony (Sb)	7440-36-0
Arsenic (As)	7440-38-0
Barium (Ba)	7440-39-3
Cadmium (Cd)	7440-43-9
Chromium (Cr)	7440-47-3
Cobalt (Co)	7440-48-4
Copper (Cu)	7440-50-8
Lead (Pb)	7439-92-1
Mercury (Hg)	7439-97-6
Nickel (Ni)	7440-02-0
Selenium (Se)	7782-49-2
Silver (Ag)	7440-22-4
Thallium (Tl)	7440-28-0
Tin (Sn)	7440-31-5

Analytes	CAS Registry No.
Vanadium (V)	7440-62-2
Zinc (Zn)	7440-66-6

In addition, the following non-RCRA analytes have been determined by this method:

Analytes	CAS Registry No.
Calcium (Ca)	7440-70-2
Iron (Fe)	7439-89-6
Manganese (Mn)	7439-96-5
Molybdenum (Mo)	7439-93-7
Potassium (K)	7440-09-7
Rubidium (Rb)	7440-17-7
Strontium (Sr)	7440-24-6
Thorium (Th)	7440-29-1
Titanium (Ti)	7440-32-6
Zirconium (Zr)	7440-67-7

1.2 This method is a screening method to be used with confirmatory analysis using other techniques (e.g., flame atomic absorption spectrometry (FLAA), graphite furnance atomic absorption spectrometry (GFAA), inductively coupled plasma-atomic emission spectrometry, (ICP-AES), or inductively coupled plasma-mass spectrometry, (ICP-MS)). This method's main strength is that it is a rapid field screening procedure. The method's lower limits of detection are typically above the toxicity characteristic regulatory level for most RCRA analytes. However, when the obtainable values for precision, accuracy, and laboratory-established sensitivity of this method meet project-specific data quality objectives (DQOs), FPXRF is a fast, powerful, cost effective technology for site characterization.

1.3 The method sensitivity or lower limit of detection depends on several factors, including the analyte of interest, the type of detector used, the type of excitation source, the strength of the excitation source, count times used to irradiate the sample, physical matrix effects, chemical matrix effects, and interelement spectral interferences. Example lower limits of detection for analytes of interest in environmental applications are shown in Table 1. These limits apply to a clean spiked matrix of quartz sand (silicon dioxide) free of interelement spectral interferences using long (100 -600 second) count times. These sensitivity values are given for guidance only and may not always be achievable, since they will vary depending on the sample matrix, which instrument is used, and operating conditions. A discussion of performance-based sensitivity is presented in Sec. 9.6.

1.4 Analysts should consult the disclaimer statement at the front of the manual and the information in Chapter Two for guidance on the intended flexibility in the choice of methods, apparatus, materials, reagents, and supplies, and on the responsibilities of the analyst for demonstrating that the techniques employed are appropriate for the analytes of interest, in the matrix of interest, and at the levels of concern.

In addition, analysts and data users are advised that, except where explicitly specified in a regulation, the use of SW-846 methods is *not* mandatory in response to Federal testing requirements. The information contained in this method is provided by EPA as guidance to be used by the analyst and the regulated community in making judgments necessary to generate results that meet the data quality objectives for the intended application.

1.5 Use of this method is restricted to use by, or under supervision of, personnel appropriately experienced and trained in the use and operation of an XRF instrument. Each analyst must demonstrate the ability to generate acceptable results with this method.

2.0 SUMMARY OF METHOD

2.1 The FPXRF technologies described in this method use either sealed radioisotope sources or x-ray tubes to irradiate samples with x-rays. When a sample is irradiated with x-rays, the source x-rays may undergo either scattering or absorption by sample atoms. This latter process is known as the photoelectric effect. When an atom absorbs the source x-rays, the incident radiation dislodges electrons from the innermost shells of the atom, creating vacancies. The electron vacancies are filled by electrons cascading in from outer electron shells. Electrons in outer shells have higher energy states than inner shell electrons, and the outer shell electrons give off energy as they cascade down into the inner shell vacancies. This rearrangement of electrons results in emission of x-rays characteristic of the given atom. The emission of x-rays, in this manner, is termed x-ray fluorescence.

Three electron shells are generally involved in emission of x-rays during FPXRF analysis of environmental samples. The three electron shells include the K, L, and M shells. A typical emission pattern, also called an emission spectrum, for a given metal has multiple intensity peaks generated from the emission of K, L, or M shell electrons. The most commonly measured x-ray emissions are from the K and L shells; only metals with an atomic number greater than 57 have measurable M shell emissions.

Each characteristic x-ray line is defined with the letter K, L, or M, which signifies which shell had the original vacancy and by a subscript alpha (α), beta (β), or gamma (γ) etc., which indicates the higher shell from which electrons fell to fill the vacancy and produce the x-ray. For example, a K_α line is produced by a vacancy in the K shell filled by an L shell electron, whereas a K_β line is produced by a vacancy in the K shell filled by an M shell electron. The K_α transition is on average 6 to 7 times more probable than the K_β transition; therefore, the K_α line is approximately 7 times more intense than the K_β line for a given element, making the K_α line the choice for quantitation purposes.

The K lines for a given element are the most energetic lines and are the preferred lines for analysis. For a given atom, the x-rays emitted from L transitions are always less energetic than those emitted from K transitions. Unlike the K lines, the main L emission lines (L_α and L_β) for an element are of nearly equal intensity. The choice of one or the other depends on what interfering element lines might be present. The L emission lines are useful for analyses involving elements of atomic number (Z) 58 (cerium) through 92 (uranium).

An x-ray source can excite characteristic x-rays from an element only if the source energy is greater than the absorption edge energy for the particular line group of the element, that is, the K absorption edge, L absorption edge, or M absorption edge energy. The absorption edge energy is somewhat greater than the corresponding line energy. Actually, the K absorption edge energy is approximately the sum of the K, L, and M line energies of the particular element, and the L absorption edge energy is approximately the sum of the L and M line energies. FPXRF is more sensitive to an element with an absorption edge energy close to but less than

the excitation energy of the source. For example, when using a cadmium-109 source, which has an excitation energy of 22.1 kiloelectron volts (keV), FPXRF would exhibit better sensitivity for zirconium which has a K line energy of 15.77 keV than to chromium, which has a K line energy of 5.41 keV.

2.2 Under this method, inorganic analytes of interest are identified and quantitated using a field portable energy-dispersive x-ray fluorescence spectrometer. Radiation from one or more radioisotope sources or an electrically excited x-ray tube is used to generate characteristic x-ray emissions from elements in a sample. Up to three sources may be used to irradiate a sample. Each source emits a specific set of primary x-rays that excite a corresponding range of elements in a sample. When more than one source can excite the element of interest, the source is selected according to its excitation efficiency for the element of interest.

For measurement, the sample is positioned in front of the probe window. This can be done in two manners using FPXRF instruments, specifically, in situ or intrusive. If operated in the in situ mode, the probe window is placed in direct contact with the soil surface to be analyzed. When an FPXRF instrument is operated in the intrusive mode, a soil or sediment sample must be collected, prepared, and placed in a sample cup. The sample cup is then placed on top of the window inside a protective cover for analysis.

Sample analysis is then initiated by exposing the sample to primary radiation from the source. Fluorescent and backscattered x-rays from the sample enter through the detector window and are converted into electric pulses in the detector. The detector in FPXRF instruments is usually either a solid-state detector or a gas-filled proportional counter. Within the detector, energies of the characteristic x-rays are converted into a train of electric pulses, the amplitudes of which are linearly proportional to the energy of the x-rays. An electronic multichannel analyzer (MCA) measures the pulse amplitudes, which is the basis of qualitative x-ray analysis. The number of counts at a given energy per unit of time is representative of the element concentration in a sample and is the basis for quantitative analysis. Most FPXRF instruments are menu-driven from software built into the units or from personal computers (PC).

The measurement time of each source is user-selectable. Shorter source measurement times (30 seconds) are generally used for initial screening and hot spot delineation, and longer measurement times (up to 300 seconds) are typically used to meet higher precision and accuracy requirements.

FPXRF instruments can be calibrated using the following methods: internally using fundamental parameters determined by the manufacturer, empirically based on site-specific calibration standards (SSCS), or based on Compton peak ratios. The Compton peak is produced by backscattering of the source radiation. Some FPXRF instruments can be calibrated using multiple methods.

3.0 DEFINITIONS

3.1 FPXRF -- Field portable x-ray fluorescence.

3.2 MCA -- Multichannel analyzer for measuring pulse amplitude.

3.3 SSCS -- Site-specific calibration standards.

3.4 FP -- Fundamental parameter.

3.5 ROI -- Region of interest.

3.6 SRM -- Standard reference material; a standard containing certified amounts of metals in soil or sediment.

3.7 eV -- Electron volt; a unit of energy equivalent to the amount of energy gained by an electron passing through a potential difference of one volt.

3.8 Refer to Chapter One, Chapter Three, and the manufacturer's instructions for other definitions that may be relevant to this procedure.

4.0 INTERFERENCES

4.1 The total method error for FPXRF analysis is defined as the square root of the sum of squares of both instrument precision and user- or application-related error. Generally, instrument precision is the least significant source of error in FPXRF analysis. User- or application-related error is generally more significant and varies with each site and method used. Some sources of interference can be minimized or controlled by the instrument operator, but others cannot. Common sources of user- or application-related error are discussed below.

4.2 Physical matrix effects result from variations in the physical character of the sample. These variations may include such parameters as particle size, uniformity, homogeneity, and surface condition. For example, if any analyte exists in the form of very fine particles in a coarser-grained matrix, the analyte's concentration measured by the FPXRF will vary depending on how fine particles are distributed within the coarser-grained matrix. If the fine particles "settle" to the bottom of the sample cup (i.e., against the cup window), the analyte concentration measurement will be higher than if the fine particles are not mixed in well and stay on top of the coarser-grained particles in the sample cup. One way to reduce such error is to grind and sieve all soil samples to a uniform particle size thus reducing sample-to-sample particle size variability. Homogeneity is always a concern when dealing with soil samples. Every effort should be made to thoroughly mix and homogenize soil samples before analysis. Field studies have shown heterogeneity of the sample generally has the largest impact on comparability with confirmatory samples.

4.3 Moisture content may affect the accuracy of analysis of soil and sediment sample analyses. When the moisture content is between 5 and 20 percent, the overall error from moisture may be minimal. However, moisture content may be a major source of error when analyzing samples of surface soil or sediment that are saturated with water. This error can be minimized by drying the samples in a convection or toaster oven. Microwave drying is not recommended because field studies have shown that microwave drying can increase variability between FPXRF data and confirmatory analysis and because metal fragments in the sample can cause arcing to occur in a microwave.

4.4 Inconsistent positioning of samples in front of the probe window is a potential source of error because the x-ray signal decreases as the distance from the radioactive source increases. This error is minimized by maintaining the same distance between the window and each sample. For the best results, the window of the probe should be in direct contact with the sample, which means that the sample should be flat and smooth to provide a good contact surface.

4.5 Chemical matrix effects result from differences in the concentrations of interfering elements. These effects occur as either spectral interferences (peak overlaps) or as x-ray absorption and enhancement phenomena. Both effects are common in soils contaminated with heavy metals. As examples of absorption and enhancement effects; iron (Fe) tends to absorb copper (Cu) x-rays, reducing the intensity of the Cu measured by the detector, while chromium (Cr) will be enhanced at the expense of Fe because the absorption edge of Cr is slightly lower in energy than the fluorescent peak of iron. The effects can be corrected mathematically through the use of fundamental parameter (FP) coefficients. The effects also can be compensated for using SSCS, which contain all the elements present on site that can interfere with one another.

4.6 When present in a sample, certain x-ray lines from different elements can be very close in energy and, therefore, can cause interference by producing a severely overlapped spectrum. The degree to which a detector can resolve the two different peaks depends on the energy resolution of the detector. If the energy difference between the two peaks in electron volts is less than the resolution of the detector in electron volts, then the detector will not be able to fully resolve the peaks.

The most common spectrum overlaps involve the K_β line of element Z-1 with the K_α line of element Z. This is called the K_α/K_β interference. Because the K_α:K_β intensity ratio for a given element usually is about 7:1, the interfering element, Z-1, must be present at large concentrations to cause a problem. Two examples of this type of spectral interference involve the presence of large concentrations of vanadium (V) when attempting to measure Cr or the presence of large concentrations of Fe when attempting to measure cobalt (Co). The V K_α and K_β energies are 4.95 and 5.43 keV, respectively, and the Cr K_α energy is 5.41 keV. The Fe K_α and K_β energies are 6.40 and 7.06 keV, respectively, and the Co K_α energy is 6.92 keV. The difference between the V K_β and Cr K_α energies is 20 eV, and the difference between the Fe K_β and the Co K_α energies is 140 eV. The resolution of the highest-resolution detectors in FPXRF instruments is 170 eV. Therefore, large amounts of V and Fe will interfere with quantitation of Cr or Co, respectively. The presence of Fe is a frequent problem because it is often found in soils at tens of thousands of parts per million (ppm).

4.7 Other interferences can arise from K/L, K/M, and L/M line overlaps, although these overlaps are less common. Examples of such overlap involve arsenic (As) K_α/lead (Pb) L_α and sulfur (S) K_α/Pb M_α. In the As/Pb case, Pb can be measured from the Pb L_β line, and As can be measured from either the As K_α or the As K_β line; in this way the interference can be corrected. If the As K_β line is used, sensitivity will be decreased by a factor of two to five times because it is a less intense line than the As K_α line. If the As K_α line is used in the presence of Pb, mathematical corrections within the instrument software can be used to subtract out the Pb interference. However, because of the limits of mathematical corrections, As concentrations cannot be efficiently calculated for samples with Pb:As ratios of 10:1 or more. This high ratio of Pb to As may result in reporting of a "nondetect" or a "less than" value (e.g., <300 ppm) for As, regardless of the actual concentration present.

No instrument can fully compensate for this interference. It is important for an operator to understand this limitation of FPXRF instruments and consult with the manufacturer of the FPXRF instrument to evaluate options to minimize this limitation. The operator's decision will be based on action levels for metals in soil established for the site, matrix effects, capabilities of the instrument, data quality objectives, and the ratio of lead to arsenic known to be present at the site. If a site is encountered that contains lead at concentrations greater than ten times the concentration of arsenic it is advisable that all critical soil samples be sent off site for confirmatory analysis using other techniques (e.g., flame atomic absorption spectrometry (FLAA), graphite furnance atomic absorption spectrometry (GFAA), inductively coupled plasma-

atomic emission spectrometry, (ICP-AES), or inductively coupled plasma-mass spectrometry, (ICP-MS)).

4.8 If SSCS are used to calibrate an FPXRF instrument, the samples collected must be representative of the site under investigation. Representative soil sampling ensures that a sample or group of samples accurately reflects the concentrations of the contaminants of concern at a given time and location. Analytical results for representative samples reflect variations in the presence and concentration ranges of contaminants throughout a site. Variables affecting sample representativeness include differences in soil type, contaminant concentration variability, sample collection and preparation variability, and analytical variability, all of which should be minimized as much as possible.

4.9 Soil physical and chemical effects may be corrected using SSCS that have been analyzed by inductively coupled plasma (ICP) or atomic absorption (AA) methods. However, a major source of error can be introduced if these samples are not representative of the site or if the analytical error is large. Another concern is the type of digestion procedure used to prepare the soil samples for the reference analysis. Analytical results for the confirmatory method will vary depending on whether a partial digestion procedure, such as Method 3050, or a total digestion procedure, such as Method 3052, is used. It is known that depending on the nature of the soil or sediment, Method 3050 will achieve differing extraction efficiencies for different analytes of interest. The confirmatory method should meet the project-specific data quality objectives (DQOs).

XRF measures the total concentration of an element; therefore, to achieve the greatest comparability of this method with the reference method (reduced bias), a total digestion procedure should be used for sample preparation. However, in the study used to generate the performance data for this method (see Table 8), the confirmatory method used was Method 3050, and the FPXRF data compared very well with regression correlation coefficients (r often exceeding 0.95, except for barium and chromium). The critical factor is that the digestion procedure and analytical reference method used should meet the DQOs of the project and match the method used for confirmation analysis.

4.10 Ambient temperature changes can affect the gain of the amplifiers producing instrument drift. Gain or drift is primarily a function of the electronics (amplifier or preamplifier) and not the detector as most instrument detectors are cooled to a constant temperature. Most FPXRF instruments have a built-in automatic gain control. If the automatic gain control is allowed to make periodic adjustments, the instrument will compensate for the influence of temperature changes on its energy scale. If the FPXRF instrument has an automatic gain control function, the operator will not have to adjust the instrument's gain unless an error message appears. If an error message appears, the operator should follow the manufacturer's procedures for troubleshooting the problem. Often, this involves performing a new energy calibration. The performance of an energy calibration check to assess drift is a quality control measure discussed in Sec. 9.2.

If the operator is instructed by the manufacturer to manually conduct a gain check because of increasing or decreasing ambient temperature, it is standard to perform a gain check after every 10 to 20 sample measurements or once an hour whichever is more frequent. It is also suggested that a gain check be performed if the temperature fluctuates more than 10° F. The operator should follow the manufacturer's recommendations for gain check frequency.

5.0 SAFETY

5.1 This method does not address all safety issues associated with its use. The user is responsible for maintaining a safe work environment and a current awareness file of OSHA regulations regarding the safe handling of the chemicals listed in this method. A reference file of material safety data sheets (MSDSs) should be available to all personnel involved in these analyses.

NOTE: No MSDS applies directly to the radiation-producing instrument because that is covered under the Nuclear Regulatory Commission (NRC) or applicable state regulations.

5.2 Proper training for the safe operation of the instrument and radiation training should be completed by the analyst prior to analysis. Radiation safety for each specific instrument can be found in the operator's manual. Protective shielding should never be removed by the analyst or any personnel other than the manufacturer. The analyst should be aware of the local state and national regulations that pertain to the use of radiation-producing equipment and radioactive materials with which compliance is required. There should be a person appointed within the organization that is solely responsible for properly instructing all personnel, maintaining inspection records, and monitoring x-ray equipment at regular intervals.

Licenses for radioactive materials are of two types, specifically: (1) a general license which is usually initiated by the manufacturer for receiving, acquiring, owning, possessing, using, and transferring radioactive material incorporated in a device or equipment, and (2) a specific license which is issued to named persons for the operation of radioactive instruments as required by local, state, or federal agencies. A copy of the radioactive material license (for specific licenses only) and leak tests should be present with the instrument at all times and available to local and national authorities upon request.

X-ray tubes do not require radioactive material licenses or leak tests, but do require approvals and licenses which vary from state to state. In addition, fail-safe x-ray warning lights should be illuminated whenever an x-ray tube is energized. Provisions listed above concerning radiation safety regulations, shielding, training, and responsible personnel apply to x-ray tubes just as to radioactive sources. In addition, a log of the times and operating conditions should be kept whenever an x-ray tube is energized. An additional hazard present with x-ray tubes is the danger of electric shock from the high voltage supply, however, if the tube is properly positioned within the instrument, this is only a negligible risk. Any instrument (x-ray tube or radioisotope based) is capable of delivering an electric shock from the basic circuitry when the system is inappropriately opened.

5.3 Radiation monitoring equipment should be used with the handling and operation of the instrument. The operator and the surrounding environment should be monitored continually for analyst exposure to radiation. Thermal luminescent detectors (TLD) in the form of badges and rings are used to monitor operator radiation exposure. The TLDs or badges should be worn in the area of maximum exposure. The maximum permissible whole-body dose from occupational exposure is 5 Roentgen Equivalent Man (REM) per year. Possible exposure pathways for radiation to enter the body are ingestion, inhaling, and absorption. The best precaution to prevent radiation exposure is distance and shielding.

6.0 EQUIPMENT AND SUPPLIES

The mention of trade names or commercial products in this manual is for illustrative purposes only, and does not constitute an EPA endorsement or exclusive recommendation for

use. The products and instrument settings cited in SW-846 methods represent those products and settings used during method development or subsequently evaluated by the Agency. Glassware, reagents, supplies, equipment, and settings other than those listed in this manual may be employed provided that method performance appropriate for the intended application has been demonstrated and documented.

6.1 FPXRF spectrometer -- An FPXRF spectrometer consists of four major components: (1) a source that provides x-rays; (2) a sample presentation device; (3) a detector that converts x-ray-generated photons emitted from the sample into measurable electronic signals; and (4) a data processing unit that contains an emission or fluorescence energy analyzer, such as an MCA, that processes the signals into an x-ray energy spectrum from which elemental concentrations in the sample may be calculated, and a data display and storage system. These components and additional, optional items, are discussed below.

6.1.1 Excitation sources -- FPXRF instruments use either a sealed radioisotope source or an x-ray tube to provide the excitation source. Many FPXRF instruments use sealed radioisotope sources to produce x-rays in order to irradiate samples. The FPXRF instrument may contain between one and three radioisotope sources. Common radioisotope sources used for analysis for metals in soils are iron Fe-55 (^{55}Fe), cadmium Cd-109 (^{109}Cd), americium Am-241 (^{241}Am), and curium Cm-244 (^{244}Cm). These sources may be contained in a probe along with a window and the detector; the probe may be connected to a data reduction and handling system by means of a flexible cable. Alternatively, the sources, window, and detector may be included in the same unit as the data reduction and handling system.

The relative strength of the radioisotope sources is measured in units of millicuries (mCi). All other components of the FPXRF system being equal, the stronger the source, the greater the sensitivity and precision of a given instrument. Radioisotope sources undergo constant decay. In fact, it is this decay process that emits the primary x-rays used to excite samples for FPXRF analysis. The decay of radioisotopes is measured in "half-lives." The half-life of a radioisotope is defined as the length of time required to reduce the radioisotopes strength or activity by half. Developers of FPXRF technologies recommend source replacement at regular intervals based on the source's half-life. This is due to the ever increasing time required for the analysis rather than a decrease in instrument performance. The characteristic x-rays emitted from each of the different sources have energies capable of exciting a certain range of analytes in a sample. Table 2 summarizes the characteristics of four common radioisotope sources.

X-ray tubes have higher radiation output, no intrinsic lifetime limit, produce constant output over their lifetime, and do not have the disposal problems of radioactive sources but are just now appearing in FPXRF instruments. An electrically-excited x-ray tube operates by bombarding an anode with electrons accelerated by a high voltage. The electrons gain an energy in electron volts equal to the accelerating voltage and can excite atomic transitions in the anode, which then produces characteristic x-rays. These characteristic x-rays are emitted through a window which contains the vacuum necessary for the electron acceleration. An important difference between x-ray tubes and radioactive sources is that the electrons which bombard the anode also produce a continuum of x-rays across a broad range of energies in addition to the characteristic x-rays. This continuum is weak compared to the characteristic x-rays but can provide substantial excitation since it covers a broad energy range. It has the undesired property of producing background in the spectrum near the analyte x-ray lines when it is scattered by the sample. For this reason a filter is often used between the x-ray tube and the sample to suppress the continuum radiation while passing the characteristic x-rays from the anode. This filter is sometimes incorporated into the window of the x-ray tube. The choice of

accelerating voltage is governed both by the anode material, since the electrons must have sufficient energy to excite the anode, which requires a voltage greater than the absorption edge of the anode material and by the instrument's ability to cool the x-ray tube. The anode is most efficiently excited by voltages 2 to 2.5 times the edge energy (most x-rays per unit power to the tube), although voltages as low as 1.5 times the absorption edge energy will work. The characteristic x-rays emitted by the anode are capable of exciting a range of elements in the sample just as with a radioactive source. Table 3 gives the recommended operating voltages and the sample elements excited for some common anodes.

6.1.2 Sample presentation device -- FPXRF instruments can be operated in two modes: in situ and intrusive. If operated in the in situ mode, the probe window is placed in direct contact with the soil surface to be analyzed. When an FPXRF instrument is operated in the intrusive mode, a soil or sediment sample must be collected, prepared, and placed in a sample cup. For FPXRF instruments operated in the intrusive mode, the probe may be rotated so that the window faces either upward or downward. A protective sample cover is placed over the window, and the sample cup is placed on top of the window inside the protective sample cover for analysis.

6.1.3 Detectors -- The detectors in the FPXRF instruments can be either solid-state detectors or gas-filled, proportional counter detectors. Common solid-state detectors include mercuric iodide (HgI_2), silicon pin diode and lithium-drifted silicon Si(Li). The HgI_2 detector is operated at a moderately subambient temperature controlled by a low power thermoelectric cooler. The silicon pin diode detector also is cooled via the thermoelectric Peltier effect. The Si(Li) detector must be cooled to at least -90 °C either with liquid nitrogen or by thermoelectric cooling via the Peltier effect. Instruments with a Si(Li) detector have an internal liquid nitrogen dewar with a capacity of 0.5 to 1.0 L. Proportional counter detectors are rugged and lightweight, which are important features of a field portable detector. However, the resolution of a proportional counter detector is not as good as that of a solid-state detector. The energy resolution of a detector for characteristic x-rays is usually expressed in terms of full width at half-maximum (FWHM) height of the manganese K_α peak at 5.89 keV. The typical resolutions of the above mentioned detectors are as follows: HgI_2-270 eV; silicon pin diode-250 eV; Si(Li)–170 eV; and gas-filled, proportional counter-750 eV.

During operation of a solid-state detector, an x-ray photon strikes a biased, solid-state crystal and loses energy in the crystal by producing electron-hole pairs. The electric charge produced is collected and provides a current pulse that is directly proportional to the energy of the x-ray photon absorbed by the crystal of the detector. A gas-filled, proportional counter detector is an ionization chamber filled with a mixture of noble and other gases. An x-ray photon entering the chamber ionizes the gas atoms. The electric charge produced is collected and provides an electric signal that is directly proportional to the energy of the x-ray photon absorbed by the gas in the detector.

6.1.4 Data processing units -- The key component in the data processing unit of an FPXRF instrument is the MCA. The MCA receives pulses from the detector and sorts them by their amplitudes (energy level). The MCA counts pulses per second to determine the height of the peak in a spectrum, which is indicative of the target analyte's concentration. The spectrum of element peaks are built on the MCA. The MCAs in FPXRF instruments have from 256 to 2,048 channels. The concentrations of target analytes are usually shown in ppm on a liquid crystal display (LCD) in the instrument. FPXRF instruments can store both spectra and from 3,000 to 5,000 sets of numerical analytical results. Most FPXRF instruments are menu-driven from software built into the

units or from PCs. Once the data–storage memory of an FPXRF unit is full or at any other time, data can be downloaded by means of an RS-232 port and cable to a PC.

6.2 Spare battery and battery charger.

6.3 Polyethylene sample cups -- 31 to 40 mm in diameter with collar, or equivalent (appropriate for FPXRF instrument).

6.4 X-ray window film -- Mylar™, Kapton™, Spectrolene™, polypropylene, or equivalent; 2.5 to 6.0 µm thick.

6.5 Mortar and pestle -- Glass, agate, or aluminum oxide; for grinding soil and sediment samples.

6.6 Containers -- Glass or plastic to store samples.

6.7 Sieves -- 60-mesh (0.25 mm), stainless-steel, Nylon, or equivalent for preparing soil and sediment samples.

6.8 Trowels -- For smoothing soil surfaces and collecting soil samples.

6.9 Plastic bags -- Used for collection and homogenization of soil samples.

6.10 Drying oven -- Standard convection or toaster oven, for soil and sediment samples that require drying.

7.0 REAGENTS AND STANDARDS

7.1 Reagent grade chemicals must be used in all tests. Unless otherwise indicated, it is intended that all reagents conform to the specifications of the Committee on Analytical Reagents of the American Chemical Society, where such specifications are available. Other grades may be used, provided it is first ascertained that the reagent is of sufficiently high purity to permit its use without lessening the accuracy of the determination.

7.2 Pure element standards -- Each pure, single-element standard is intended to produce strong characteristic x-ray peaks of the element of interest only. Other elements present must not contribute to the fluorescence spectrum. A set of pure element standards for commonly sought analytes is supplied by the instrument manufacturer, if designated for the instrument; not all instruments require the pure element standards. The standards are used to set the region of interest (ROI) for each element. They also can be used as energy calibration and resolution check samples.

7.3 Site-specific calibration standards -- Instruments that employ fundamental parameters (FP) or similar mathematical models in minimizing matrix effects may not require SSCS. If the FP calibration model is to be optimized or if empirical calibration is necessary, then SSCSs must be collected, prepared, and analyzed.

7.3.1 The SSCS must be representative of the matrix to be analyzed by FPXRF. These samples must be well homogenized. A minimum of 10 samples spanning the concentration ranges of the analytes of interest and of the interfering elements must be obtained from the site. A sample size of 4 to 8 ounces is recommended, and standard glass sampling jars should be used.

7.3.2 Each sample should be oven-dried for 2 to 4 hr at a temperature of less than 150 °C. If mercury is to be analyzed, a separate sample portion should be dried at ambient temperature as heating may volatilize the mercury. When the sample is dry, all large, organic debris and nonrepresentative material, such as twigs, leaves, roots, insects, asphalt, and rock should be removed. The sample should be homogenized (see Sec. 7.3.3) and then a representative portion ground with a mortar and pestle or other mechanical means, prior to passing through a 60-mesh sieve. Only the coarse rock fraction should remain on the screen.

7.3.3 The sample should be homogenized by using a riffle splitter or by placing 150 to 200 g of the dried, sieved sample on a piece of kraft or butcher paper about 1.5 by 1.5 feet in size. Each corner of the paper should be lifted alternately, rolling the soil over on itself and toward the opposite corner. The soil should be rolled on itself 20 times. Approximately 5 g of the sample should then be removed and placed in a sample cup for FPXRF analysis. The rest of the prepared sample should be sent off site for ICP or AA analysis. The method use for confirmatory analysis should meet the data quality objectives of the project.

7.4 Blank samples -- The blank samples should be from a "clean" quartz or silicon dioxide matrix that is free of any analytes at concentrations above the established lower limit of detection. These samples are used to monitor for cross-contamination and laboratory-induced contaminants or interferences.

7.5 Standard reference materials -- Standard reference materials (SRMs) are standards containing certified amounts of metals in soil or sediment. These standards are used for accuracy and performance checks of FPXRF analyses. SRMs can be obtained from the National Institute of Standards and Technology (NIST), the U.S. Geological Survey (USGS), the Canadian National Research Council, and the national bureau of standards in foreign nations. Pertinent NIST SRMs for FPXRF analysis include 2704, Buffalo River Sediment; 2709, San Joaquin Soil; and 2710 and 2711, Montana Soil. These SRMs contain soil or sediment from actual sites that has been analyzed using independent inorganic analytical methods by many different laboratories. When these SRMs are unavailable, alternate standards may be used (e.g., NIST 2702).

8.0 SAMPLE COLLECTION, PRESERVATION, AND STORAGE

Sample handling and preservation procedures used in FPXRF analyses should follow the guidelines in Chapter Three, "Inorganic Analytes."

9.0 QUALITY CONTROL

9.1 Follow the manufacturer’s instructions for the quality control procedures specific to use of the testing product. Refer to Chapter One for additional guidance on quality assurance (QA) and quality control (QC) protocols. Any effort involving the collection of analytical data should include development of a structured and systematic planning document, such as a Quality Assurance Project Plan (QAPP) or a Sampling and Analysis Plan (SAP), which translates project objectives and specifications into directions for those that will implement the project and assess the results.

9.2 Energy calibration check -- To determine whether an FPXRF instrument is operating within resolution and stability tolerances, an energy calibration check should be run. The energy calibration check determines whether the characteristic x-ray lines are shifting,

which would indicate drift within the instrument. As discussed in Sec. 4.10, this check also serves as a gain check in the event that ambient temperatures are fluctuating greatly (more than 10 °F).

9.2.1 The energy calibration check should be run at a frequency consistent with manufacturer's recommendations. Generally, this would be at the beginning of each working day, after the batteries are changed or the instrument is shut off, at the end of each working day, and at any other time when the instrument operator believes that drift is occurring during analysis. A pure element such as iron, manganese, copper, or lead is often used for the energy calibration check. A manufacturer-recommended count time per source should be used for the check.

9.2.2 The instrument manufacturer's manual specifies the channel or kiloelectron volt level at which a pure element peak should appear and the expected intensity of the peak. The intensity and channel number of the pure element as measured using the source should be checked and compared to the manufacturer's recommendation. If the energy calibration check does not meet the manufacturer's criteria, then the pure element sample should be repositioned and reanalyzed. If the criteria are still not met, then an energy calibration should be performed as described in the manufacturer's manual. With some FPXRF instruments, once a spectrum is acquired from the energy calibration check, the peak can be optimized and realigned to the manufacturer's specifications using their software.

9.3 Blank samples -- Two types of blank samples should be analyzed for FPXRF analysis, specifically, instrument blanks and method blanks.

9.3.1 An instrument blank is used to verify that no contamination exists in the spectrometer or on the probe window. The instrument blank can be silicon dioxide, a polytetraflurorethylene (PTFE) block, a quartz block, "clean" sand, or lithium carbonate. This instrument blank should be analyzed on each working day before and after analyses are conducted and once per every twenty samples. An instrument blank should also be analyzed whenever contamination is suspected by the analyst. The frequency of analysis will vary with the data quality objectives of the project. A manufacturer-recommended count time per source should be used for the blank analysis. No element concentrations above the established lower limit of detection should be found in the instrument blank. If concentrations exceed these limits, then the probe window and the check sample should be checked for contamination. If contamination is not a problem, then the instrument must be "zeroed" by following the manufacturer's instructions.

9.3.2 A method blank is used to monitor for laboratory-induced contaminants or interferences. The method blank can be "clean" silica sand or lithium carbonate that undergoes the same preparation procedure as the samples. A method blank must be analyzed at least daily. The frequency of analysis will depend on the data quality objectives of the project. If the method blank does not contain the target analyte at a level that interferes with the project-specific data quality objectives then the method blank would be considered acceptable. In the absence of project-specific data quality objectives, if the blank is less than the lowest level of detection or less than 10% of the lowest sample concentration for the analyte, whichever is greater, then the method blank would be considered acceptable. If the method blank cannot be considered acceptable, the cause of the problem must be identified, and all samples analyzed with the method blank must be reanalyzed.

9.4 Calibration verification checks -- A calibration verification check sample is used to check the accuracy of the instrument and to assess the stability and consistency of the analysis for the analytes of interest. A check sample should be analyzed at the beginning of each working day, during active sample analyses, and at the end of each working day. The frequency of calibration checks during active analysis will depend on the data quality objectives of the project. The check sample should be a well characterized soil sample from the site that is representative of site samples in terms of particle size and degree of homogeneity and that contains contaminants at concentrations near the action levels. If a site-specific sample is not available, then an NIST or other SRM that contains the analytes of interest can be used to verify the accuracy of the instrument. The measured value for each target analyte should be within ±20 percent (%D) of the true value for the calibration verification check to be acceptable. If a measured value falls outside this range, then the check sample should be reanalyzed. If the value continues to fall outside the acceptance range, the instrument should be recalibrated, and the batch of samples analyzed before the unacceptable calibration verification check must be reanalyzed.

9.5 Precision measurements -- The precision of the method is monitored by analyzing a sample with low, moderate, or high concentrations of target analytes. The frequency of precision measurements will depend on the data quality objectives for the data. A minimum of one precision sample should be run per day. Each precision sample should be analyzed 7 times in replicate. It is recommended that precision measurements be obtained for samples with varying concentration ranges to assess the effect of concentration on method precision. Determining method precision for analytes at concentrations near the site action levels can be extremely important if the FPXRF results are to be used in an enforcement action; therefore, selection of at least one sample with target analyte concentrations at or near the site action levels or levels of concern is recommended. A precision sample is analyzed by the instrument for the same field analysis time as used for other project samples. The relative standard deviation (RSD) of the sample mean is used to assess method precision. For FPXRF data to be considered adequately precise, the RSD should not be greater than 20 percent with the exception of chromium. RSD values for chromium should not be greater than 30 percent. If both in situ and intrusive analytical techniques are used during the course of one day, it is recommended that separate precision calculations be performed for each analysis type.

The equation for calculating RSD is as follows:

$$RSD = (SD/\text{Mean Concentration}) \times 100$$

where:

RSD	=	Relative standard deviation for the precision measurement for the analyte
SD	=	Standard deviation of the concentration for the analyte
Mean concentration	=	Mean concentration for the analyte

The precision or reproducibility of a measurement will improve with increasing count time, however, increasing the count time by a factor of 4 will provide only 2 times better precision, so there is a point of diminishing return. Increasing the count time also improves the sensitivity, but decreases sample throughput.

9.6 The lower limits of detection should be established from actual measured performance based on spike recoveries in the matrix of concern or from acceptable method performance on a certified reference material of the appropriate matrix and within the appropriate calibration range for the application. This is considered the best estimate of the true method sensitivity as opposed to a statistical determination based on the standard deviation of

replicate analyses of a low-concentration sample. While the statistical approach demonstrates the potential data variability for a given sample matrix at one point in time, it does not represent what can be detected or most importantly the lowest concentration that can be calibrated. For this reason the sensitivity should be established as the lowest point of detection based on acceptable target analyte recovery in the desired sample matrix.

9.7 Confirmatory samples -- The comparability of the FPXRF analysis is determined by submitting FPXRF-analyzed samples for analysis at a laboratory. The method of confirmatory analysis must meet the project and XRF measurement data quality objectives. The confirmatory samples must be splits of the well homogenized sample material. In some cases the prepared sample cups can be submitted. A minimum of 1 sample for each 20 FPXRF-analyzed samples should be submitted for confirmatory analysis. This frequency will depend on project-specific data quality objectives. The confirmatory analyses can also be used to verify the quality of the FPXRF data. The confirmatory samples should be selected from the lower, middle, and upper range of concentrations measured by the FPXRF. They should also include samples with analyte concentrations at or near the site action levels. The results of the confirmatory analysis and FPXRF analyses should be evaluated with a least squares linear regression analysis. If the measured concentrations span more than one order of magnitude, the data should be log-transformed to standardize variance which is proportional to the magnitude of measurement. The correlation coefficient (r) for the results should be 0.7 or greater for the FPXRF data to be considered screening level data. If the r is 0.9 or greater and inferential statistics indicate the FPXRF data and the confirmatory data are statistically equivalent at a 99 percent confidence level, the data could potentially meet definitive level data criteria.

10.0 CALIBRATION AND STANDARDIZATION

10.1 Instrument calibration -- Instrument calibration procedures vary among FPXRF instruments. Users of this method should follow the calibration procedures outlined in the operator's manual for each specific FPXRF instrument. Generally, however, three types of calibration procedures exist for FPXRF instruments, namely: FP calibration, empirical calibration, and the Compton peak ratio or normalization method. These three types of calibration are discussed below.

10.2 Fundamental parameters calibration -- FP calibration procedures are extremely variable. An FP calibration provides the analyst with a "standardless" calibration. The advantages of FP calibrations over empirical calibrations include the following:

- No previously collected site-specific samples are necessary, although site-specific samples with confirmed and validated analytical results for all elements present could be used.

- Cost is reduced because fewer confirmatory laboratory results or calibration standards are necessary.

However, the analyst should be aware of the limitations imposed on FP calibration by particle size and matrix effects. These limitations can be minimized by adhering to the preparation procedure described in Sec. 7.3. The two FP calibration processes discussed below are based on an effective energy FP routine and a back scatter with FP (BFP) routine. Each FPXRF FP calibration process is based on a different iterative algorithmic method. The calibration procedure for each routine is explained in detail in the manufacturer's user manual for each FPXRF instrument; in addition, training courses are offered for each instrument.

10.2.1 Effective energy FP calibration -- The effective energy FP calibration is performed by the manufacturer before an instrument is sent to the analyst. Although SSCS can be used, the calibration relies on pure element standards or SRMs such as those obtained from NIST for the FP calibration. The effective energy routine relies on the spectrometer response to pure elements and FP iterative algorithms to compensate for various matrix effects.

Alpha coefficients are calculated using a variation of the Sherman equation, which calculates theoretical intensities from the measurement of pure element samples. These coefficients indicate the quantitative effect of each matrix element on an analyte's measured x-ray intensity. Next, the Lachance Traill algorithm is solved as a set of simultaneous equations based on the theoretical intensities. The alpha coefficients are then downloaded into the specific instrument.

The working effective energy FP calibration curve must be verified before sample analysis begins on each working day, after every 20 samples are analyzed, and at the end of sampling. This verification is performed by analyzing either an NIST SRM or an SSCS that is representative of the site-specific samples. This SRM or SSCS serves as a calibration check. A manufacturer-recommended count time per source should be used for the calibration check. The analyst must then adjust the y-intercept and slope of the calibration curve to best fit the known concentrations of target analytes in the SRM or SSCS.

A percent difference (%D) is then calculated for each target analyte. The %D should be within ±20 percent of the certified value for each analyte. If the %D falls outside this acceptance range, then the calibration curve should be adjusted by varying the slope of the line or the y-intercept value for the analyte. The SRM or SSCS is reanalyzed until the %D falls within ±20 percent. The group of 20 samples analyzed before an out-of-control calibration check should be reanalyzed.

The equation to calibrate %D is as follows:

$$\%D = ((C_s - C_k) / C_k) \times 100$$

where:

%D = Percent difference
C_k = Certified concentration of standard sample
C_s = Measured concentration of standard sample

10.2.2 BFP calibration -- BFP calibration relies on the ability of the liquid nitrogen-cooled, Si(Li) solid-state detector to separate the coherent (Compton) and incoherent (Rayleigh) backscatter peaks of primary radiation. These peak intensities are known to be a function of sample composition, and the ratio of the Compton to Rayleigh peak is a function of the mass absorption of the sample. The calibration procedure is explained in detail in the instrument manufacturer's manual. Following is a general description of the BFP calibration procedure.

The concentrations of all detected and quantified elements are entered into the computer software system. Certified element results for an NIST SRM or confirmed and validated results for an SSCS can be used. In addition, the concentrations of oxygen and silicon must be entered; these two concentrations are not found in standard metals analyses. The manufacturer provides silicon and oxygen concentrations for typical soil types. Pure element standards are then analyzed using a manufacturer-recommended

count time per source. The results are used to calculate correction factors in order to adjust for spectrum overlap of elements.

The working BFP calibration curve must be verified before sample analysis begins on each working day, after every 20 samples are analyzed, and at the end of the analysis. This verification is performed by analyzing either an NIST SRM or an SSCS that is representative of the site-specific samples. This SRM or SSCS serves as a calibration check. The standard sample is analyzed using a manufacturer-recommended count time per source to check the calibration curve. The analyst must then adjust the y-intercept and slope of the calibration curve to best fit the known concentrations of target analytes in the SRM or SSCS.

A %D is then calculated for each target analyte. The %D should fall within ±20 percent of the certified value for each analyte. If the %D falls outside this acceptance range, then the calibration curve should be adjusted by varying the slope of the line the y-intercept value for the analyte. The standard sample is reanalyzed until the %D falls within ±20 percent. The group of 20 samples analyzed before an out-of-control calibration check should be reanalyzed.

10.3 Empirical calibration -- An empirical calibration can be performed with SSCS, site-typical standards, or standards prepared from metal oxides. A discussion of SSCS is included in Sec. 7.3; if no previously characterized samples exist for a specific site, site-typical standards can be used. Site-typical standards may be selected from commercially available characterized soils or from SSCS prepared for another site. The site-typical standards should closely approximate the site's soil matrix with respect to particle size distribution, mineralogy, and contaminant analytes. If neither SSCS nor site-typical standards are available, it is possible to make gravimetric standards by adding metal oxides to a "clean" sand or silicon dioxide matrix that simulates soil. Metal oxides can be purchased from various chemical vendors. If standards are made on site, a balance capable of weighing items to at least two decimal places is necessary. Concentrated ICP or AA standard solutions can also be used to make standards. These solutions are available in concentrations of 10,000 parts per million, thus only small volumes have to be added to the soil.

An empirical calibration using SSCS involves analysis of SSCS by the FPXRF instrument and by a conventional analytical method such as ICP or AA. A total acid digestion procedure should be used by the laboratory for sample preparation. Generally, a minimum of 10 and a maximum of 30 well characterized SSCS, site-typical standards, or prepared metal oxide standards are necessary to perform an adequate empirical calibration. The exact number of standards depends on the number of analytes of interest and interfering elements. Theoretically, an empirical calibration with SSCS should provide the most accurate data for a site because the calibration compensates for site-specific matrix effects.

The first step in an empirical calibration is to analyze the pure element standards for the elements of interest. This enables the instrument to set channel limits for each element for spectral deconvolution. Next the SSCS, site-typical standards, or prepared metal oxide standards are analyzed using a count time of 200 seconds per source or a count time recommended by the manufacturer. This will produce a spectrum and net intensity of each analyte in each standard. The analyte concentrations for each standard are then entered into the instrument software; these concentrations are those obtained from the laboratory, the certified results, or the gravimetrically determined concentrations of the prepared standards. This gives the instrument analyte values to regress against corresponding intensities during the modeling stage. The regression equation correlates the concentrations of an analyte with its net intensity.

The calibration equation is developed using a least squares fit regression analysis. After the regression terms to be used in the equation are defined, a mathematical equation can be developed to calculate the analyte concentration in an unknown sample. In some FPXRF instruments, the software of the instrument calculates the regression equation. The software uses calculated intercept and slope values to form a multiterm equation. In conjunction with the software in the instrument, the operator can adjust the multiterm equation to minimize interelement interferences and optimize the intensity calibration curve.

It is possible to define up to six linear or nonlinear terms in the regression equation. Terms can be added and deleted to optimize the equation. The goal is to produce an equation with the smallest regression error and the highest correlation coefficient. These values are automatically computed by the software as the regression terms are added, deleted, or modified. It is also possible to delete data points from the regression line if these points are significant outliers or if they are heavily weighing the data. Once the regression equation has been selected for an analyte, the equation can be entered into the software for quantitation of analytes in subsequent samples. For an empirical calibration to be acceptable, the regression equation for a specific analyte should have a correlation coefficient of 0.98 or greater or meet the DQOs of the project.

In an empirical calibration, one must apply the DQOs of the project and ascertain critical or action levels for the analytes of interest. It is within these concentration ranges or around these action levels that the FPXRF instrument should be calibrated most accurately. It may not be possible to develop a good regression equation over several orders of analyte concentration.

10.4 Compton normalization method -- The Compton normalization method is based on analysis of a single, certified standard and normalization for the Compton peak. The Compton peak is produced from incoherent backscattering of x-ray radiation from the excitation source and is present in the spectrum of every sample. The Compton peak intensity changes with differing matrices. Generally, matrices dominated by lighter elements produce a larger Compton peak, and those dominated by heavier elements produce a smaller Compton peak. Normalizing to the Compton peak can reduce problems with varying matrix effects among samples. Compton normalization is similar to the use of internal standards in organics analysis. The Compton normalization method may not be effective when analyte concentrations exceed a few percent.

The certified standard used for this type of calibration could be an NIST SRM such as 2710 or 2711. The SRM must be a matrix similar to the samples and must contain the analytes of interests at concentrations near those expected in the samples. First, a response factor has to be determined for each analyte. This factor is calculated by dividing the net peak intensity by the analyte concentration. The net peak intensity is gross intensity corrected for baseline reading. Concentrations of analytes in samples are then determined by multiplying the baseline corrected analyte signal intensity by the normalization factor and by the response factor. The normalization factor is the quotient of the baseline corrected Compton K_α peak intensity of the SRM divided by that of the samples. Depending on the FPXRF instrument used, these calculations may be done manually or by the instrument software.

11.0 PROCEDURE

11.1 Operation of the various FPXRF instruments will vary according to the manufacturers' protocols. Before operating any FPXRF instrument, one should consult the manufacturer's manual. Most manufacturers recommend that their instruments be allowed to warm up for 15 to 30 minutes before analysis of samples. This will help alleviate drift or energy calibration problems later during analysis.

11.2 Each FPXRF instrument should be operated according to the manufacturer's recommendations. There are two modes in which FPXRF instruments can be operated: in situ and intrusive. The in situ mode involves analysis of an undisturbed soil sediment or sample. Intrusive analysis involves collection and preparation of a soil or sediment sample before analysis. Some FPXRF instruments can operate in both modes of analysis, while others are designed to operate in only one mode. The two modes of analysis are discussed below.

11.3 For in situ analysis, remove any large or nonrepresentative debris from the soil surface before analysis. This debris includes rocks, pebbles, leaves, vegetation, roots, and concrete. Also, the soil surface must be as smooth as possible so that the probe window will have good contact with the surface. This may require some leveling of the surface with a stainless-steel trowel. During the study conducted to provide example performance data for this method, this modest amount of sample preparation was found to take less than 5 min per sample location. The last requirement is that the soil or sediment not be saturated with water. Manufacturers state that their FPXRF instruments will perform adequately for soils with moisture contents of 5 to 20 percent but will not perform well for saturated soils, especially if ponded water exists on the surface. Another recommended technique for in situ analysis is to tamp the soil to increase soil density and compactness for better repeatability and representativeness. This condition is especially important for heavy element analysis, such as barium. Source count times for in situ analysis usually range from 30 to 120 seconds, but source count times will vary among instruments and depending on the desired method sensitivity. Due to the heterogeneous nature of the soil sample, in situ analysis can provide only “screening” type data.

11.4 For intrusive analysis of surface or sediment, it is recommended that a sample be collected from a 4- by 4-inch square that is 1 inch deep. This will produce a soil sample of approximately 375 g or 250 cm^3, which is enough soil to fill an 8-ounce jar. However, the exact dimensions and sample depth should take into consideration the heterogeneous deposition of contaminants and will ultimately depend on the desired project-specific data quality objectives. The sample should be homogenized, dried, and ground before analysis. The sample can be homogenized before or after drying. The homogenization technique to be used after drying is discussed in Sec. 4.2. If the sample is homogenized before drying, it should be thoroughly mixed in a beaker or similar container, or if the sample is moist and has a high clay content, it can be kneaded in a plastic bag. One way to monitor homogenization when the sample is kneaded in a plastic bag is to add sodium fluorescein dye to the sample. After the moist sample has been homogenized, it is examined under an ultraviolet light to assess the distribution of sodium fluorescein throughout the sample. If the fluorescent dye is evenly distributed in the sample, homogenization is considered complete; if the dye is not evenly distributed, mixing should continue until the sample has been thoroughly homogenized. During the study conducted to provide data for this method, the time necessary for homogenization procedure using the fluorescein dye ranged from 3 to 5 min per sample. As demonstrated in Secs. 13.5 and 13.7, homogenization has the greatest impact on the reduction of sampling variability. It produces little or no contamination. Often, the direct analysis through the plastic bag is possible without the more labor intensive steps of drying, grinding, and sieving given in Secs. 11.5 and 11.6. Of course, to achieve the best data quality possible all four steps should be followed.

11.5 Once the soil or sediment sample has been homogenized, it should be dried. This can be accomplished with a toaster oven or convection oven. A small aliquot of the sample (20 to 50 g) is placed in a suitable container for drying. The sample should be dried for 2 to 4 hr in the convection or toaster oven at a temperature not greater than 150 °C. Samples may also be air dried under ambient temperature conditions using a 10- to 20-g portion. Regardless of what drying mechanism is used, the drying process is considered complete when a constant sample weight can be obtained. Care should be taken to avoid sample cross-contamination and these measures can be evaluated by including an appropriate method blank sample along with any sample preparation process.

CAUTION: Microwave drying is not a recommended procedure. Field studies have shown that microwave drying can increase variability between the FPXRF data and confirmatory analysis. High levels of metals in a sample can cause arcing in the microwave oven, and sometimes slag forms in the sample. Microwave oven drying can also melt plastic containers used to hold the sample.

11.6 The homogenized dried sample material should be ground with a mortar and pestle and passed through a 60-mesh sieve to achieve a uniform particle size. Sample grinding should continue until at least 90 percent of the original sample passes through the sieve. The grinding step normally takes an average of 10 min per sample. An aliquot of the sieved sample should then be placed in a 31.0-mm polyethylene sample cup (or equivalent) for analysis. The sample cup should be one-half to three-quarters full at a minimum. The sample cup should be covered with a 2.5 µm Mylar (or equivalent) film for analysis. The rest of the soil sample should be placed in a jar, labeled, and archived for possible confirmation analysis. All equipment including the mortar, pestle, and sieves must be thoroughly cleaned so that any cross-contamination is below the established lower limit of detection of the procedure or DQOs of the analysis. If all recommended sample preparation steps are followed, there is a high probability the desired laboratory data quality may be obtained.

12.0 DATA ANALYSIS AND CALCULATIONS

Most FPXRF instruments have software capable of storing all analytical results and spectra. The results are displayed in ppm and can be downloaded to a personal computer, which can be used to provide a hard copy printout. Individual measurements that are smaller than three times their associated SD should not be used for quantitation. See the manufacturer's instructions regarding data analysis and calculations.

13.0 METHOD PERFORMANCE

13.1 Performance data and related information are provided in SW-846 methods only as examples and guidance. The data do not represent required performance criteria for users of the methods. Instead, performance criteria should be developed on a project-specific basis, and the laboratory should establish in-house QC performance criteria for the application of this method. These performance data are not intended to be and must not be used as absolute QC acceptance criteria for purposes of laboratory accreditation.

13.2 The sections to follow discuss three performance evaluation factors; namely, precision, accuracy, and comparability. The example data presented in Tables 4 through 8 were generated from results obtained from six FPXRF instruments (see Sec. 13.3). The soil samples analyzed by the six FPXRF instruments were collected from two sites in the United States. The soil samples contained several of the target analytes at concentrations ranging from "nondetect" to tens of thousands of mg/kg. These data are provided for guidance purposes only.

13.3 The six FPXRF instruments included the TN 9000 and TN Lead Analyzer manufactured by TN Spectrace; the X-MET 920 with a SiLi detector and X-MET 920 with a gas-filled proportional detector manufactured by Metorex, Inc.; the XL Spectrum Analyzer manufactured by Niton; and the MAP Spectrum Analyzer manufactured by Scitec. The TN 9000 and TN Lead Analyzer both have a HgI_2 detector. The TN 9000 utilized an Fe-55, Cd-109, and Am-241 source. The TN Lead Analyzer had only a Cd-109 source. The X-Met 920 with the SiLi detector had a Cd-109 and Am-241 source. The X-MET 920 with the gas-filled proportional detector had only a Cd-109 source. The XL Spectrum Analyzer utilized a silicon pin-diode

detector and a Cd-109 source. The MAP Spectrum Analyzer utilized a solid-state silicon detector and a Cd-109 source.

13.4 All example data presented in Tables 4 through 8 were generated using the following calibrations and source count times. The TN 9000 and TN Lead Analyzer were calibrated using fundamental parameters using NIST SRM 2710 as a calibration check sample. The TN 9000 was operated using 100, 60, and 60 second count times for the Cd-109, Fe-55, and Am-241 sources, respectively. The TN Lead analyzer was operated using a 60 second count time for the Cd-109 source. The X-MET 920 with the Si(Li) detector was calibrated using fundamental parameters and one well characterized site-specific soil standard as a calibration check. It used 140 and 100 second count times for the Cd-109 and Am-241 sources, respectively. The X-MET 920 with the gas-filled proportional detector was calibrated empirically using between 10 and 20 well characterized site-specific soil standards. It used 120 second times for the Cd-109 source. The XL Spectrum Analyzer utilized NIST SRM 2710 for calibration and the Compton peak normalization procedure for quantitation based on 60 second count times for the Cd-109 source. The MAP Spectrum Analyzer was internally calibrated by the manufacturer. The calibration was checked using a well-characterized site-specific soil standard. It used 240 second times for the Cd-109 source.

13.5 Precision measurements -- The example precision data are presented in Table 4. These data are provided for guidance purposes only. Each of the six FPXRF instruments performed 10 replicate measurements on 12 soil samples that had analyte concentrations ranging from "nondetects" to thousands of mg/kg. Each of the 12 soil samples underwent 4 different preparation techniques from in situ (no preparation) to dried and ground in a sample cup. Therefore, there were 48 precision data points for five of the instruments and 24 precision points for the MAP Spectrum Analyzer. The replicate measurements were taken using the source count times discussed at the beginning of this section.

For each detectable analyte in each precision sample a mean concentration, standard deviation, and RSD was calculated for each analyte. The data presented in Table 4 is an average RSD for the precision samples that had analyte concentrations at 5 to 10 times the lower limit of detection for that analyte for each instrument. Some analytes such as mercury, selenium, silver, and thorium were not detected in any of the precision samples so these analytes are not listed in Table 4. Some analytes such as cadmium, nickel, and tin were only detected at concentrations near the lower limit of detection so that an RSD value calculated at 5 to 10 times this limit was not possible.

One FPXRF instrument collected replicate measurements on an additional nine soil samples to provide a better assessment of the effect of sample preparation on precision. Table 5 shows these results. These data are provided for guidance purposes only. The additional nine soil samples were comprised of three from each texture and had analyte concentrations ranging from near the lower limit of detection for the FPXRF analyzer to thousands of mg/kg. The FPXRF analyzer only collected replicate measurements from three of the preparation methods; no measurements were collected from the in situ homogenized samples. The FPXRF analyzer conducted five replicate measurements of the in situ field samples by taking measurements at five different points within the 4-inch by 4-inch sample square. Ten replicate measurements were collected for both the intrusive undried and unground and intrusive dried and ground samples contained in cups. The cups were shaken between each replicate measurement.

Table 5 shows that the precision dramatically improved from the in situ to the intrusive measurements. In general there was a slight improvement in precision when the sample was dried and ground. Two factors caused the precision for the in situ measurements to be poorer. The major factor is soil heterogeneity. By moving the probe within the 4-inch by 4-inch square,

measurements of different soil samples were actually taking place within the square. Table 5 illustrates the dominant effect of soil heterogeneity. It overwhelmed instrument precision when the FPXRF analyzer was used in this mode. The second factor that caused the RSD values to be higher for the in situ measurements is the fact that only five instead of ten replicates were taken. A lesser number of measurements caused the standard deviation to be larger which in turn elevated the RSD values.

13.6 Accuracy measurements -- Five of the FPXRF instruments (not including the MAP Spectrum Analyzer) analyzed 18 SRMs using the source count times and calibration methods given at the beginning of this section. The 18 SRMs included 9 soil SRMs, 4 stream or river sediment SRMs, 2 sludge SRMs, and 3 ash SRMs. Each of the SRMs contained known concentrations of certain target analytes. A percent recovery was calculated for each analyte in each SRM for each FPXRF instrument. Table 6 presents a summary of this data. With the exception of cadmium, chromium, and nickel, the values presented in Table 6 were generated from the 13 soil and sediment SRMs only. The 2 sludge and 3 ash SRMs were included for cadmium, chromium, and nickel because of the low or nondetectable concentrations of these three analytes in the soil and sediment SRMs.

Only 12 analytes are presented in Table 6. These are the analytes that are of environmental concern and provided a significant number of detections in the SRMs for an accuracy assessment. No data is presented for the X-MET 920 with the gas-filled proportional detector. This FPXRF instrument was calibrated empirically using site-specific soil samples. The percent recovery values from this instrument were very sporadic and the data did not lend itself to presentation in Table 6.

Table 7 provides a more detailed summary of accuracy data for one particular FPXRF instrument (TN 9000) for the 9 soil SRMs and 4 sediment SRMs. These data are provided for guidance purposes only. Table 7 shows the certified value, measured value, and percent recovery for five analytes. These analytes were chosen because they are of environmental concern and were most prevalently certified for in the SRM and detected by the FPXRF instrument. The first nine SRMs are soil and the last 4 SRMs are sediment. Percent recoveries for the four NIST SRMs were often between 90 and 110 percent for all analytes.

13.7 Comparability -- Comparability refers to the confidence with which one data set can be compared to another. In this case, FPXRF data generated from a large study of six FPXRF instruments was compared to SW-846 Methods 3050 and 6010 which are the standard soil extraction for metals and analysis by inductively coupled plasma. An evaluation of comparability was conducted by using linear regression analysis. Three factors were determined using the linear regression. These factors were the y-intercept, the slope of the line, and the coefficient of determination (r^2).

As part of the comparability assessment, the effects of soil type and preparation methods were studied. Three soil types (textures) and four preparation methods were examined during the study. The preparation methods evaluated the cumulative effect of particle size, moisture, and homogenization on comparability. Due to the large volume of data produced during this study, linear regression data for six analytes from only one FPXRF instrument is presented in Table 8. Similar trends in the data were seen for all instruments. These data are provided for guidance purposes only.

Table 8 shows the regression parameters for the whole data set, broken out by soil type, and by preparation method. These data are provided for guidance purposes only. The soil types are as follows: soil 1--sand; soil 2--loam; and soil 3--silty clay. The preparation methods are as follows: preparation 1--in situ in the field; preparation 2--intrusive, sample collected and homogenized; preparation 3--intrusive, with sample in a sample cup but sample still wet and not

ground; and preparation 4–intrusive, with sample dried, ground, passed through a 40-mesh sieve, and placed in sample cup.

For arsenic, copper, lead, and zinc, the comparability to the confirmatory laboratory was excellent with r^2 values ranging from 0.80 to 0.99 for all six FPXRF instruments. The slopes of the regression lines for arsenic, copper, lead, and zinc, were generally between 0.90 and 1.00 indicating the data would need to be corrected very little or not at all to match the confirmatory laboratory data. The r^2 values and slopes of the regression lines for barium and chromium were not as good as for the other for analytes, indicating the data would have to be corrected to match the confirmatory laboratory.

Table 8 demonstrates that there was little effect of soil type on the regression parameters for any of the six analytes. The only exceptions were for barium in soil 1 and copper in soil 3. In both of these cases, however, it is actually a concentration effect and not a soil effect causing the poorer comparability. All barium and copper concentrations in soil 1 and 3, respectively, were less than 350 mg/kg.

Table 8 shows there was a preparation effect on the regression parameters for all six analytes. With the exception of chromium, the regression parameters were primarily improved going from preparation 1 to preparation 2. In this step, the sample was removed from the soil surface, all large debris was removed, and the sample was thoroughly homogenized. The additional two preparation methods did little to improve the regression parameters. This data indicates that homogenization is the most critical factor when comparing the results. It is essential that the sample sent to the confirmatory laboratory match the FPXRF sample as closely as possible.

Sec. 11.0 of this method discusses the time necessary for each of the sample preparation techniques. Based on the data quality objectives for the project, an analyst must decide if it is worth the extra time necessary to dry and grind the sample for small improvements in comparability. Homogenization requires 3 to 5 min. Drying the sample requires one to two hours. Grinding and sieving requires another 10 to 15 min per sample. Lastly, when grinding and sieving is conducted, time has to be allotted to decontaminate the mortars, pestles, and sieves. Drying and grinding the samples and decontamination procedures will often dictate that an extra person be on site so that the analyst can keep up with the sample collection crew. The cost of requiring an extra person on site to prepare samples must be balanced with the gain in data quality and sample throughput.

13.8 The following documents may provide additional guidance and insight on this method and technique:

13.8.1 A. D. Hewitt, "Screening for Metals by X-ray Fluorescence Spectrometry/Response Factor/Compton K_α Peak Normalization Analysis," American Environmental Laboratory, pp 24-32, 1994.

13.8.2 S. Piorek and J. R. Pasmore, "Standardless, In Situ Analysis of Metallic Contaminants in the Natural Environment With a PC-Based, High Resolution Portable X-Ray Analyzer," Third International Symposium on Field Screening Methods for Hazardous Waste and Toxic Chemicals, Las Vegas, Nevada, February 24-26, 1993, Vol 2, pp 1135-1151, 1993.

13.8.3 S. Shefsky, "Sample Handling Strategies for Accurate Lead-in-soil Measurements in the Field and Laboratory," *International Symposium of Field Screening Methods for Hazardous Waste and Toxic Chemicals*, Las Vegas, NV, January 29-31, 1997.

14.0 POLLUTION PREVENTION

14.1 Pollution prevention encompasses any technique that reduces or eliminates the quantity and/or toxicity of waste at the point of generation. Numerous opportunities for pollution prevention exist in laboratory operation. The EPA has established a preferred hierarchy of environmental management techniques that places pollution prevention as the management option of first choice. Whenever feasible, laboratory personnel should use pollution prevention techniques to address their waste generation. When wastes cannot be feasibly reduced at the source, the Agency recommends recycling as the next best option.

14.2 For information about pollution prevention that may be applicable to laboratories and research institutions consult *Less is Better: Laboratory Chemical Management for Waste Reduction* available from the American Chemical Society's Department of Government Relations and Science Policy, 1155 16th St., N.W. Washington, D.C. 20036, http://www.acs.org.

15.0 WASTE MANAGEMENT

The Environmental Protection Agency requires that laboratory waste management practices be conducted consistent with all applicable rules and regulations. The Agency urges laboratories to protect the air, water, and land by minimizing and controlling all releases from hoods and bench operations, complying with the letter and spirit of any sewer discharge permits and regulations, and by complying with all solid and hazardous waste regulations, particularly the hazardous waste identification rules and land disposal restrictions. For further information on waste management, consult *The Waste Management Manual for Laboratory Personnel* available from the American Chemical Society at the address listed in Sec. 14.2.

16.0 REFERENCES

1. Metorex, X-MET 920 User's Manual.

2. Spectrace Instruments, "Energy Dispersive X-ray Fluorescence Spectrometry: An Introduction," 1994.

3. TN Spectrace, Spectrace 9000 Field Portable/Benchtop XRF Training and Applications Manual.

4. Unpublished SITE data, received from PRC Environment Management, Inc.

17.0 TABLES, DIAGRAMS, FLOWCHARTS, AND VALIDATION DATA

The following pages contain the tables referenced by this method. A flow diagram of the procedure follows the tables.

TABLE 1

EXAMPLE INTERFERENCE FREE LOWER LIMITS OF DETECTION

Analyte	Chemical Abstract Series Number	Lower Limit of Detection in Quartz Sand (milligrams per kilogram)
Antimony (Sb)	7440-36-0	40
Arsenic (As)	7440-38-0	40
Barium (Ba)	7440-39-3	20
Cadmium (Cd)	7440-43-9	100
Calcium (Ca)	7440-70-2	70
Chromium (Cr)	7440-47-3	150
Cobalt (Co)	7440-48-4	60
Copper (Cu)	7440-50-8	50
Iron (Fe)	7439-89-6	60
Lead (Pb)	7439-92-1	20
Manganese (Mn)	7439-96-5	70
Mercury (Hg)	7439-97-6	30
Molybdenum (Mo)	7439-93-7	10
Nickel (Ni)	7440-02-0	50
Potassium (K)	7440-09-7	200
Rubidium (Rb)	7440-17-7	10
Selenium (Se)	7782-49-2	40
Silver (Ag)	7440-22-4	70
Strontium (Sr)	7440-24-6	10
Thallium (Tl)	7440-28-0	20
Thorium (Th)	7440-29-1	10
Tin (Sn)	7440-31-5	60
Titanium (Ti)	7440-32-6	50
Vanadium (V)	7440-62-2	50
Zinc (Zn)	7440-66-6	50
Zirconium (Zr)	7440-67-7	10

Source: Refs. 1, 2, and 3
These data are provided for guidance purposes only.

TABLE 2

SUMMARY OF RADIOISOTOPE SOURCE CHARACTERISTICS

Source	Activity (mCi)	Half-Life (Years)	Excitation Energy (keV)	Elemental Analysis Range	
Fe-55	20-50	2.7	5.9	Sulfur to Chromium Molybdenum to Barium	K Lines L Lines
Cd-109	5-30	1.3	22.1 and 87.9	Calcium to Rhodium Tantalum to Lead Barium to Uranium	K Lines K Lines L Lines
Am-241	5-30	432	26.4 and 59.6	Copper to Thulium Tungsten to Uranium	K Lines L Lines
Cm-244	60-100	17.8	14.2	Titanium to Selenium Lanthanum to Lead	K Lines L Lines

Source: Refs. 1, 2, and 3

TABLE 3

SUMMARY OF X-RAY TUBE SOURCE CHARACTERISTICS

Anode Material	Recommended Voltage Range (kV)	K-alpha Emission (keV)	Elemental Analysis Range	
Cu	18-22	8.04	Potassium to Cobalt Silver to Gadolinium	K Lines L Lines
Mo	40-50	17.4	Cobalt to Yttrium Europium to Radon	K Lines L Lines
Ag	50-65	22.1	Zinc to Technicium Ytterbium to Neptunium	K Lines L Lines

Source: Ref. 4

Notes: The sample elements excited are chosen by taking as the lower limit the same ratio of excitation line energy to element absorption edge as in Table 2 (approximately 0.45) and the requirement that the excitation line energy be above the element absorption edge as the upper limit (L2 edges used for L lines). K-beta excitation lines were ignored.

TABLE 4

EXAMPLE PRECISION VALUES

Analyte	Average Relative Standard Deviation for Each Instrument at 5 to 10 Times the Lower Limit of Detection					
	TN 9000	TN Lead Analyzer	X-MET 920 (SiLi Detector)	X-MET 920 (Gas-Filled Detector)	XL Spectrum Analyzer	MAP Spectrum Analyzer
Antimony	6.54	NR	NR	NR	NR	NR
Arsenic	5.33	4.11	3.23	1.91	12.47	6.68
Barium	4.02	NR	3.31	5.91	NR	NR
Cadmium	29.84[a]	NR	24.80[a]	NR	NR	NR
Calcium	2.16	NR	NR	NR	NR	NR
Chromium	22.25	25.78	22.72	3.91	30.25	NR
Cobalt	33.90	NR	NR	NR	NR	NR
Copper	7.03	9.11	8.49	9.12	12.77	14.86
Iron	1.78	1.67	1.55	NR	2.30	NR
Lead	6.45	5.93	5.05	7.56	6.97	12.16
Manganese	27.04	24.75	NR	NR	NR	NR
Molybdenum	6.95	NR	NR	NR	12.60	NR
Nickel	30.85[a]	NR	24.92[a]	20.92[a]	NA	NR
Potassium	3.90	NR	NR	NR	NR	NR
Rubidium	13.06	NR	NR	NR	32.69[a]	NR
Strontium	4.28	NR	NR	NR	8.86	NR
Tin	24.32[a]	NR	NR	NR	NR	NR
Titanium	4.87	NR	NR	NR	NR	NR
Zinc	7.27	7.48	4.26	2.28	10.95	0.83
Zirconium	3.58	NR	NR	NR	6.49	NR

These data are provided for guidance purposes only.
Source: Ref. 4

[a] These values are biased high because the concentration of these analytes in the soil samples was near the lower limit of detection for that particular FPXRF instrument.

NR Not reported.

NA Not applicable; analyte was reported but was below the established lower limit detection.

TABLE 5

EXAMPLES OF PRECISION AS AFFECTED BY SAMPLE PREPARATION

Analyte	Average Relative Standard Deviation for Each Preparation Method		
	In Situ-Field	Intrusive-Undried and Unground	Intrusive-Dried and Ground
Antimony	30.1	15.0	14.4
Arsenic	22.5	5.36	3.76
Barium	17.3	3.38	2.90
Cadmium[a]	41.2	30.8	28.3
Calcium	17.5	1.68	1.24
Chromium	17.6	28.5	21.9
Cobalt	28.4	31.1	28.4
Copper	26.4	10.2	7.90
Iron	10.3	1.67	1.57
Lead	25.1	8.55	6.03
Manganese	40.5	12.3	13.0
Mercury	ND	ND	ND
Molybdenum	21.6	20.1	19.2
Nickel[a]	29.8	20.4	18.2
Potassium	18.6	3.04	2.57
Rubidium	29.8	16.2	18.9
Selenium	ND	20.2	19.5
Silver[a]	31.9	31.0	29.2
Strontium	15.2	3.38	3.98
Thallium	39.0	16.0	19.5
Thorium	NR	NR	NR
Tin	ND	14.1	15.3
Titanium	13.3	4.15	3.74
Vanadium	NR	NR	NR
Zinc	26.6	13.3	11.1
Zirconium	20.2	5.63	5.18

These data are provided for guidance purposes only.
Source: Ref. 4

[a] These values may be biased high because the concentration of these analytes in the soil samples was near the lower limit of detection.

ND Not detected.

NR Not reported.

TABLE 6

EXAMPLE ACCURACY VALUES

Analyte	Instrument															
	TN 9000				TN Lead Analyzer				X-MET 920 (SiLi Detector)				XL Spectrum Analyzer			
	n	Range of % Rec.	Mean % Rec.	SD	n	Range of % Rec.	Mean % Rec.	SD	n	Range of % Rec.	Mean % Rec	SD	n	Range of % Rec.	Mean % Rec.	SD
Sb	2	100-149	124.3	NA	--	--	--	--	--	--	--	--	--	--	--	--
As	5	68-115	92.8	17.3	5	44-105	83.4	23.2	4	9.7-91	47.7	39.7	5	38-535	189.8	206
Ba	9	98-198	135.3	36.9	--	--	--	--	9	18-848	168.2	262	--	--	--	--
Cd	2	99-129	114.3	NA	--	--	--	--	6	81-202	110.5	45.7	--	--	--	--
Cr	2	99-178	138.4	NA	--	--	--	--	7	22-273	143.1	93.8	3	98-625	279.2	300
Cu	8	61-140	95.0	28.8	6	38-107	79.1	27.0	11	10-210	111.8	72.1	8	95-480	203.0	147
Fe	6	78-155	103.7	26.1	6	89-159	102.3	28.6	6	48-94	80.4	16.2	6	26-187	108.6	52.9
Pb	11	66-138	98.9	19.2	11	68-131	97.4	18.4	12	23-94	72.7	20.9	13	80-234	107.3	39.9
Mn	4	81-104	93.1	9.70	3	92-152	113.1	33.8	--	--	--	--	--	--	--	--
Ni	3	99-122	109.8	12.0	--	--	--	--	--	--	--	--	3	57-123	87.5	33.5
Sr	8	110-178	132.6	23.8	--	--	--	--	--	--	--	--	7	86-209	125.1	39.5
Zn	11	41-130	94.3	24.0	10	81-133	100.0	19.7	12	46-181	106.6	34.7	11	31-199	94.6	42.5

Source: Ref. 4. These data are provided for guidance purposes only.
n: Number of samples that contained a certified value for the analyte and produced a detectable concentration from the FPXRF instrument.
SD: Standard deviation; NA: Not applicable; only two data points, therefore, a SD was not calculated.
%Rec.: Percent recovery.
-- No data.

TABLE 7

EXAMPLE ACCURACY FOR TN 9000[a]

Standard Reference Material	Arsenic			Barium			Copper			Lead			Zinc		
	Cert. Conc.	Meas. Conc.	%Rec.	Cert. Conc.	Meas. Conc.	%Rec.	Cert. Conc.	Meas. Conc.	%Rec.	Cert. Conc.	Meas. Conc.	%Rec.	Cert. Conc.	Meas. Conc.	%Rec.
RTC CRM-021	24.8	ND	NA	586	1135	193.5	4792	2908	60.7	144742	149947	103.6	546	224	40.9
RTC CRM-020	397	429	92.5	22.3	ND	NA	753	583	77.4	5195	3444	66.3	3022	3916	129.6
BCR CRM 143R	--	--	--	--	--	--	131	105	80.5	180	206	114.8	1055	1043	99.0
BCR CRM 141	--	--	--	--	--	--	32.6	ND	NA	29.4	ND	NA	81.3	ND	NA
USGS GXR-2	25.0	ND	NA	2240	2946	131.5	76.0	106	140.2	690	742	107.6	530	596	112.4
USGS GXR-6	330	294	88.9	1300	2581	198.5	66.0	ND	NA	101	80.9	80.1	118	ND	NA
NIST 2711	105	104	99.3	726	801	110.3	114	ND	NA	1162	1172	100.9	350	333	94.9
NIST 2710	626	722	115.4	707	782	110.6	2950	2834	96.1	5532	5420	98.0	6952	6476	93.2
NIST 2709	17.7	ND	NA	968	950	98.1	34.6	ND	NA	18.9	ND	NA	106	98.5	93.0
NIST 2704	23.4	ND	NA	414	443	107.0	98.6	105	106.2	161	167	103.5	438	427	97.4
CNRC PACS-1	211	143	67.7	--	772	NA	452	302	66.9	404	332	82.3	824	611	74.2
SARM-51	--	--	--	335	466	139.1	268	373	139.2	5200	7199	138.4	2200	2676	121.6
SARM-52	--	--	--	410	527	128.5	219	193	88.1	1200	1107	92.2	264	215	81.4

Source: Ref. 4. These data are provided for guidance purposes only.
[a] All concentrations in milligrams per kilogram.
%Rec.: Percent recovery; ND: Not detected; NA: Not applicable.
-- No data.

TABLE 8

EXAMPLE REGRESSION PARAMETERS FOR COMPARABILITY[1]

	Arsenic				Barium				Copper			
	n	r^2	Int.	Slope	n	r^2	Int.	Slope	n	r^2	Int.	Slope
All Data	824	0.94	1.62	0.94	1255	0.71	60.3	0.54	984	0.93	2.19	0.93
Soil 1	368	0.96	1.41	0.95	393	0.05	42.6	0.11	385	0.94	1.26	0.99
Soil 2	453	0.94	1.51	0.96	462	0.56	30.2	0.66	463	0.92	2.09	0.95
Soil 3	—	—	—	—	400	0.85	44.7	0.59	136	0.46	16.60	0.57
Prep 1	207	0.87	2.69	0.85	312	0.64	53.7	0.55	256	0.87	3.89	0.87
Prep 2	208	0.97	1.38	0.95	315	0.67	64.6	0.52	246	0.96	2.04	0.93
Prep 3	204	0.96	1.20	0.99	315	0.78	64.6	0.53	236	0.97	1.45	0.99
Prep 4	205	0.96	1.45	0.98	313	0.81	58.9	0.55	246	0.96	1.99	0.96

	Lead				Zinc				Chromium			
	n	r^2	Int.	Slope	n	r^2	Int.	Slope	n	r^2	Int.	Slope
All Data	1205	0.92	1.66	0.95	1103	0.89	1.86	0.95	280	0.70	64.6	0.42
Soil 1	357	0.94	1.41	0.96	329	0.93	1.78	0.93	—	—	—	—
Soil 2	451	0.93	1.62	0.97	423	0.85	2.57	0.90	—	—	—	—
Soil 3	397	0.90	2.40	0.90	351	0.90	1.70	0.98	186	0.66	38.9	0.50
Prep 1	305	0.80	2.88	0.86	286	0.79	3.16	0.87	105	0.80	66.1	0.43
Prep 2	298	0.97	1.41	0.96	272	0.95	1.86	0.93	77	0.51	81.3	0.36
Prep 3	302	0.98	1.26	0.99	274	0.93	1.32	1.00	49	0.73	53.7	0.45
Prep 4	300	0.96	1.38	1.00	271	0.94	1.41	1.01	49	0.75	31.6	0.56

Source: Ref. 4. These data are provided for guidance purposes only.

[1] Log-transformed data

n: Number of data points; r^2: Coefficient of determination; Int.: Y-intercept

— No applicable data

FIELD PORTABLE X-RAY FLUORESCENCE SPECTROMETRY FOR THE DETERMINATION OF ELEMENTAL CONCENTRATIONS IN SOIL AND SEDIMENT

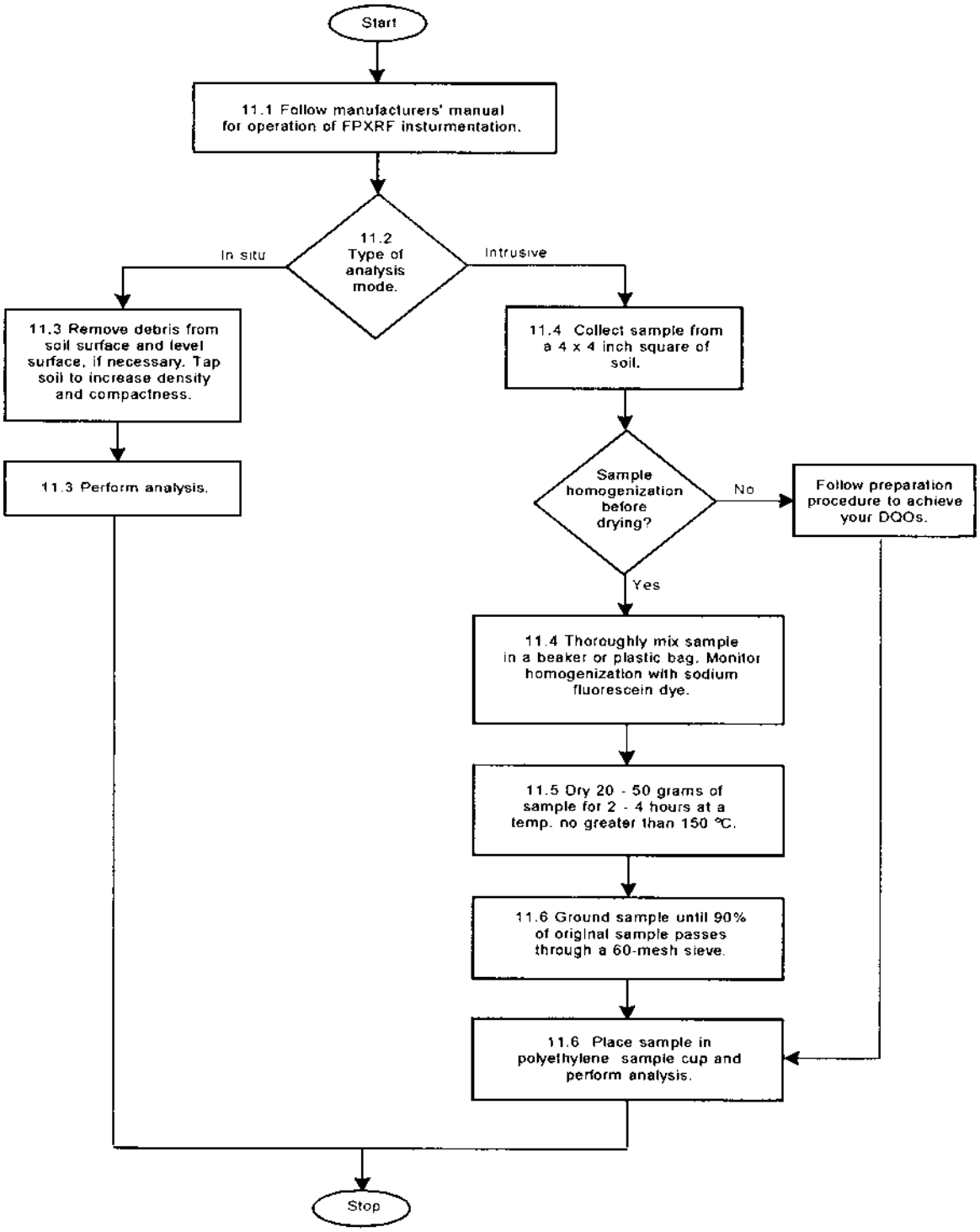

ATTACHMENT B

Calsciences' Quality Assurance Manual

UNCONTROLLED COPY

QUALITY SYSTEMS MANUAL FOR ENVIRONMENTAL ANALYTICAL SERVICES

Calscience Environmental Laboratories, Inc.

Version 3.0
July 2003

Prepared By

Calscience Environmental Laboratories, Inc.
7440 Lincoln Way
Garden Grove, CA 92841-1432
Telephone: (714) 895-5494
Facsimile: (714) 894-7501

Based On

National Environmental Laboratory Accreditation Program (NELAP)
Chapter 5 (Quality Systems)
NELAP Voted Version 14 – 29 June 2000

Michael J. Crisostomo
QUALITY ASSURANCE MANAGER

Virginia Huang
TECHNICAL DIRECTOR

Steven L. Lane
LABORATORY DIRECTOR

TABLE OF CONTENTS
QUALITY SYSTEMS MANUAL

PREFACE TO THE QUALITY SYSTEMS MANUAL 4
ACROYNM LIST 5
QUALITY SYSTEMS 6
1.0 SCOPE 6
2.0 REFERENCES 6
3.0 DEFINITIONS 6
4.0 ORGANIZATION AND MANAGEMENT 7
4.1 Legal Definition of Laboratory 7
4.2 Organization 7
5.0 QUALITY SYSTEM – ESTABLISHMENT, AUDITS, ESSENTIAL QUALITY CONTROLS, AND DATA VERIFICATION 8
5.1 Establishment 8
5.2 Quality Manual 9
5.3 Audits 23
5.3.1 Internal Audits 23
5.3.2 Managerial Review 23
5.3.3 Audit Review 24
5.3.4 Performance Audits 24
5.3.5 Corrective Actions 24
5.4 Essential Quality Control Procedures 25
6.0 PERSONNEL 25
6.1 General Requirements for Laboratory Staff 25
6.2 Laboratory Management Responsibilities 26
6.3 Records 27
7.0 PHYSICAL FACILITIES – ACCOMMODATION AND ENVIRONMENT 27
7.1 Environment 27
7.2 Work Areas 27
8.0 EQUIPMENT AND REFERENCE MATERIALS 28
9.0 MEASUREMENT TRACEABILITY AND CALIBRATION 29
9.1 General Requirements 29
9.2 Traceability of Calibration 29
9.3 Reference Standards 29
9.4 Calibration 29
9.4.1 Support Equipment 30
9.4.2 Instrument Calibration 30
10.0 TEST METHODS AND STANDARD OPERATING PROCEDURES 32
10.1 Methods Documentation 32
10.1.1 Standard Operating Procedures (SOPs) 32
10.1.2 Laboratory Method Manual(s) 33
10.2 Test Methods 33
10.2.1 Demonstration of Capability 34
10.3 Sample Aliquots 34
10.4 Data Verification 34
10.5 Documentation and Labeling of Standards and Reagents 35
10.6 Computers and Electronic Data Related Requirements 35
11.0 SAMPLE HANDLING, SAMPLE ACCEPTANCE POLICY AND SAMPLE RECEIPT 35
11.1 Sample Tracking 36
11.2 Sample Acceptance Policy 36
11.3 Sample Receipt Protocols 36
11.4 Storage Conditions 38
11.5 Sample Disposal 38
12.0 RECORDS 38
12.1 Record Keeping System and Design 39

12.2 Records Management and Storage 39
12.3 Laboratory Sample Tracking 40
12.3.1 Sample Handling 40
12.3.2 Laboratory Support Activities 40
12.3.3 Analytical Records 40
12.3.4 Administrative Records 41
13.0 LABORATORY REPORT FORMAT AND CONTENTS 41
14.0 SUBCONTRACTING ANALYTICAL SAMPLES 43
15.0 OUTSIDE SUPPORT SERVICES AND SUPPLIES 43
16.0 COMPLAINTS 43
APPENDIX B - GLOSSARY 48
APPENDIX C - DEMONSTRATION OF CAPABILITY 57
C.1 PROCEDURE FOR DEMONSTRATION OF CAPABILITY 57
C.2 CERTIFICATION STATEMENT 58
APPENDIX D - ESSENTIAL QUALITY CONTROL REQUIREMENTS 60
D.1 CHEMICAL TESTING 60

PREFACE TO THE QUALITY SYSTEMS MANUAL

Purpose

The purpose of this document is to provide implementation guidance on the establishment and management of quality systems for Calscience Environmental Laboratories, Inc and is based on the National Environmental Laboratory Accreditation Conference's (NELAC) Quality System requirements.

Background

To be accredited under the National Environmental Laboratory Accreditation Program (NELAP), laboratories shall have a comprehensive quality system in place, the requirements for which are outlined in NELAP Chapter 5 (Quality Systems).

Project Specific Requirements

Project-specific requirements or regulations may supersede requirements contained in this manual. The laboratory bears the responsibility for meeting all **State requirements**. Nothing in this document relieves any laboratory from complying with contract requirements or with **Federal, State, and/or local regulations**.

Results and Benefits

- **Standardization of Processes** – Because this manual will provide the laboratory with a comprehensive set of requirements that meet the needs of many clients, as well as NELAP, the laboratory may use it to create a standardized quality system. Ultimately, this standardization will save laboratory resources by establishing one set of consistent requirements for all environmental work. Primarily, the laboratory bears the responsibility for meeting all State requirements as outlined in their respective certification programs.

- **Deterrence of Improper, Unethical, or Illegal Actions** – Improper, unethical, or illegal activities committed by only a few laboratories have implications throughout the industry, with negative impacts on all laboratories. This manual establishes a minimum threshold program for all laboratories to use to deter and detect improper, unethical, or illegal actions.

- **Foundations for the Future** – A standardized approach to quality systems, shared by laboratories and the NELAP, paves the way for the standardization of other processes. For example, this manual might serve as a platform for a standardized strategy for Performance Based Measurement System (PBMS) implementation.

Document Format

Because the *Quality Systems Manual* is designed to complement and implement NELAP Chapter 5 (Quality Systems), that document serves as the primary text for this implementation manual. The section numbering has been changed from that of NELAP Chapter 5 as the manual is meant to be a stand-alone document. The number 5 has been eliminated from all section and subsection headings. However, second-level numbering has been retained to ensure maintenance of a parallel organization to the NELAC Quality Systems requirements. For instance, Section 5.4.2 in NELAP Chapter 5 (referencing Chapter 5 of the NELAC standards) is equivalent to Section 4.2 in this manual. In addition, there is one set of NELAC appendices.

ACROYNM LIST

°C: Degrees Celsius
ANSI/ASQC: American National Standards Institute/American Society for Quality Control
ASTM: American Society for Testing and Materials
CAS: Chemical Abstract Service
CCV: Continuing calibration verification
CFR: Code of Federal Regulations
CLP: Contract Laboratory Program
COC: Chain of custody
CV: Coefficient of variation
DO: Dissolved oxygen
DOC: Demonstration of capability
DQOs: Data quality objectives
EPA: Environmental Protection Agency
g/L: Grams per liter
GC/MS: Gas chromatography/mass spectrometry
ICP-MS: Inductively coupled plasma-mass spectrometer
ICV: Initial calibration verification
ID: Identifier
ISO/IEC: International Standards Organization/International Electrotechnical Commission
LCS: Laboratory control sample
LQMP: Laboratory Quality Management Plan
MDL: Method detection limit
mg/kg: Milligrams per kilogram
MS: Matrix spike
MSD: Matrix spike duplicate
NELAC: National Environmental Laboratory Accreditation Conference
NELAP: National Environmental Laboratory Accreditation Program
NIST: National Institute of Standards and Technology
OSHA: Occupational Safety and Health Administration
PBMS: Performance Based Measurement System
PC: Personal computer
PCBs: Polychlorinated biphenyls
PT: Proficiency testing
QA: Quality assurance
QAD: Quality Assurance Division (EPA)
QAMS: Quality Assurance Management Section
QAPP: Quality Assurance Project Plan
QC: Quality control
RL: Reporting limit
RPD: Relative percent difference
RSD: Relative standard deviation
SD: Serial dilutions
SOP: Standard operating procedure
TSS: Total suspended solids
UV: Ultraviolet
VOC: Volatile organic compound

QUALITY SYSTEMS

Quality Systems include all quality assurance (QA) policies and quality control (QC) procedures that are delineated in a Quality Manual and followed to ensure and document the quality of the analytical data. Calscience, accredited under the National Environmental Accreditation Program (NELAP), assures implementation of all QA policies and the applicable QC procedures specified in this Manual. The QA policies, which establish essential QC procedures, are applicable to all areas of Calscience, regardless of size and complexity.

The intent of this Chapter is to provide sufficient detail about quality management requirements so that all accrediting authorities evaluate laboratories consistently and uniformly.

NELAC is committed to the use of Performance Based Measurement Systems (PBMS) in environmental testing and provides the foundation for PBMS implementation in these standards. While this standard may not currently satisfy all the anticipated needs of PBMS, NELAC will address future needs within the context of State statutory and regulatory requirements and the finalized EPA implementation plans for PBMS.

Chapter 5 is organized according to the structure of ISO/IEC Guide 25, 1990. Where deemed necessary, specific areas within this Chapter may contain more information than specified by ISO/IEC Guide 25.

All items identified in this Manual shall be available for on-site inspection or data audit.

1.0 SCOPE

a) This Manual sets the general requirements that Calscience must successfully demonstrate to be recognized as competent to perform specific environmental tests.

b) This Manual includes additional requirements and information for assessing competence or for determining compliance by the organization or accrediting authority that grants approval.

   If more stringent standards or requirements are included in a mandated test method or by regulation, the laboratory demonstrates that such requirements are met. If it is not clear which requirements are more stringent, the standard from the method or regulation is to be followed. (See the supplemental accreditation requirements in Section 1.9.2 of NELAC.)

c) Calscience uses this Manual in the development and implementation of its quality systems. Accreditation authorities shall use this to assess the competence of environmental laboratories.

2.0 REFERENCES

See Appendix A.

3.0 DEFINITIONS

The relevant definitions from ISO/IEC Guide 2, ISO 8402, ANSI/ASQC E-4, 1994, the EPA "Glossary of Quality Assurance Terms and Acronyms," and the *International vocabulary of basic and general terms in metrology (VIM)* are applicable. The most relevant is quoted in Appendix A, Glossary, of Chapter 1 of NELAC, together with further definitions applicable for the purposes of this Standard.

4.0 ORGANIZATION AND MANAGEMENT

4.1 Legal Definition of Laboratory

Calscience is legally definable as evidenced by its business license, and current California Department of Health Services Environmental Laboratory Accreditation Program (CADHS ELAP) certificate. It is organized and operates in such a way that its facilities meet the requirements of the Standard. See the graphical presentations of the Organization and QA responsibility in Figures 4.1 and 4.2, respectively.

4.2 Organization

Calscience:

a) Has a managerial staff with the authority and resources necessary to discharge their duties;

b) Has processes to ensure that its personnel are free from any commercial, financial and other undue pressure that adversely affect the quality of their work;

c) Is organized in such a way that confidence in its independence of judgment and integrity is maintained at all times;

d) Specifies and documents the responsibility, authority, and interrelationship of all personnel who manage, perform or verify work affecting the quality of calibrations and tests;

   Such documentation includes:

   1) A clear description of the lines of responsibility in the laboratory, and is proportioned such that adequate supervision is ensured, and

   2) Job descriptions for all positions.

e) Provides supervision by persons familiar with the calibration or test methods and procedures, the objective of the calibration or test, and the assessment of the results.

   The ratio of supervisory to non-supervisory personnel ensures adequate supervision and adherence to laboratory procedures and accepted techniques.

f) Has a technical director who has overall responsibility for the technical operation of Calscience.

   The technical director certifies that personnel who perform the tests for which the laboratory is accredited have the appropriate educational and/or technical background. Such certification is documented.

   The technical director meets the requirements specified in the Accreditation Process. (See NELAC Section 4.1.1.1.)

g) Has a quality assurance manager who has responsibility for the quality system and its implementation.

   The quality assurance officer has direct access to the technical director and to the highest level of management at which decisions are made regarding laboratory policy or resources.

   The quality assurance manager (and/or his/her designees):

1) Serves as the focal point for QA/QC activities, and is responsible for the oversight and/or review of quality control data;

2) Has functions independent from laboratory operations for which she/he has quality assurance oversight;

3) Is able to evaluate data objectively and perform assessments without outside (e.g., managerial) influence;

4) Has documented training and/or experience in QA/QC procedures and is knowledgeable in the quality system, as defined under NELAC;

5) Has a general knowledge of the analytical test methods for which data review is performed;

6) Arranges for and conduct internal audits as per 5.3 annually; and

7) Notifies Calscience management of deficiencies in the quality system and monitors corrective action.

h) Nominates, by way of the "Alternates List," deputies in case of absence of the technical director and/or the quality assurance officer;

i) Calscience makes every effort to ensure the protection of its clients' information as confidential and proprietary.
   ii) Calscience is sensitive to the fact that much of the analytical work performed for clientele may be subject to litigatory processes. Calscience, therefore, holds all information in strict confidence with laboratory release only to the client.
   iii) Information released to entities other than the client is performed only upon written request from the client.
   iv) Due to the investigative nature of most site assessments, analytical information may become available to regulatory agencies or other evaluating entities during site assessment of the laboratory for the specific purpose of attaining laboratory certifications, accreditations, or evaluation of laboratory qualification for future work. During these occurrences, the laboratory will make every effort to maintain the confidence of client specific information.

j) For purposes of qualifying for and maintaining accreditation, participates in a proficiency test program as outlined in Chapter 2 of NELAC. Results of Calscience's performance in rounds of proficiency testing are available by request.

5.0 QUALITY SYSTEM – ESTABLISHMENT, AUDITS, ESSENTIAL QUALITY CONTROLS, AND DATA VERIFICATION

5.1 Establishment

Calscience establishes and maintains quality systems based on the required elements contained in this Manual and appropriate to the type, range and volume of environmental testing activities it undertakes.

a) The elements of this quality system are documented in this quality manual.

b) The quality documentation is available for use by all laboratory personnel.

c) The laboratory defines and documents its policies and objectives for, and its commitment to accepted laboratory practices and quality of testing services.

d) The laboratory management ensures that these policies and objectives are documented in the quality manual and are communicated to, understood and implemented by all laboratory personnel concerned.

   i. All staff members are issued a copy of the quality manual at the commencement of work at Calscience. Employees read and endorse the following statement when they receive their quality manual: "By signature below, I acknowledge that I have received a copy of Revision [number] of Calscience's Quality Assurance Program Manual dated [effective date of the subject manual]. Furthermore, I agree to read and abide by the policies contained therein."

   ii. A controlled copy of the quality manual is also available at the designated data reduction areas.

e) The quality manual is maintained current under the responsibility of the quality assurance officer. This manual is reviewed on an annual basis or more frequently, and revised as necessary. The review process begins in January of each year, and concludes on/before March of the same year. Where no revision is required, the manual is reissued in its entirety and review is scheduled for January of the following year.

5.2 Quality Manual

This quality manual and related quality documentation state Calscience's policies and operational procedures established in order to meet the requirements of this Standard.

This Manual lists on the title page: a document title; the laboratory's full name and address; the name, address, and telephone number of individuals responsible for the laboratory; the name of the quality assurance manager; the identification of all major organizational units that are covered by this quality manual and the effective date of the version.

This quality manual and related quality documentation also contains:

a) A quality policy statement, including objectives and commitments, by top management;

   i. Calscience Environmental Laboratories, Inc. (Calscience) is committed to providing the highest quality environmental analytical services available. To ensure the production of scientifically sound, legally defensible data of known and proven quality, an extensive Quality Assurance program has been developed and implemented. This document, Calscience's Quality Assurance Program Manual, presents an overview of the essential elements of our Quality Assurance program. Calscience has modeled this manual after EPA guidelines as outlined in "Interim Guidelines and Specifications for Preparing Quality Assurance Project Plans", Office of Monitoring Systems and Quality Assurance, Office of Research and Development, U.S. EPA, EPA-600/4-83-004, February, 1983. Calscience's QA Program is closely monitored at the Corporate, Divisional, and Group levels, and relies on clearly defined objectives, well-documented procedures, a comprehensive quality assurance/quality control system, and management support for its effectiveness.

   ii. This QA Program Manual is designed to control and monitor the quality of data generated at Calscience. The essential elements described herein are geared toward generating data that is in compliance with federal regulatory requirements specified under the Clean Water Act, the Safe Drinking Water Act, the Resource Conservation and Recovery Act, the Comprehensive Environmental Response, Compensation, and Liability Act, and applicable amendments, and state and DoD/DoE equivalents. Although the quality control requirements of these various programs are not completely consistent, each of the programs base data quality judgments on the following

three types of information, the operational elements of each being described elsewhere in this manual.

- ⇨ Data which indicates the overall qualifications of the laboratory to perform environmental analyses;
- ⇨ Data which measures the laboratory's daily performance using a specific method; and
- ⇨ Data which measures the effect of a specific matrix on the performance of a method.

iii. It is important to note that the QA guidelines presented herein will always apply unless adherence to specific Quality Assurance Project Plans (QAPPs) or client and/or regulatory agency specific requirements are directed. In these cases, the elements contained within specified direction or documentation shall supersede that contained herein.

iv. This manual is a living document subject to periodic modifications to comply with regulatory changes and technological advancements. All previous versions of this document are obsolete. Users are urged to contact Calscience to verify the current revision of this document.

b) The organization and management structure of the laboratory, its place in any parent organization and relevant organizational charts;

See Figure 4.1 Organizational Chart, and Figure 4.2 QA Responsibility Chart.

c) The relationship between management, technical operations, support services and the quality system;

d) Procedures to ensure that all records required under the NELAP are retained, as well as procedures for control and maintenance of documentation through a document control system which ensures that all standard operating procedures, manuals, or documents clearly indicate the time period during which the procedure or document was in force;

i. Ensuring a high quality work product in the environmental laboratory not only requires adherence to the quality issues discussed in the previous sections, but also requires the ability to effectively archive, restore, and protect the records that are generated.

ii. Procedures are in place to ensure that all records are retained. In addition, a documentation control system is employed to clearly indicate the time period during which a standard operating procedure, manual, or document was in force. These procedures are outlined in the laboratory standard operating procedure SOP-T002.

iii. All laboratory logbooks, instrument response printouts, completed analytical reports, chain-of-custodies, and laboratory support documentation are stored for a minimum of five years. Project specific data are stored in sequentially numbered project files and include copies of the applicable laboratory logbooks, instrument response printouts, completed analytical reports, chain-of-custodies, and any other pertinent supporting documentation.

iv. When complete, the project specific data are high speed optically scanned and transformed into digital CD media. Additional copies of these records are created at the time of scanning and are stored off-site for protection of the data. These records are stored for a minimum of five years.

FIGURE 1: ORGANIZATIONAL CHART

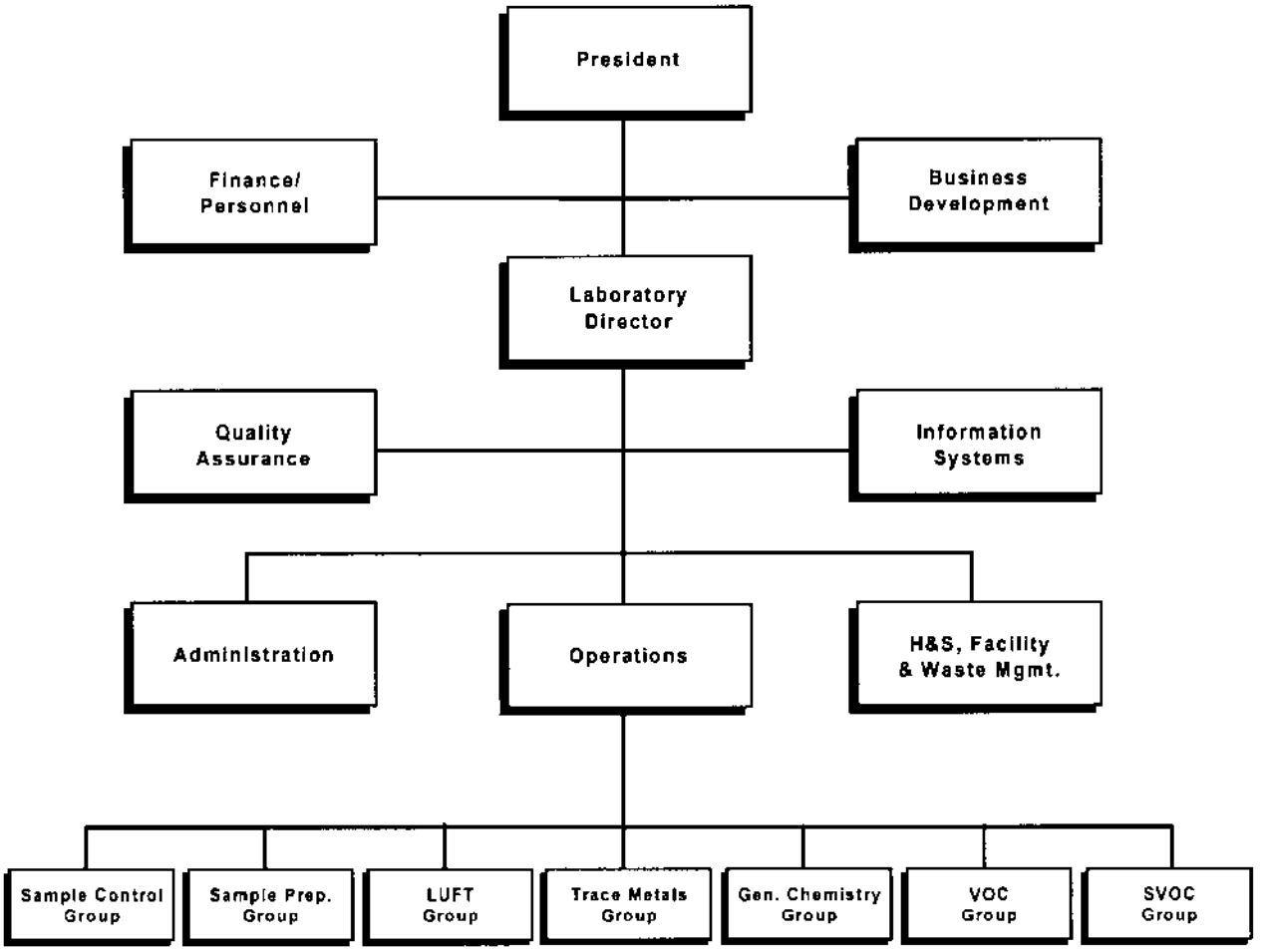

FIGURE 2: QA RESPONSIBILITY CHART

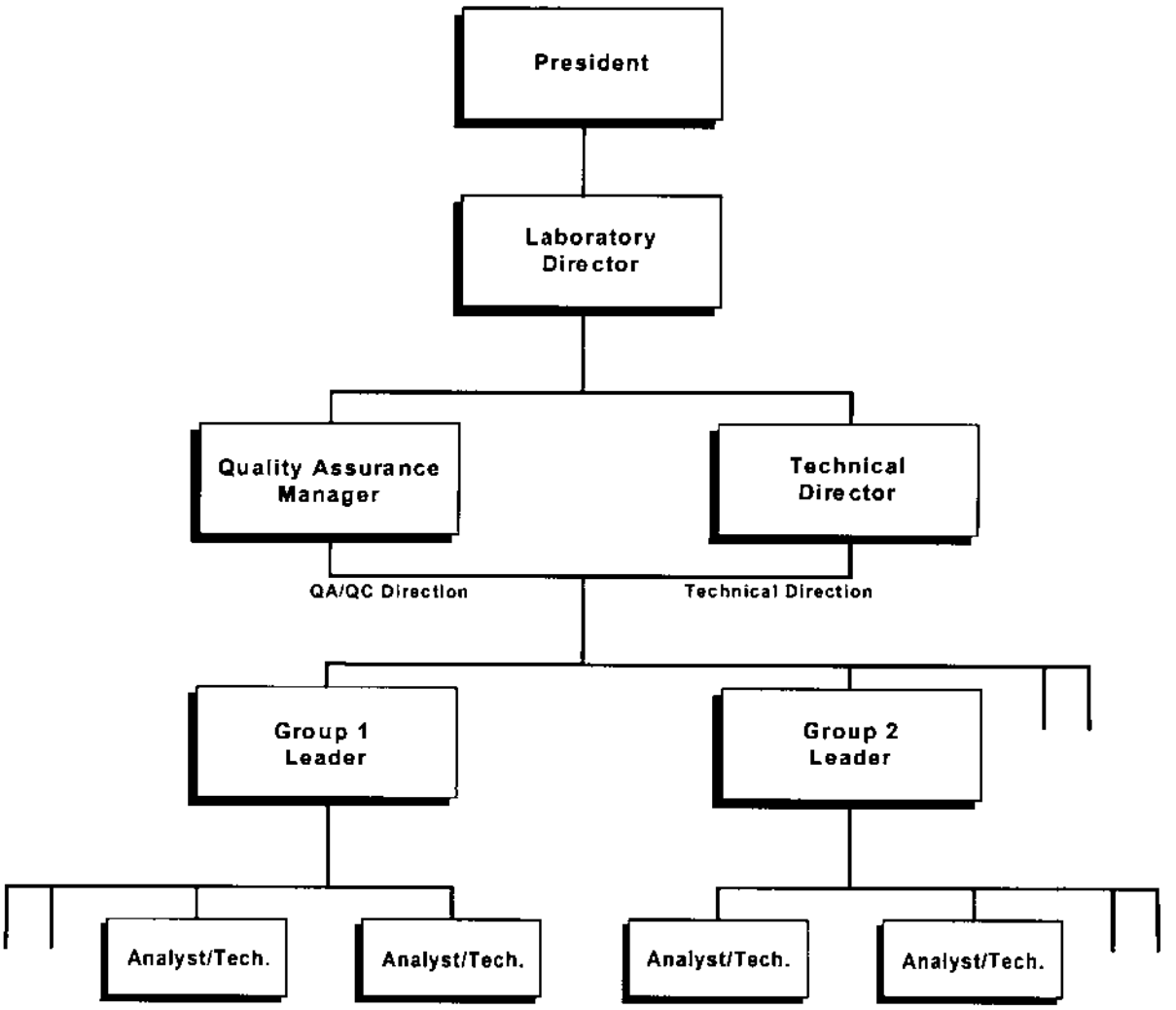

v. Access to all systems is limited by use of log-in and password protection and is maintained by the system administrator.

There are four forms of electronic data that are generated in the laboratory and a synopsis of the archiving of these data follows:

LIMS Database

Backup frequency:	Daily
Backup media:	Hard Disk
Backup software:	MS SQL Server Backup
Backup versions kept:	Ten previous versions
Onsite copy:	Redundancy by using mirrored hard drive

Instrument Data

Backup frequency:	Weekly
Backup media:	Quantum 4000 DLT Raid Tape and DLT Tape
Backup software:	Computer Associates ArcServIT
Backup versions kept:	All versions
Offsite copy:	One

Manual Data

Backup frequency:	Weekly
Backup media:	Quantum 4000 DLT Raid Tape and DLT Tape
Backup software:	Computer Associates ArcServIT
Backup versions kept:	All versions
Offsite copy:	One

Hard Copy Data

Backup media:	Digital CD
Backup software:	Xerox Pagis
Backup versions kept:	All versions
Offsite copy:	One

vi. All electronic records are stored for a minimum of five years.

e) Job descriptions of key staff and reference to the job descriptions of other staff;

i. Calscience's Laboratory Director, through its President, is the final authority on all issues dealing with data quality and has the authority to require that procedures be amended or discontinued, or analytical results voided or repeated. He or she also has the authority to suspend or terminate employees on the grounds of non-compliance with QA/QC procedures. In addition, the Laboratory Director:

- ⇨ Ensures that Calscience remains current with all regulations which affects operations and disseminate all such changes in regulatory requirements to the QA Manager, Technical Director, and Group Leaders;
- ⇨ Develops and implements Calscience's QA Program which assures that all data generated will be scientifically sound, legally defensible, and of known precision and accuracy;
- ⇨ Conducts annual reviews of Calscience's QA Program;
- ⇨ Routinely monitors the QA Program to ensure compliance;
- ⇨ Develops and implement new and revised QA procedures to improve data quality;
- ⇨ Coordinates all laboratory accreditation efforts;
- ⇨ Develop and implement project specific QA plans (QAPPs); and
- ⇨ Monitor in-house training on quality assurance and control.

- ⇨ Develops and implements laboratory policy in order to review all new work and ensure that it has the appropriate facilities and resources to complete such work.

ii. The QA Manager has full authority through the Laboratory Director in matters dealing within the laboratory. The QA Manager can make recommendations to the Laboratory Director regarding the suspension or termination of employees on the grounds of non-compliance with QA/QC procedures. An alternate QA Manager is always assigned. In the absence of the primary designate, the alternate will act in the QA Manager's capacity with the full authority of the position as allowed by Calscience governing documents. In addition, the QA Manager performs the following:
- ⇨ Implements Calscience's QA Program;
- ⇨ Monitors the QA Program within the laboratory to ensure complete compliance with its objectives, QC procedures, holding times, and compliance with client or project specific data quality objectives;
- ⇨ Distributes performance evaluation (PE) samples on a routine basis to ensure the production of data that meets the objectives of its QA Program;
- ⇨ Maintains all SOPs used at Calscience;
- ⇨ Maintains records and archives of all PE results, audit comments, and customer inquiries concerning the QA program;
- ⇨ Performs statistical analyses of QC data and establish controls that accurately reflect the performance of the laboratory;
- ⇨ Conducts periodic performance and system audits to ensure compliance with the elements of Calscience's QA Program;
- ⇨ Prescribes and monitor corrective action;
- ⇨ Serves as in-house client representative on all project inquiries involving data quality issues;
- ⇨ Coordinates data review process to ensure that thorough reviews are conducted on all project files;
- ⇨ Develops revisions to existing SOPs;
- ⇨ Reports the status of in-house QA/QC to the Laboratory Director;
- ⇨ Distributes new SOPs to all applicable lab areas;
- ⇨ Maintains records and archives of all QA/QC data including but not limited to method detection limit (MDL) studies, accuracy and precision control charts, and completed log books; and
- ⇨ Conducts and/or otherwise ensures that an adequate level of QA/QC training is conducted within the laboratory.

iii. The Technical Director has full authority through the Laboratory Director in matters dealing with technical proceedings within the laboratory. He or she can make recommendations to the Laboratory Director regarding the suspension or termination of employees on the grounds of non-compliance with QA/QC procedures. The Technical Director also
- ⇨ Implements Calscience's training program to ensure that all personnel are properly trained for the tasks being performed;
- ⇨ Resolves technical difficulties encountered during normal operations;
- ⇨ Oversees all method developmental activities within Calscience;
- ⇨ Ensures compliance with approved methodologies, standard operating procedures (SOPs), this manual, QAPPs, and all other governing documents; and
- ⇨ Implements a system of continual improvement within Calscience, to include reviews of new technologies that may potentially improve quality.

iv. The Group Leaders have the authority to accept or reject data based on pre-defined QC criteria. In addition, with the approval of the QA Manager, the Group Leaders may accept data that falls outside of normal QC limits if, in his or her professional judgment, there are technical justifications for the acceptance of such data. The circumstances must be well documented and any need for corrective action identified must be defined and initiated. The authority of the Group Leaders in QC related matters results directly from the QA Manager. The Group Leaders also
- ⇨ Actively support the implementation of Calscience's QA Program;
- ⇨ Ensure that their employees are in full compliance with Calscience's QA Program;

- ⇨ Maintain accurate (by recommending changes to) SOPs and enforce routine compliance with SOPs;
- ⇨ Conduct technical training of new staff and when modifications are made to existing procedures;
- ⇨ Perform secondary QC reviews on all data generated within their respective groups;
- ⇨ Maintain a work environment which emphasizes the importance of data quality; and
- ⇨ Provide support to all levels of Calscience Management.

v. Laboratory staff members have the authority to accept or reject data based on compliance with well-defined QC acceptance criteria. Their supervisor must approve the acceptance of data that falls outside the QC criteria.
- ⇨ Maintain a working knowledge of Calscience's QA Program;
- ⇨ Ensure that all data is generated in compliance with Calscience's QA Program;
- ⇨ Perform work in strict accordance with the SOPs;
- ⇨ Ensure that all documentation related to their work is complete, accurate, and legible; and
- ⇨ Immediately inform their supervisors of data quality problems.

vi. Project Managers
- ⇨ Maintain a working knowledge of Calscience's QA Program;
- ⇨ Verify that all final reports are in compliance with predetermined client- and/or project-specific criteria;
- ⇨ Ensure that all supporting documentation to a specific report is complete, accurate, and legible; and
- ⇨ Effectively track and implement systems that ensure the best available service to Calscience's customers.

f) Identification of the laboratory's approved signatories; at a minimum, the title page of the quality manual has the signed and dated concurrence (with appropriate titles) of all responsible parties including the QA manager, technical director, and the laboratory director;

g) The laboratory's procedures for achieving traceability of measurements;

h) A list of all test methods under which the laboratory performs its accredited testing may be found in the appendix of this manual;

i) Mechanisms for ensuring that the laboratory reviews all new work to ensure that it has the appropriate facilities and resources before commencing such work;

j) Reference to the calibration and/or verification test procedures used;

Calibration procedures and verification of acceptability for each set of required calibrations are defined in Section 13 (Calibration) and Section 12 (Quality Control) of each standard operating procedure.

k) Procedures for handling samples received;

The generation of quality analytical data begins with the collection of the sample and, therefore, the integrity of the sample collection process is of importance to Calscience. Samples must be collected in such a way that foreign material is not introduced into the samples and that analytes of interest do not escape from the samples or degrade prior to their analysis. To ensure sample integrity and representativeness, the following items must be considered:

- ⇨ Samples must be collected in appropriate containers. In general, glass containers are used for organic analytes and polyethylene for inorganic/metal analytes;

⇨ Only new sample containers which are certified and documented clean in accordance with U.S. EPA OSWER Directive No. 9240.0-0.05 specifications shall be provided by Calscience for sample collection;

Calscience's chain-of-custody document is used to forward samples from the client to the laboratory. As the basic elements of most all chain-of-custody documents are similar, clientele may choose to use their own chain-of-custody document to forward samples to Calscience.

Upon receipt by Calscience, samples proceed through an orderly processing sequence designed to ensure continuous integrity of both the sample and its documentation from sample receipt through its analysis and beyond.

All coolers that are received by the Sample Control Group undergo a preliminary examination in accordance with Part A of the Sample Receipt Form. Specifically, each sample is carefully examined for label identification, proper container (type and volume), chemical preservation when applicable, container condition, and chain-of-custody documentation consistency with sample labels. Discrepancies are noted on the Sample Receipt Form, the chain-of-custody and, if possible, discussed with the client prior to his or her departure. If this is not possible, the discrepancies are communicated to the client for resolution prior to the completion of the log-in process. The temperature of the cooler is measured and, with other observations, is recorded in Part B of the Sample Receipt Form. Additional comments are recorded in Part C of the Sample Receipt Form.

During the log-in process each sample is assigned a unique laboratory identification number through a computerized Laboratory Information Management System (LIMS), which stores all essential project information. Calscience maintains multiple security levels of access into LIMS to prevent unauthorized tampering/release of sample and project information.

Once all analyses for a sample have been completed and the sample container is returned to Sample Control, it shall remain in refrigerated storage for a period not less than 30 days following sample receipt unless the client requests return/forwarding of the sample. Following the 30-day refrigerated storage period, the samples are placed into ambient storage for another period not less than 30 days after which the samples are bulked into drums for later disposal.

l) Reference to the major equipment and reference measurement standards used as well as the facilities and services used by the laboratory in conducting tests;

A list of major equipment is kept up-to-date on the List of Major Assets. This, as well as a list of reference measurement standards and their certificates of calibration, is maintained by the QA Manager.

m) Reference to procedures for calibration, verification and maintenance of equipment;
Laboratory SOPs (T042, T050 and T051) are available to staff for calibration, verification and maintenance of equipment.

n) Reference to verification practices which may include interlaboratory comparisons, proficiency testing programs, use of reference materials and internal quality control schemes;

Instrument calibration is required to ensure that the analytical system is operating correctly and functioning at the proper sensitivity such that required reporting limits can be met. Each instrument is calibrated with standard solutions appropriate to the type of instrument and the linear range established for the analytical method. The manufacturer's guidelines, the analytical method, and/or the requirements of special contracts determine the frequency of calibration and the concentration of calibration standards, whichever is most applicable. The following are very general guidelines and are not meant to be all-inclusive. Detailed calibration procedures are specified in the SOP for each method performed.

Gas Chromatography/Mass Spectroscopy (GC/MS): Each day prior to analysis of samples, all GC/MS instruments are tuned with 4-bromofluorobenzene (BFB) for VOCs and decafluorotriphenylphosphine (DFTPP) for SVOCs in accordance with the tuning criteria specified in the applicable methods. Samples are not analyzed until the method-specific tuning requirements have been met.

After the tuning criteria are met, the instrument is then calibrated for all target analytes and an initial multipoint calibration curve established. Alternatively, the previous calibration curve may be used if validated by a calibration verification (CV) standard. All target analytes are represented in the calibration and certain key target analytes referred to as system performance calibration compounds (SPCCs) and calibration check compounds (CCCs) are used for curve acceptance determination. For the initial calibration to be deemed acceptable, the SPCCs and CCCs must meet established acceptance criteria and must be re-evaluated and meet the acceptance criteria, at a minimum, every twelve (12) hours thereafter.

Non-GC/MS Chromatography: The field of chromatography involves a variety of instrumentation and detectors. While calibration standards and control criteria vary depending upon the type of system and analytical methodology required for a specific analysis, the general principles of calibration apply uniformly. Each chromatographic system is calibrated prior to sample analysis. An initial multipoint calibration curve is generated using all target analytes. All target analytes must meet the acceptance criteria for the calibration to be deemed acceptable. The continued validity of the initial multipoint calibration is verified every 12 hours using a calibration verification (CV) standard containing all target analytes. If the CV fails to meet the acceptance criteria, the system is re-calibrated and all samples analyzed since the last acceptable CV must be re-analyzed.

Inductively Coupled Plasma Emission Spectroscopy: Initial calibration consists of a calibration blank (CB) plus one calibration standard. The calibration is verified by the re-analysis of the standard and initial calibration verification (ICV) standard. If the standard and the ICV fail to meet the acceptance criteria, the initial calibration is considered invalid and is re-performed.

Continuing calibration verification (CCV) consists of a mid-concentration standard plus a calibration blank (CB) analyzed every 10 samples and at the end of the sequence. If the CCV and/or CB fail to meet the acceptance criteria, the instrument must be re-calibrated and all samples analyzed since the previous acceptable CCV and/or CB must be re-analyzed.

ICP/MS Spectroscopy: Each day prior to the analysis of samples, all ICP/MS instruments undergo mass calibration and resolution checks prior to initial calibration. Initial calibration consists of a calibration blank (CB) and at least one calibration standard. The calibration is verified by the re-analysis of the standard and initial calibration verification (ICV) standards. If the standard and the ICV fail to meet the acceptance criteria, the initial calibration is considered invalid and is re-performed.

Continuing calibration verification (CCV) consists of a mid-concentration standard plus a calibration blank (CB) analyzed every 10 samples and at the end of the sequence. If the CCV and/or CB fail to meet the acceptance criteria, the instrument must be re-calibrated and all samples analyzed since the previous acceptable CCV and/or CB must be re-analyzed.

Flame and Graphite Furnace Atomic Absorption Spectroscopy: Initial calibration consists of a calibration blank plus a low, medium, and high calibration standard. Continuing calibration verification (CCV) consists of midpoint calibration standard plus a calibration blank (CB) analyzed every 10 samples and at the end of the sequence. If the CCV and/or CB fail to meet the acceptance criteria, the instrument must be re-calibrated and all samples analyzed since the previous acceptable CCV and/or CB must be re-analyzed. If the calibration blanks contain target analyte concentrations exceeding the acceptance limits, the cause must be determined and corrected.

General Inorganic Analyses: General inorganic (non-metal) analyses involve a variety of instrumental and wet chemistry techniques. While calibration procedures vary depending on the type of instrumentation and methodology, the general principles of calibration apply universally. Each system or method is initially calibrated using standards prior to analyses being conducted with continual verification that the calibration remains acceptable throughout analytical processing. If continual calibration verification fails to meet the acceptance criteria, the instrument must be re-calibrated and all samples analyzed since the previous acceptable CCV must be re-analyzed.

o) Procedures to be followed for feedback and corrective action whenever testing discrepancies are detected, or departures from documented policies and procedures occur;

These procedures may be found in SOP-T015 (Error Correction of Test Records) and SOP-T022 (Corrective Actions).

p) The laboratory management arrangements for permitting exceptions and departures from documented policies and procedures or from standard specifications;

Calscience's SOPs are in substantial conformity with their corresponding published method references. Departure from approved SOPs shall be approved if necessary or appropriate due to the nature or composition of the sample or otherwise based on the reasonable judgment of Calscience's Laboratory Director, Technical Director, or QA Manager. Departures shall be made on a case-by-case basis consistent with recognized standards of the industry. In no case shall departures be approved without written communication between Calscience and the affected client.

q) Procedures for dealing with complaints;

Procedures for dealing with complaints may be found in SOP-T018, Handling of Complaints.

r) Procedures for protecting confidentiality (including national security concerns) and proprietary rights;

Calscience is sensitive to the fact that much of the analytical work performed for clientele may be subject to litigatory processes. Calscience, therefore, holds all information in strict confidence with laboratory release only to the client. Information released to entities other than the client is performed only upon written request from the client.

Due to the investigative nature of most site assessments, analytical information may become available to regulatory agencies or other evaluating entities during site assessment of the laboratory for the specific purpose of attaining laboratory certifications, accreditations, or evaluation of laboratory qualification for future work. During these occurrences, the laboratory will make its best effort to maintain the confidence of client specific information.

s) Procedures for audits and data review;

Calscience participates in a wide variety of system and performance audits conducted by numerous federal and state agencies, as well as through its major clientele. These audits are conducted to verify that analytical data produced conforms to industry standards on a routine basis.

A System Audit is a qualitative evaluation of the measurement systems utilized at Calscience, specifically, that Calscience has, in place, the necessary facilities, staff, procedures, equipment, and instrumentation to generate acceptable data. This type of audit typically involves an on-site inspection of the laboratory facility, operations, and interview of personnel by the auditing agency.

A Performance Audit verifies the ability of Calscience to correctly identify and quantitate compounds in blind check samples. This type of audit normally is conducted by the auditing agency through

laboratory participation in round robin Performance Evaluation (PE) programs. Examples of current PE program involvement include those conducted by the USEPA (WS/WP and DMR-QA), CADHS/ELAP (solids and bioassay), and ERA InterLaB Soil Studies, as well as programs administered by major industry.

In addition to performance and system audits conducted by auditing agencies or clients, Calscience's QA Manager in association with the Laboratory Director regularly generates quarterly QA Reports.

A reporting system is a valuable tool for measuring the overall effectiveness of Calscience's QA program. It serves as an instrument for evaluating the program's design, identification of problems and trends, and planning for future needs.

The Quarterly QA Reports normally addresses the following information:

- ⇨ Laboratory certifications and approvals;
- ⇨ System and performance audits;
- ⇨ Performance evaluation studies;
- ⇨ LIMS
- ⇨ Performance on major contracts; and
- ⇨ Miscellaneous issues.

The QA goals for the following year will be included in the last Quarterly QA Report of every year.

Should the result of any audit detect a significant error, which has been identified to adversely affect released data, the situation shall be thoroughly investigated. Corrective measures shall be enacted to include system re-evaluation, the determined affect on released data and client notification, as necessary.

t) Processes/procedures for establishing that personnel are adequately experienced in the duties they are expected to carry out and are receiving any needed training;

Quality control begins prior to sample(s) receipt at the laboratory. The selection of well qualified personnel, based upon education and/or experience is the first step in successful laboratory management. A thorough screening of job applicants and selection of the best candidate to fulfill a well-defined need is as important an aspect of a successful QA/QC program as a careful review of analytical data.

Employee training and approval procedures used at Calscience are specified in SOP-T010, "Employee Training", and includes but is not limited to the following:

- ⇨ A thorough understanding of the applicable regulatory method and Calscience SOP;
- ⇨ A review of Calscience's QA Program Manual and thorough understanding of the specifics contained therein that are directly related to the analysis to be performed;
- ⇨ Instruction by the applicable Group Leader on all aspects of the analytical procedure;
- ⇨ Performance of analyses under supervision of experienced laboratory personnel, which shall include analysis of blind QC check samples, when deemed appropriate;
- ⇨ Participation in in-house seminars on analytical methodologies and procedures;
- ⇨ Participation in job related seminars outside of the laboratory; and
- ⇨ Participation in conventions and meetings, i.e., ACS, etc.

u) Ethics policy statement developed by the laboratory and processes/procedures for educating and training personnel in their ethical and legal responsibilities including the potential punishments and penalties for improper, unethical, or illegal actions;

A vital part of Calscience Environmental Laboratories' analytical laboratory services is their Laboratory Ethics Training Program. An effective program starts with an Ethics Policy Statement that is supported by all staff, and is reinforced with initial and ongoing ethics training.

"It shall be the policy of Calscience to conduct all business with integrity and in an ethical manner. It is a basic and expected responsibility of each staff member and manager to hold to the highest ethical standard of professional conduct in the performance of all duties."

A proactive ethics training program is the most effective means of deterring and detecting improper, unethical, or illegal actions in the laboratory. There are three facets to the program: (1) clearly define improper, unethical, and illegal actions; (2) outline elements of prevention and detection programs for improper, unethical, or illegal actions; and (3) identify examples of inappropriate (i.e., potentially fraudulent) laboratory practices.

Definition of Improper, Unethical, and Illegal Actions

Improper actions are defined as deviations from contract-specified or method-specified analytical practices and may be intentional or unintentional.

Unethical or illegal actions are defined as the deliberate falsification of analytical or quality assurance results, where failed method or contractual requirements are made to appear acceptable.

Prevention of laboratory improper, unethical, or illegal actions begins with a zero-tolerance philosophy established by management. Improper, unethical, or illegal actions are detected through the implementation of oversight protocols.

Prevention and Detection Program for Improper, Unethical, or Illegal Actions

Calscience management has implemented a variety of proactive measures to promote prevention and detection of improper, unethical, or illegal activities. The following components constitute the basic program:

- ⇨ An Ethics and Data Integrity Agreement that is read and signed by all personnel;
- ⇨ Initial and annual ethics training;
- ⇨ Internal audits;
- ⇨ Inclusion of anti-fraud language in subcontracts;
- ⇨ Analyst notation and sign-off on manual integration changes to data;
- ⇨ Active use of electronic audit functions when they are available in the instrument software; and
- ⇨ A "no-fault" policy that encourages laboratory personnel to come forward and report fraudulent activities.

A proactive, "beyond the basics" approach to the prevention of improper, unethical, or illegal actions are a necessary part of laboratory management. As such, in addition to the requirements above, Calscience has a designated ombudsman (data integrity officer) to whom laboratory personnel can report improper, unethical, or illegal practices, or provide routine communication of training, lectures, and changes in policy intended to reduce improper, unethical, or illegal actions.

Examples of Improper, Unethical, or Illegal Practices

Documentation that clearly shows how all analytical values were obtained are maintained by Calscience and supplied to the data user as needed. To avoid miscommunication, Calscience clearly documents all errors, mistakes, and basis for manual integrations within the project file and case narrative as applicable. Notification is also made to the appropriate supervisor so that appropriate corrective actions can be initiated. Gross deviations from specified procedures are investigated for potential improper, unethical, or illegal actions, and findings of fraud are fully

investigated by senior management. Examples of improper, unethical, or illegal practices are identified below:

- ⇨ Improper use of manual integrations to meet calibration or method QC criteria (for example, peak shaving or peak enhancement are considered improper, unethical, or illegal actions if performed solely to meet QC requirements);
- ⇨ Intentional misrepresentation of the date or time of analysis (for example, intentionally resetting a computer system's or instrument's date and/or time to make it appear that a time/date requirement was met);
- ⇨ Falsification of results to meet method requirements;
- ⇨ Reporting of results without analyses to support (i.e., dry-labbing);
- ⇨ Selective exclusion of data to meet QC criteria (for example, initial calibration points dropped without technical or statistical justification);
- ⇨ Misrepresentation of laboratory performance by presenting calibration data or QC limits within data reports that are not linked to the data set reported, or QC control limits presented within QAPP that are not indicative of historical laboratory performance or used for batch control;
- ⇨ Notation of matrix inference as basis for exceeding acceptance limits (typically without implementing corrective actions) in interference-free matrices (for example, method blanks or laboratory control samples);
- ⇨ Unwarranted manipulation of computer software (for example, improper background subtraction to meet ion abundance criteria for GC/MS tuning, chromatographic baseline manipulations);
- ⇨ Improper alteration of analytical conditions (for example, modifying EM voltage, changing GC temperature program to shorter analytical run time) from standard analysis to sample analysis;
- ⇨ Misrepresentation of QC samples (for example, adding surrogates after sample extraction, omitting sample preparation steps for QC samples, over- or underspiking); and
- ⇨ Reporting of results from the analysis of one sample for those of another.

v) Reference to procedures for reporting analytical results;

Standard operating procedures pertaining to the reporting of results are available to all laboratory personnel. They are: SOP-T009, Significant Figures, Rounding, and Reporting of Results; SOP-T025, Reporting of Tentatively Identified Compounds (TICs); and T-026, Reporting of Data Qualifiers.

All analytical data generated within Calscience is thoroughly checked for accuracy and completeness. The data validation process consists of data generation, reduction, and four levels of review as described below.

The analyst generating the analytical data has the primary responsibility for its correctness and completeness. All data is generated and reduced following protocols specified in the appropriate SOPs. Each analyst reviews the quality of his or her work based upon an established set of guidelines specified in the SOPs or as specified by project requirements. The analyst reviews the data package to ensure that:

- ⇨ Holding times have not been exceeded;
- ⇨ Sample preparation information is correct and complete;
- ⇨ Analysis information is correct and complete;
- ⇨ The appropriate procedures were employed;
- ⇨ Analytical results are correct and complete;
- ⇨ All associated QC is within established control limits and, if not, out-of-control forms are completed thoroughly explaining the cause and corrective action taken;
- ⇨ Any special sample preparation and analytical requirements have been met; and
- ⇨ Documentation is complete, i.e., all anomalies in the preparation and analysis have been documented; out-of-control forms, if required, are complete, etc.

The data reduction and validation steps are documented, signed, and dated by the analyst on the QC Review coversheet accompanying each data package. This initial review step, performed by the analyst, is designated as primary review. The analyst then forwards the data package to his or her Group Leader, or designated data reviewer, who performs a secondary review. Secondary reviews consist of an independent check equivalent to that of the primary review and are designed to ensure that:

- ⇨ Calibration data is scientifically sound, appropriate to the method, and completely documented;
- ⇨ QC data is within established guidelines or reported with appropriate clarification/qualification;
- ⇨ Qualitative identification of sample components is correct;
- ⇨ Quantitative results are correct;
- ⇨ Documentation is complete and any anomalies properly addressed and documented;
- ⇨ The data is ready for incorporation into the final report package; and
- ⇨ The data package is complete and ready for archiving.

A significant component of the secondary review is the documentation of any errors that have been identified and corrected during the review process. Calscience believes that the data package that is submitted for a secondary review should be free from errors. Errors that are discovered are documented and formally transmitted to the appropriate Group Leader. The cause of the errors are then addressed by additional training or clarification of procedures (SOP revisions) to ensure that similar errors do not recur and high quality data will be generated.

Signature of Data Reviewer and the date of review document the completion of secondary reviews on the QC Review coversheet. These constitute approval for data release and generation of analytical report.

During both of the QC review processes, 100% of the raw data associated with the entire project is available to the reviewer. Data packages are checked back to the raw data as deemed necessary by the reviewer.

Following draft report generation, the report is reviewed by the Project Manager to ensure that the data set and quality control data is complete and meets the specific requirements of the project. When available, the data is also evaluated against historical site information. Once all requested analytical work has been verified as complete, a final report is generated and signed by the Project Manager.

Following approval for release by the Project Manager, the Quality Assurance Manager or Designee to ensure that the analytical and quality control data is correct performs a final review. The Quality Assurance Manager reviews 10% of the project files back to the raw data.

A variety of reporting formats, from normal typed reports to computerized data tables to complex reports discussing regulatory issues are available. In general, Calscience reports contain the following information.

Analytical Data

Analytical data is reported by sample and test. Pertinent information including date(s) sampled, received, prepared, and analyzed are included on each results page. The reporting limit for each method analyte is also listed.

QC Data

A QC Summary is provided with each final report. Unless otherwise specified in a QAPP or requested by the client, QC Summaries include results for method blanks, matrix spikes, matrix spike duplicates, and surrogate spikes. Laboratory control sample and method blank surrogates are

routinely included if matrix interference results in a QC outlier. The effective control limits for the reported QC values are also provided on the QC Summary as well as explanations for any QC outliers.

As required for the project, data reports from "results only" through "full CLP" will be generated and provided. Included in this range are reports for the major DoD programs including NFESC, AFCEE, and USACE.

Methodology

References for the analytical methodology employed are included on all final analytical reports.

Signatory

Final reports are ready for release to the client following review and approval by the Project Manager and QA Manager, as evidenced by their signature on the final report cover page.

Preliminary Data

Upon client request, preliminary data shall be released prior to completion of a full QC review. Preliminary data is subject to change pending QC review and, therefore, shall be clearly marked as "Preliminary, QC Pending" and not include a signature of approval. This qualification is provided as notification to the client that the data review process has not been completed yet and that the data is subject to possible modification resulting therefrom.

w) A Table of Contents and applicable lists of references and glossaries, and appendices.

5.3 Audits

5.3.1 Internal Audits

The laboratory arranges annual internal audits to verify that its operations continue to comply with the requirements of the laboratory's said quality system. The quality assurance officer plans and organizes audits as required by a predetermined schedule and requested by management. Trained and qualified personnel, who are wherever resources permit, independent of the activity to be audited, carry out such audits. Personnel do not audit their own activities except when it can be demonstrated that an effective audit will be carried out. Where the audit findings cast doubt on the correctness or validity of the laboratory's calibrations or test results, the laboratory takes immediate corrective action and immediately notifies, in writing, any client whose work was involved.

The outcome of internal audits is included in the applicable quarterly report to management. The QA Manager is responsible for maintaining these reports.

5.3.2 Managerial Review

Calscience management conducts an annual review of its quality system and its testing and calibration activities to ensure its continuing suitability and effectiveness and to introduce any necessary changes or improvements in the quality system and laboratory operations. This review takes account of reports from managerial and supervisory personnel, the outcome of recent internal audits, assessments by external bodies, the results of inter-laboratory comparisons or proficiency tests, any changes in the volume and type of work undertaken, feedback from clients, corrective actions, and other relevant factors. The laboratory shall have a procedure for review by management, and maintain records of review findings and actions.

5.3.3 Audit Review

All audit and review findings and any corrective actions that arise from them are documented. The laboratory management ensures that these actions are discharged within the agreed time frame as indicated in the quality manual and/or SOPs.

5.3.4 Performance Audits

In addition to periodic audits, the laboratory ensures the quality of results provided to clients by implementing checks to monitor the quality of the laboratory's analytical activities. Examples of such checks are:

a) Internal quality control procedures using statistical techniques (see Section 5.4 below);

b) Participation in proficiency testing or other interlaboratory comparisons;

c) Use of certified reference materials and/or in-house quality control using secondary reference materials as specified in Section 5.4;

d) Replicate testing using the same or different test methods;

e) Re-testing of retained samples;

f) Correlation of results for different but related analysis of a sample (for example, total phosphorus should be greater than or equal to orthophosphate).

5.3.5 Corrective Actions

a) In addition to providing acceptance criteria and specific protocols for corrective actions in SOP-T022, the laboratory implements general procedures to be followed to determine when departures from documented policies, procedures and quality control have occurred. These procedures include but are not limited to the following:

   1) Identify the individual(s) responsible for assessing each QC data type;

   2) Identify the individual(s) responsible for initiating and/or recommending corrective actions;

   3) Define how the analyst shall treat a data set if the associated QC measurements are unacceptable;

   4) Specify how out-of-control situations and subsequent corrective actions are to be documented; and

   5) Specify procedures for management (including the QA officer) to review corrective action reports.

b) To the extent possible, sample results are reported only if all quality control measures are acceptable. If a quality control measure is found to be out of control, and the data are to be reported, all samples associated with the failed quality control measure are reported with the appropriate data qualifier(s).

5.4 Essential Quality Control Procedures

These general quality control principles apply, where applicable, to all testing at Calscience. The manner in which each is implemented is dependent on the types of tests performed by the laboratory and is further described in Appendix D and in SOP-T020 (Internal Quality Control Checks. The standards for any given test type assures that the applicable principles are addressed:

a) All laboratories have detailed written protocols in place to monitor the following quality controls:

   1) Positive and negative controls (blanks, spikes, reference toxicants, etc.) to monitor tests;

   2) Tests to define the variability and/or repeatability of the laboratory results such as replicates;

   3) Measures to assure the accuracy of the test method including calibration and/or continuing calibrations, use of certified reference materials, proficiency test samples, or other measures;

   4) Measures to evaluate test method capability, such as detection limits and quantitation limits or range of applicability such as linearity;

   5) Selection of appropriate formulae to reduce raw data to final results such as regression analysis, comparison to internal/external standard calculations, and statistical analyses;

   6) Selection and use of reagents and standards of appropriate quality;

   7) Measures to assure the selectivity of the test for its intended purpose; and

   8) Measures to assure constant and consistent test conditions (both instrumental and environmental) where required by the test method, such as temperature, humidity, light, or specific instrument conditions.

b) All quality control measures are assessed and evaluated on an on-going basis, and quality control acceptance criteria are used to determine the usability of the data. (See Appendix D.)

c) The laboratory has procedures for the development of acceptance/rejection criteria where no method or regulatory criteria exist. (See 11.2, Sample Acceptance Policy.)

d) The quality control protocols specified in the method manual (10.1.2) is followed. Calscience ensures that the essential standards outlined in NELAC 5, Appendix D, or mandated methods or regulations (whichever are more stringent) are incorporated into the method manuals. When it is not apparent which is more stringent the QC in the mandated method or regulations is to be followed.

   The essential quality control measures for testing are found in Appendix D.

6.0 PERSONNEL

6.1 General Requirements for Laboratory Staff

Calscience's testing departments have a sufficient level of personnel with the necessary education, training, technical knowledge and experience to perform the assigned functions.

All personnel are responsible for complying with all quality assurance/quality control requirements that pertain to their organizational/technical function. Each technical staff member must have a combination

of experience and education to adequately demonstrate a specific knowledge of their particular function and a general knowledge of laboratory operations, test methods, quality assurance/quality control procedures and records management.

6.2 Laboratory Management Responsibilities

In addition to Section 4.2.d, the laboratory management:

a) Defines the minimum level of qualification, experience and skills necessary for all positions in the laboratory. In addition to education and/or experience, basic laboratory skills such as using a balance and quantitative techniques, are considered.

b) Ensures that all technical laboratory staff members demonstrate capability in the activities for which they are responsible. Such demonstration is documented (See Appendix C).

   Note: In departments with specialized "work cells" (a well-defined group of analysts that together perform the method analysis), the group as a unit meets the above criteria and this demonstration is fully documented.

c) Ensures that the training of each member of the technical staff is kept up-to-date (on-going) by the following:

   1) Keeping evidence on file that demonstrates that each employee has read, understood, and is using the latest version of the laboratory's in-house quality documentation that relates to his/her job responsibilities.

   2) Documenting training courses or workshops on specific equipment, analytical techniques, or laboratory procedures.

   3) Documenting employee attendance at training courses on ethical and legal responsibilities including the potential punishments and penalties for improper, unethical or illegal actions. Keeping on file evidence that demonstrates that each employee has read, acknowledges, and understands their personal ethical and legal responsibilities including the potential punishments and penalties for improper, unethical or illegal actions.

   4) Maintains up-to-date analyst training records that contain a certification that technical personnel have read, understood and agreed to perform the most recent version of the test method (the approved method or standard operating procedure as defined by the laboratory document control system, 5.2.d) and documentation of continued proficiency by at least one of the following once per year:

      i. Acceptable performance of a blind sample (single blind to the analyst);

      ii. Another demonstration of capability;

      iii. Successful analysis of a blind performance sample on a similar test method using the same technology (e.g., GC/MS volatiles by purge and trap for Methods 524.2, 624, or 5035/8260) would only require documentation for one of the test methods;

      iv. At least four consecutive laboratory control samples with acceptable levels of precision and accuracy;

      v. If i-iv cannot be performed, analysis of authentic samples with results statistically indistinguishable from those obtained by another trained analyst.

d) Documents all analytical and operational activities of the laboratory;

e) Supervises all personnel employed by the laboratory;

f) Ensures that all sample acceptance criteria (Section 11.0) are verified and that samples are logged into the sample tracking system and properly labeled and stored.

g) Documents the quality of all data reported by the laboratory.

h) Develops a proactive program for the prevention and detection of improper, unethical, or illegal actions. Components of this program could include: internal proficiency testing (single and double blind); post-analysis electronic and magnetic tape audits; effective reward program to improve employee vigilance and co-monitoring; and separate SOPs identifying appropriate and inappropriate laboratory and instrument manipulation practices.

6.3 Records

Records on the relevant qualifications, training, skills and experience of the technical personnel are maintained by the laboratory (see 6.2.c), including records on demonstrated proficiency for each laboratory test method, such as the criteria outlined in 10.2.1 for chemical testing.

7.0 PHYSICAL FACILITIES – ACCOMMODATION AND ENVIRONMENT

7.1 Environment

a) Laboratory accommodations, test areas, energy sources, lighting, heating and ventilation are such that they facilitate proper performance of tests.

b) The environment in which these activities are undertaken does not invalidate the results or adversely affect the required accuracy of the measurements. Particular care shall be taken when such activities are undertaken at sites other than the permanent laboratory premises.

c) The laboratory shall provide for the effective monitoring, control and recording of environmental conditions as appropriate. Such environmental conditions may include biological sterility, dust, electromagnetic interference, humidity, main voltage, temperature, and sound and vibration levels.

d) In instances where monitoring or control of any of the above-mentioned items is specified in a test method or by regulation, the laboratory meets and documents adherence to the laboratory facility requirements.

7.2 Work Areas

a) There is effective separation between neighboring areas when the activities therein are incompatible including volatile organic chemicals handling areas.

b) Access to and use of all areas affecting the quality of these activities are defined and controlled.

c) Adequate measures are taken to ensure good housekeeping in the laboratory and to ensure that any contamination does not adversely affect data quality.

d) Workspaces are available to ensure an unencumbered work area. Work areas include:

   1) Access and entryways to the laboratory;

2) Sample receipt areas;

3) Sample storage areas;

4) Chemical and waste storage areas; and

5) Data handling and storage areas.

8.0 EQUIPMENT AND REFERENCE MATERIALS

a) Calscience is furnished with all items of equipment (including reference materials) required for the correct performance of tests for which accreditation is maintained. Note that Calscience does not use equipment outside its permanent control.

b) All equipment is properly maintained, inspected, and cleaned. Maintenance procedures are documented.

c) Any equipment item that has been subjected to overloading or mishandling, or that gives suspect results, or has been shown by verification or otherwise to be defective, is taken out of service, clearly identified and wherever possible stored at a specified place until it has been repaired and shown by calibration, verification or test to perform satisfactorily. The laboratory shall examine the effect of this defect on previous calibrations or tests.

d) When appropriate, each item of equipment, including reference materials, is labeled, marked, or otherwise identified to indicate its calibration status.

e) Records are maintained of each major item of equipment and all reference materials significant to the tests performed. These records include documentation on all routine and non-routine maintenance activities and reference material verifications.

The records include:

1) The name of the item of equipment;

2) The manufacturer's name, type identification, and serial number or other unique identification;

3) Date received and date placed in service (if available);

4) Current location, where appropriate;

5) If available, condition when received (e.g., new, used, reconditioned);

6) Copy of the manufacturer's instructions, where available;

7) Dates and results of calibrations and/or verifications and date of the next calibration and/or verification;

8) Details of maintenance carried out to date and planned for the future; and

9) History of any damage, malfunction, modification or repair.

9.0 MEASUREMENT TRACEABILITY AND CALIBRATION

9.1 General Requirements

All measuring operations and testing equipment having an effect on the accuracy or validity of tests are calibrated and/or verified before being put into service and on a continuing basis. The laboratory has an established program for the calibration and verification of its measuring and test equipment. This includes balances, thermometers and control standards.

9.2 Traceability of Calibration

a) The overall program of calibration and/or verification and validation of equipment is designed and operated so as to ensure that measurements made by the laboratory are traceable to national standards of measurement.

b) Calibration certificates indicate the traceability to national standards of measurement and provide the measurement results and associated uncertainty of measurement and/or a statement of compliance with an identified metrological specification. The laboratory maintains records of all such certification in the QA office.

c) Where traceability to national standards of measurement is not applicable, the laboratory provides satisfactory evidence of correlation of results, for example, by participation in a suitable program of interlaboratory comparisons, proficiency testing, or independent analysis.

9.3 Reference Standards

a) Reference standards of measurement held by the laboratory (such as Class S or equivalent weights, or traceable thermometers) are used for calibration only and for no other purpose, unless it can be demonstrated that their performance as reference standards has not been invalidated. A body that can provide traceability calibrates reference standards of measurement. Where possible, this traceability is to a national standard of measurement.

b) There is a program of calibration and verification for reference standards.

   i. Two weeks prior to their date of calibration expiration, individual thermometers are removed from service and replaced by newly calibrated units from the supplier.

   ii. Calscience keeps two sets of Class S weights on hand for use in the laboratory. One set is used for daily calibration checks, and the second set is kept for back up use should the first set be damaged, lost or otherwise compromised. The second set of weights is also place in service when the daily use set is shipped off site for recalibration.

   iii. Analytical balances are serviced and calibrated on a routine, annual schedule.

c) Where relevant, reference standards and measuring and testing equipment are subjected to in-service checks between calibrations and verifications. Reference materials are traceable. Where possible, traceability is to national or international standards of measurement, or to national or international standard reference materials.

9.4 Calibration

Calibration requirements are divided into two parts: (1) requirements for analytical support equipment, and (2) requirements for instrument calibration. In addition, the requirements for instrument calibration are divided into initial instrument calibration and continuing instrument calibration verification.

9.4.1 Support Equipment

These standards apply to all devices that may not be the actual test instrument, but are necessary to support laboratory operations. These include but are not limited to: balances, ovens, refrigerators, freezers, incubators, water baths, temperature measuring devices (including thermometers and thermistors), thermal/pressure sample preparation devices and volumetric dispensing devices (such as Eppendorf®, or automatic dilutor/dispensing devices) if quantitative results are dependent on their accuracy, as in standard preparation and dispensing or dilution into a specified volume.

a) All support equipment is maintained in proper working order. The records of all repair and maintenance activities, including service calls is kept.

b) All support equipment is calibrated or verified at least annually, using NIST traceable references when available, over the entire range of use. The results of such calibration are within the specifications required of the application for which this equipment is used or:

   1) The item is removed from service until repaired; or

   2) The laboratory maintains records of established correction factors to correct all measurements.

c) Raw data records are retained to document equipment performance.

d) Prior to use on each working day, balances, ovens, refrigerators, freezers, and water baths are checked in the expected use range, with NIST traceable references where available. The acceptability for use or continued use is according to the needs of the analysis or application for which the equipment is being used.

e) Mechanical volumetric dispensing devices including burettes (except Class A glassware) is checked for accuracy on at least a quarterly use basis. Glass microliter syringes are to be considered in the same manner as Class A glassware, comes with a certificate attesting to established accuracy or the accuracy is initially demonstrated and documented by the laboratory.

9.4.2 Instrument Calibration

This manual specifies the essential elements that define the procedures and documentation for initial instrument calibration and continuing instrument calibration verification to ensure that the data are of known quality and be appropriate for a given regulation or decision. This manual does not specify detailed procedural steps ("how to") for calibration, but establishes the essential elements for selection of the appropriate technique(s). This approach allows flexibility and permits the employment of a wide variety of analytical procedures and statistical approaches currently applicable for calibration. If more stringent standards or requirements are included in a mandated test method or by regulation, the laboratory demonstrates that such requirements are met. If it is not apparent which standard is more stringent, then the requirements of the regulation or mandated test method are to be followed.

Note: In the following sections, initial instrument calibration is directly used for quantitation and continuing instrument calibration verification is used to confirm the continued validity of the initial calibration.

9.4.2.1 Initial Instrument Calibrations

The following items are essential elements of initial instrument calibration:

a) The details of the initial instrument calibration procedures including calculations, integrations, acceptance criteria and associated statistics are included or referenced in the test method SOP. When initial instrument calibration procedures are referenced in the test method, the referenced material is retained by the laboratory and is available for review.

b) Sufficient raw data records are retained to permit reconstruction of the initial instrument calibration, e.g., calibration date, test method, instrument, analysis date, each analyte name, analyst's initials or signature; concentration and response, calibration curve or response factor; or unique equation or coefficient used to reduce instrument responses to concentration.

c) Sample results are quantitated from the initial instrument calibration and may not be quantitated from any continuing instrument calibration verification.

d) All initial instrument calibrations is verified with a standard obtained from a second manufacturer or lot. Traceability shall be to a national standard, when available.

e) Criteria for the acceptance of an initial instrument calibration is established, e.g., correlation coefficient or relative percent difference. The criteria used is appropriate to the calibration technique employed.

f) Results of samples not bracketed by initial calibration standards (within calibration range) are reported as having less certainty, e.g., defined qualifiers or flags or explained in the case narrative. As determined by the method, the lowest calibration standard is at or above the detection limit.

g) If the initial instrument calibration results are outside established acceptance criteria, corrective actions are performed. Data associated with an unacceptable initial instrument calibration is not reported.

h) Calibration standards include concentrations at or below the regulatory limit/decision level, if the laboratory knows these limits/levels, unless these concentrations are below the laboratory's demonstrated detection limits (See D.1.4 Detection Limits).

i) If a reference or mandated method does not specify the number of calibration standards, the minimum number is two, not including blanks or a zero standard. The laboratory's standard operating procedure defines the number of points for establishing the initial instrument calibration.

9.4.2.2 Continuing Instrument Calibration Verification

When an initial instrument calibration is not performed on the day of analysis, the validity of the initial calibration is verified prior to sample analyses by a continuing instrument calibration verification with each analytical batch. The following items are essential elements of continuing instrument calibration verification:

a) The details of the continuing instrument calibration procedure, calculations and associated statistics must be included or referenced in the test method SOP.

b) A continuing instrument calibration verification must be repeated at the beginning and end of each analytical batch. The concentrations of the calibration verification shall be varied within the established calibration range. If an internal standard is used, only one continuing instrument calibration verification must be analyzed per analytical batch.

c) Sufficient raw data records must be retained to permit reconstruction of the continuing instrument calibration verification, e.g., test method, instrument, analysis date, each analyte name, concentration and response, calibration curve or response factor, or unique equations or coefficients used to

convert instrument responses into concentrations. Continuing calibration verification records must explicitly connect the continuing verification data to the initial instrument calibration.

d) Criteria for the acceptance of a continuing instrument calibration verification must be established, e.g., relative percent difference.

e) If the continuing instrument calibration verification results obtained are outside established acceptance criteria, corrective actions must be performed. If routine corrective action procedures fail to produce a second (consecutive and immediate) calibration verification within acceptance criteria, then the laboratory shall demonstrate performance after corrective action with two consecutive successful calibration verifications, or a new instrument calibration must be performed. If the laboratory has not demonstrated acceptable performance, sample analyses shall not occur until a new initial calibration curve is established and verified.

   As an exception, sample data associated with an unacceptable calibration verification may be reported as qualified data under the following special conditions:

   i. When the acceptance criteria for the continuing calibration verification are exceeded high, i.e., high bias and there are associated samples that are non-detects, then those non-detects may be reported. Otherwise the samples affected by the unacceptable calibration verification are reanalyzed after a new calibration curve has been established, evaluated and accepted.

   ii. When the acceptance criteria for the continuing calibration verification are exceeded low, i.e., low bias, those sample results may be reported if they exceed a maximum regulatory limit/decision level. Otherwise the samples affected by the unacceptable verification are reanalyzed after a new calibration curve has been established, evaluated and accepted.

10.0 TEST METHODS AND STANDARD OPERATING PROCEDURES

10.1 Methods Documentation

a) The laboratory has documented instructions on the use and operation of all relevant equipment, on the handling and preparation of samples and for calibration and/or testing, where the absence of such instructions could jeopardize the calibrations or tests.

b) All instructions, standards, manuals, and reference data relevant to the work of the laboratory are maintained up-to-date and be readily available to the staff.

10.1.1 Standard Operating Procedures (SOPs)

Calscience maintains standard operating procedures that accurately reflect all phases of current laboratory activities such as assessing data integrity, corrective actions, handling customer complaints, and all test methods.

a) These documents, for example, may be equipment manuals provided by the manufacturer or internally written documents.

b) The test methods may be copies of published methods as long as any changes or selected options in the methods are documented and included in the methods manual. (See 10.1.2.)

c) Copies of all SOPs are accessible to all personnel.

d) The SOPs are organized.

e) Each SOP clearly indicates the effective date of the document, the revision number and the signatures of the approving authorities.

10.1.2 Laboratory Method Manual(s)

a) The laboratory has and maintains an in-house methods manual for each accredited analyte or test method.

b) This manual may consist of copies of published or referenced test methods or standard operating procedures that have been written by the laboratory. In cases where modifications to the published method have been made by the laboratory or where the referenced test method is ambiguous or provides insufficient detail, these changes or clarifications are clearly described. Each test method includes or references where applicable:

1) Identification of the test method;
2) Applicable matrix or matrices;
3) Detection limit;
4) Scope and application, including components to be analyzed;
5) Summary of the test method;
6) Definitions;
7) Interferences;
8) Safety;
9) Equipment and supplies;
10) Reagents and standards;
11) Sample collection, preservation, shipment, and storage;
12) Quality control;
13) Calibration and standardization;
14) Procedure;
15) Calculations;
16) Method performance;
17) Pollution prevention;
18) Data assessment and acceptance criteria for quality control measures;
19) Corrective actions for out-of-control data;
20) Contingencies for handling out-of-control or unacceptable data;
21) Waste management;
22) References; and
23) Any tables, diagrams, flowcharts, and validation data.

10.2 Test Methods

The laboratory uses appropriate test methods and procedures for all tests and related activities within its responsibility (including, as applicable, sample collection, sample handling, transport and storage, sample preparation and sample analysis). The method and procedures shall be consistent with the accuracy required, and with any standard specifications relevant to the calibrations or tests concerned.

a) When the use of specific test methods for a sample analysis is mandated or requested, only those methods are used.

b) Where test methods are employed that are not required, as in the Performance Based Measurement System approach, the methods are fully documented and validated (see 10.2.1 and Appendix C), and are available to the client and other recipients of the relevant reports.

10.2.1 Demonstration of Capability

a) Prior to acceptance and institution of any test method, satisfactory demonstration of method capability is required. (See Appendix C and 6.2.b.) This demonstration does not test the performance of the method in real world samples, but in the applicable and available clean matrix (sample of a matrix is which no target analytes or interferences are present at concentrations that impact the results of a specific test method), e.g., water, solids and air. In addition, for analytes that do not lend themselves to spiking, the demonstration of capability may be performed using quality control samples.

b) Continuing demonstration of method performance, as per the quality control requirements in Appendix D (such as laboratory control samples) is required.

c) In cases where Calscience analyzes samples using a test method that has been in use by the laboratory before July 1999, and there have been no significant changes in instrument type, personnel or test method, the continuing demonstration of method performance and the analyst's documentation of continued proficiency shall be acceptable. The laboratory shall have records on file to demonstrate that an initial demonstration of capability is not required.

d) In all cases, the appropriate forms, such as the Certification Statement (Appendix C), is completed and retained by the laboratory to be made available upon request. The laboratory retains all associated supporting data necessary to reproduce the analytical results summarized in the Certification Statement. (See Appendix C for an example of a Certification Statement.)

e) Demonstration of capability is completed each time there is a significant change in instrument type, personnel, or test method.

f) In departments with specialized "work cell(s)" (a group consisting of analysts with specifically defined tasks that together perform the test method), the group as a unit must meet the above criteria and this demonstration of capability is fully documented.

g) When a work cell is employed, and the members of the cell change, the new employee(s) must work with an experienced analyst in that area of the work cell where they are employed. This new work cell must demonstrate acceptable performance through acceptable continuing performance checks (appropriate sections of Appendix D, such as laboratory control samples). Such performance is documented and the four preparation batches following the change in personnel must not result in the failure of any batch acceptance criteria, e.g., method blank and laboratory control sample, or the demonstration of capability must be repeated. In addition, if the entire work cell is changed or replaced, the new work cell must perform the demonstration of capability (Appendix C).

h) Performance of the work cell is linked to the training records of the individual members of the work cell (See Section 6.2).

10.3 Sample Aliquots

Where sampling (as in obtaining sample aliquots from a submitted sample) is carried out as part of the test method, the laboratory shall use documented procedures and appropriate techniques to obtain representative subsamples.

10.4 Data Verification

Calculations and data transfers are subject to appropriate checks.

a) The laboratory has Standard Operating Procedures that ensure that the reported data are free from transcription and calculation errors.

b) The laboratory has Standard Operating Procedures that ensure that all quality control measures are reviewed, and evaluated before data are reported.

c) The laboratory has Standard Operating Procedures that address manual calculations including manual integrations.

10.5 Documentation and Labeling of Standards and Reagents

Documented procedures exist for the purchase, receipt and storage of consumable materials used for the technical operations of the laboratory.

a) The laboratory retains records for all standards, reagents and media including the manufacturer/vendor, the manufacturer's Certificate of Analysis or purity (if supplied), the date of receipt, recommended storage conditions, and an expiration date after which the material is not used, unless the laboratory verifies its suitability for testing use.

b) Original containers (such as those provided by the manufacturer or vendor) are labeled with an expiration date.

c) Records are maintained on reagent and standard preparation. These records indicate traceability to purchased stocks or neat compounds, reference to the method of preparation, date of preparation, expiration date and preparer's initials.

d) All containers of prepared reagents and standards bear a unique identifier and expiration date and are linked to the documentation requirements in Section 10.5.c above.

10.6 Computers and Electronic Data Related Requirements

Where computers, automated equipment, or microprocessors are used for the capture, processing, manipulation, recording, reporting, storage or retrieval of test data, Calscience ensures that:

a) All requirements of the NELAC Standard (i.e., Chapter 5 of NELAC) are met;

b) Computer software is tested and documented to be adequate for use, e.g., internal audits, personnel training, focus point of QA and QC;

c) Procedures are established and implemented for protecting the integrity of data. Such procedures include, but are not limited to, integrity of data entry or capture, data storage, data transmission and data processing;

d) Computer and automated equipment are maintained to ensure proper functioning and provided with the environmental and operating conditions necessary to maintain the integrity of calibration and test data; and

e) It establishes and implements appropriate procedures for the maintenance of security of data including the prevention of unauthorized access to, and the unauthorized amendment of, computer records.

11.0 SAMPLE HANDLING, SAMPLE ACCEPTANCE POLICY AND SAMPLE RECEIPT

While Calscience does not have control of field sampling activities, the following are essential to ensure the validity of the laboratory's data.

11.1 Sample Tracking

a) The laboratory has a documented system for uniquely identifying the items to be tested, to ensure that there can be no confusion regarding the identity of such items at any time. This system includes identification for all samples, subsamples and subsequent extracts and/or digestates. The laboratory assigns a unique identification (ID) code to each sample container received in the laboratory. (The use of container shape, size, or other physical characteristic, such as amber glass, or purple top, is not an acceptable means of identifying the sample.)

b) This laboratory code is maintained as an unequivocal link with the unique field ID code assigned each container.

c) The laboratory ID code is placed on the sample container as a durable label.

d) The laboratory ID code is entered into the laboratory records (see 11.3.d) and is the link that associates the sample with related laboratory activities such as sample preparation or calibration.

e) In cases where the sample collector and analyst are the same individual or the laboratory pre-assigns numbers to sample containers, the laboratory ID code may be the same as the field ID code.

11.2 Sample Acceptance Policy

The laboratory has a written sample acceptance policy that clearly outlines the circumstances under which samples are accepted or rejected. Data from any samples that do not meet the following criteria are flagged in an unambiguous manner, and the nature of the variation is clearly defined. The sample acceptance policy is available to sample collection personnel and includes, but is not limited to, the following areas of concern:

a) Proper, full, and complete documentation, that includes sample identification, the location, date and time of collection, collector's name, preservation type, sample type and any special remarks concerning the sample;

b) Proper sample labeling that includes a unique identification and a labeling system for the samples with requirements concerning the durability of the labels (water resistant) and the use of indelible ink;

c) Use of appropriate sample containers;

d) Adherence to specified holding times;

e) Adequate sample volume. Sufficient sample volume must be available to perform the necessary tests; and

f) Procedures to be used when samples show signs of damage, contamination or inadequate preservation.

11.3 Sample Receipt Protocols

a) Upon receipt, the condition of the sample, including any abnormalities or departures from standard condition as prescribed in the relevant test method, is recorded. All items specified in 11.2 above are checked.

   1) All samples that require cold temperature preservation are considered acceptable if the arrival temperature is within 2°C of the required temperature or the method-specified range. For

samples with a specified temperature of 4°C, samples with a temperature ranging from just above the freezing temperature of water to 6°C shall be acceptable. Samples that are hand delivered to the laboratory immediately after collection may not meet these criteria. In these cases, the samples shall be considered acceptable if there is evidence that the chilling process has begun, such as arrival on ice.

2) The laboratory shall implement procedures for checking chemical preservation using readily available techniques, such as pH or free chlorine, prior to or during sample preparation or analysis.

   With the exception of residual chlorine measurements in aquatic toxicity samples, certain measurements, such a pH, are performed and recorded just prior to analysis.

b) The results of all checks are recorded.

c) When there is any doubt as to the item's suitability for testing, when the sample does not conform to the description provided, and when the test required is not fully specified, the laboratory makes every attempt to consult the client for further instruction before proceeding. The laboratory establishes whether the sample has received all necessary preparation, or whether sample preparation has yet to be performed. If the sample does not meet the sample receipt acceptance criteria listed in this standard, the laboratory:

   1) Retains correspondence and/or records of conversations concerning the final disposition of rejected samples; or

   2) Fully documents any decision to commence with the analysis of samples not meeting acceptance criteria.

      i. The condition of these samples is, at a minimum, noted on the chain of custody record or transmittal form, and laboratory receipt documents.

      ii. The analysis data is/are appropriately "qualified" on the final report.

d) The laboratory utilizes a permanent chronological record such as a logbook or electronic database to document receipt of all sample containers.

   1) This sample receipt log records the following:

      i. Client/Project Name;

      ii. Date and time of laboratory receipt;

      iii. Unique laboratory ID code (see 11.1); and

      iv. Signature or initials of the person making the entries.

   2) During the login process, the following information is linked to the log record or included as a part of the log. If such information is recorded/documented elsewhere, that document becomes part of the laboratory's permanent records, easily retrievable upon request, and readily available to individuals who will process the sample. Note: The placement of the laboratory ID number on the sample container is not considered a permanent record.

      i. The field ID code that identifies each container is linked to the laboratory ID code in the sample receipt log.

ii. The date and time of sample collection is linked to the sample container and to the date and time of receipt in the laboratory.

iii. The requested analyses (including applicable approved test method numbers) are linked to the laboratory ID code.

iv. Any comments resulting from inspection for sample rejection are linked to the laboratory ID code.

e) All documentation (i.e., memos or transmittal forms) that are conveyed to the laboratory by the sample submitter is retained.

f) A complete chain of custody record form is maintained.

11.4 Storage Conditions

The laboratory has documented procedures and appropriate facilities to avoid deterioration, contamination, and damage to the sample during storage, handling, preparation, and testing; any relevant instructions provided with the item are followed. Where items must be stored or conditioned under specific environmental conditions, these conditions are maintained, monitored, and recorded.

a) Samples are stored according to the conditions specified by preservation protocols:

1) Samples that require thermal preservation are stored under refrigeration at +/-2° of the specified preservation temperature unless method-specified criteria exist. For samples with a specified storage temperature of 4°C, storage at a temperature above the freezing point of water to 6°C is acceptable.

2) Samples are stored away from all standards, reagents, food, and other potentially contaminating sources. Samples are stored in such a manner to prevent cross contamination.

b) Sample fractions, extracts, leachates, and other sample preparation products are stored according to 11.4.a above or according to specifications in the test method.

c) When a sample or portion of a sample needs to be held secure (for example, for reasons of record, safety or value, or to enable check calibrations or tests to be performed later), the laboratory has storage and security arrangements that protect the condition and integrity of the secured items or portions concerned.

11.5 Sample Disposal

The laboratory has standard operating procedures for the disposal of samples, digestates, leachates and extracts or other sample preparation products.

12.0 RECORDS

The laboratory maintains a record system to suit its particular circumstances and comply with any applicable regulations. The system produces unequivocal, accurate records that document all laboratory activities. The laboratory retains all original observations, calculations and derived data, calibration records and a copy of the test report for a minimum of five years.

There are two levels of sample handling: 1) sample tracking and 2) legal chain of custody protocols that are used for evidentiary or legal purposes. All essential requirements for sample tracking (e.g., chain of custody form) are outlined in Sections 12.1, 12.2 and 12.3. Calscience has a written SOP that describes how it will carry out legal chain of custody for example, ASTM D 4840-95 and Manual for the Certification of Laboratories Analyzing Drinking Water, March 1997, Appendix A.

12.1 Record Keeping System and Design

The Calscience record keeping system allows historical reconstruction of all laboratory activities that produced the analytical data. The history of the sample is readily understood through the documentation. This includes inter-laboratory transfers of samples and/or extracts.

a) The records include the identity of personnel involved in sampling, sample receipt, preparation, calibration or testing.

b) All information relating to the laboratory facilities equipment, analytical test methods, and related laboratory activities, such as sample receipt, sample preparation, or data verification, are documented.

c) The record keeping system facilitates the retrieval of all working files and archived records for inspection and verification purposes, e.g., set format for naming electronic files.

d) All changes to records are signed or initialed by responsible staff. The reason for the signature or initials is clearly indicated in the records such as "sampled by," "prepared by," or "reviewed by."

e) All generated data, except those that are generated by automated data collection systems, are recorded directly, promptly, and legibly in permanent ink.

f) Entries in records are not be obliterated by methods such as erasures, overwritten files or markings. All corrections to record-keeping errors are made by one line marked through the error. The individual making the correction signs (or initials) and dates the correction. These criteria also apply to electronically maintained records.

g) Refer to 10.6 for Computer and Electronic Data.

12.2 Records Management and Storage

a) All records (including those pertaining to calibration and test equipment), certificates and reports are safely stored, and held secure and in confidence to the client. NELAP-related records are available to the accrediting authority.

b) All records, including those specified in Section 12.3, are retained for a minimum of five years from generation of the last entry in the records. The laboratory maintains all information necessary for the historical reconstruction of data. Records stored only on electronic media are supported by the hardware and software necessary for their retrieval.

c) Records that are stored or generated by computers or personal computers have hard copy or write-protected backup copies.

d) The laboratory has an established record management system for control of laboratory notebooks, instrument logbooks, standards logbooks, and records for data reduction, validation storage and reporting.

e) Access to archived information is documented with an access log. These records are protected against fire, theft, loss, environmental deterioration, vermin, and in the case of electronic records, electronic or magnetic sources.

f) The laboratory has a plan to ensure that the records are maintained or transferred according to the clients' instructions (see 4.1.8.e of NELAC) in the event that a laboratory transfers ownership or goes out of business. In all cases, appropriate regulatory and state legal requirements concerning laboratory records must be followed.

12.3 Laboratory Sample Tracking

12.3.1 Sample Handling

A record of all procedures to which a sample is subjected while in Calscience's possession is maintained. These include but are not limited to all records pertaining to:

a) Sample preservation, including appropriateness of sample container and compliance with holding time requirement;

b) Sample identification, receipt, acceptance or rejection, and log-in;

c) Sample storage and tracking, including shipping receipts, sample transmittal forms (chain of custody form); and

d) Documentation procedures for the receipt and retention of test items, including all provisions necessary to protect the integrity of samples.

12.3.2 Laboratory Support Activities

In addition to documenting all the above-mentioned activities, the following is retained:

a) All original raw data, whether hard copy or electronic, for calibrations, samples and quality control measures, including analysts work sheets and data output records (chromatograms, strip charts, and other instrument response readout records);

b) A written description or reference to the specific test method used, which includes a description of the specific computational steps used to translate parametric observations into a reportable analytical value;

c) Copies of final reports;

d) Archived standard operating procedures;

e) Correspondence relating to laboratory activities for a specific project;

f) All corrective action reports, audits and audit responses;

g) Proficiency test results and raw data; and,

h) Results of data review, verification, and cross-checking procedures.

12.3.3 Analytical Records

The essential information associated with analyses, such as strip charts, tabular printouts, computer data files, analytical notebooks, and run logs, include:

a) Laboratory sample ID code;

b) Date of analysis and time of analysis if the method-specified holding time is 72 hours or less, or when time critical steps are included in the analysis, e.g., extractions, and incubations;

c) Instrument identification and instrument operating conditions/parameters (or reference to such data);

d) Analysis type;

e) All manual calculations e.g., manual integrations;

f) Analyst's or operator's initials/signature;

g) Sample preparation including cleanup, separation protocols, incubation periods or subculture, ID codes, volumes, weights, instrument printouts, meter readings, calculations, reagents;

h) Sample analysis;

i) Standard and reagent origin, receipt, preparation, and use;

j) Calibration criteria, frequency and acceptance criteria;

k) Data and statistical calculations, review, confirmation, interpretation, assessment and reporting conventions;

l) Quality control protocols and assessment;

m) Electronic data security, software documentation and verification, software and hardware audits, backups, and records of any changes to automated data entries; and

n) Method performance criteria including expected quality control requirements.

12.3.4 Administrative Records

The following are maintained:

a) Personnel qualifications, experience and training records;

b) Records of demonstration of capability for each analyst; and

c) A log of names, initials and signatures for all individuals who are responsible for signing or initialing any laboratory record.

13.0 LABORATORY REPORT FORMAT AND CONTENTS

The results of each test, or series of tests carried out by the laboratory must be reported accurately, clearly, unambiguously and objectively. The results normally reported in a test report and include all the information necessary for the interpretation of the test results and all information required by the method used. Some regulatory reporting requirements or formats, such as monthly operating reports may not require all items listed below, however, Calscience will provide all the required information to their client for use in preparing such regulatory reports.

a) Except as discussed in 13.b, each report to an outside client includes at least the following information (those prefaced with "where relevant" are not mandatory):

1) A title, e.g., "Test Report," or "Test Certificate," "Certificate of Results" or "Laboratory Results";

2) Name and address of laboratory, and location where the test was carried out if different from the address of the laboratory and phone number with name of contact person for questions;

3) Unique identification of the certificate or report (such as serial number) and of each page, and the total number of pages;

   This requirement may be presented in several ways:

   i. The total number of pages may be listed on the first page of the report as long as the subsequent pages are identified by the unique report identification and consecutive numbers, or

   ii. Each page is identified with the unique report identification, the pages are identified as a number of the total report pages (example: 3 of 10, or 1 of 20).

   Other methods of identifying the pages in the report may be acceptable as long as it is clear to the reader that discrete pages are associated with a specific report, and that the report contains a specified number of pages.

4) Name and address of client, where appropriate and project name if applicable;

5) Description and unambiguous identification of the tested sample including the client identification code;

6) Identification of test results derived from any sample that did not meet NELAC sample acceptance requirements such as improper container, holding time, or temperature;

7) Date of receipt of sample, date and time of sample collection, date(s) of performance test, and time of sample preparation and/or analysis if the required holding time for either activity is less than or equal to 72 hours;

8) Identification of the test method used, or unambiguous description of any nonstandard method used;

9) If the laboratory collected the sample, reference to sampling procedure;

10) Any deviations from (such as failed quality control), additions to or exclusions from the test method (such as environmental conditions), and any nonstandard conditions that may have affected the quality of results, and including the use and definitions of data qualifiers.

11) Measurements, examinations and derived results, supported by tables, graphs, sketches, and photographs as appropriate, and any failures identified; identify whether data are calculated on a dry weight or wet weight basis; identify the reporting units such as µg/l or mg/kg;

12) When required, a statement of the estimated uncertainty of the test results;

13) A signature and title, or an equivalent electronic identification of the person(s) accepting responsibility for the content of the certificate or report (however produced), and date of issue;

14) At the Calscience's discretion, a statement to the effect that the results relate only to the items tested or to the sample as received by the laboratory;

15) At the Calscience's discretion, a statement that the certificate or report shall not be reproduced except in full, without the written approval of the laboratory;

16) Clear identification of all test data provided by outside sources, such as subcontracted laboratories, clients, etc.; and

17) Clear identification of numerical results with values outside of quantitation limits.

b) Where the certificate or report contains results of tests performed by subcontractors, these results are clearly identified by subcontractor name or applicable accreditation number.

c) After issuance of the report, the laboratory report remains unchanged. Material amendments to a calibration certificate, test report or test certificate after issue may be made only in the form of a further document, or data transfer, including the statement "Supplement to Test Report or Test Certificate, serial number . . . [or as otherwise identified]", or equivalent form of wording. Such amendments meet all the relevant requirements of the NELAC Standard.

d) Calscience notifies clients promptly, in writing, of any event such as the identification of defective measuring or test equipment that casts doubt on the validity of results given in any calibration certificate, test report or test certificate or amendment to a report or certificate.

e) The laboratory will, where clients require transmission of test results by telephone, telex, facsimile or other electronic or electromagnetic means, follow documented procedures that ensure that the requirements of this Standard are met and that confidentiality is preserved.

f) Calscience will certify that all its NELAC-certified test results reported meet all requirements of NELAC or provide reasons and/or justification if they do not.

14.0 SUBCONTRACTING ANALYTICAL SAMPLES

a) Calscience will advise its client in writing of its intention to subcontract any portion of the testing to another party.

b) When it is deemed necessary for Calscience to subcontract any part of a test covered under NELAP, the work shall only be placed with a laboratory accredited under NELAP for the tests to be performed.

c) Calscience retains records demonstrating that the above requirements have been met.

15.0 OUTSIDE SUPPORT SERVICES AND SUPPLIES

Calscience does not procure outside services and supplies, other than those referred to in this Manual.

16.0 COMPLAINTS

Calscience SOP-T018 addresses the policies and procedures for the resolution of complaints received from clients or other parties about the laboratory's activities. Where a complaint, or any other circumstance, raises doubt concerning the laboratory's compliance with the laboratory's policies or procedures, or with the requirements of this manual or otherwise concerning the quality of the laboratory's

calibrations or tests, the laboratory shall ensure that those areas of activity and responsibility involved are promptly audited in accordance with NELAC Section 5.3.1. Records of the complaint and subsequent actions are maintained.

NELAC APPENDICES

APPENDIX A - REFERENCES

NELAC Standards, Chapters 1-6. June 29, 2000.

40 CFR Part 136, Appendix A, paragraphs 8.1.1 and 8.2.

American Association for Laboratory Accreditation April 1996. General Requirements for Accreditation.

"American National Standards Specification and Guidelines for Quality Systems for Environmental Data Collection and Environmental Technology Programs (ANSI/ASQC E-4)," 1994.

ASTM E1598-94 Conducting Early Seedling Growth Tests, American Society for Testing and Materials, West Conshocken, PA 1999.

ASTM E11676-97 Conducting a Laboratory Soil Toxicity Test with Lumbricid Earthworm *Eisenia foetida*, American Society for Testing and Materials, West Conshocken, PA 1999.

Catalog of Bacteria, American Type Culture Collection, Rockville, MD.

EPA 2185 - Good Automated Laboratory Practices, 1995 available at www.epa.gov/docs/etsdwe1/irm_galp/

EPA/600/3-89/013 Ecological Assessment of Hazardous Waste Sites, Office of Research and Development, Washington, DC, 1991.

EPA/503/8-91/001 Evaluation of Dredged Material Proposed for Ocean Disposal – Testing Manual. Office of Water, Washington, DC, 1991.

EPA/600/4-90/031 Manual for Evaluation of Laboratories Performing Aquatic Toxicity Tests, Office of Research and Development, Washington, DC, 1991.

EPA/600/3-88/029 Protocol for Short-term Toxicity Screening of Hazardous Wastes, Office of Research and Development, Washington, DC, 1991.

EPA/600/4-90/027F Methods for Measuring the Acute Toxicity of Effluents and Receiving Waters to Freshwater and Marine Organisms, 4th Ed., Office of Research and Development, Washington, DC, 1993.

EPA/823/B-98/004 Evaluation of Dredged Material Proposed for Discharge in Waters of the U.S. – Inland Testing Manual. Office of Water, Washington, DC, 1994.

EPA/600/R-94/025 Methods for Assessing the Toxicity of Sediment-associated Contaminants with Estuarine and Marine Amphipods, Office of Research and Development, Washington, DC, 1994.

EPA/600/R-94/024 Methods for Measuring the Toxicity and Bioaccumulation of Sediment-associated Contaminants with Freshwater Invertebrates, Office of Research and Development, Washington, DC, 1994.

EPA/600/4-91/002 Short-term Methods for Estimating the Chronic Toxicity of Effluents and Receiving Waters to Freshwater Organisms, 3rd Ed., Office of Research and Development, Washington, DC, 1994.

EPA/600/4-91/003 Short-term Methods for Estimating the Chronic Toxicity of Effluents and Receiving Water to Marine and Estuarine Organisms, 2nd Ed., Office of Research and Development, Washington, DC, 1994.

"Glossary of Quality Assurance Terms and Acronyms," Quality Assurance Division, Office of Research and Development, USEPA.

"Guidance on the Evaluation of Safe Drinking Water Act Compliance Monitoring Results from Performance Based Methods," September 30, 1994, Second draft.

International vocabulary of basic and general terms in metrology (VIM): 1984. Issued by BIPM, IEC, ISO and OIML.

ISO Guide 3534-1: "Statistics, vocabulary and symbols - Part 1: Probability and general statistical terms."

ISO Guide 7218: Microbiology - General Guidance for Microbiological Examinations.

ISO Guide 8402: 1986. Quality – Vocabulary.

ISO Guide 9000: 1994. Quality management and quality assurance standards - Guidelines for selection and use.

ISO Guide 9001: 1994. Quality Systems - Model for quality assurance in design/development, production, installation and servicing

ISO Guide 9002: 1994. Quality systems - Model for quality assurance in production and installation.

ISO/IEC Guide 2: 1986. General terms and their definitions concerning standardization and related activities.

ISO/IEC Guide 25: 1990. General requirements for the competence of calibration and testing laboratories.

"Laboratory Biosafety Manual," World Health Organization, Geneva, 1983.

Manual for the Certification of Laboratories Analyzing Drinking Water, Revision 4, EPA 815-B-97-001.

Manual of Method for General Bacteriology, Philipp Gerhard et al., American Society for Microbiology, Washington, D.C. 1981.

Performance Based Measurement System, EPA EMMC Method Panel, PBMS Workgroup, 1996.

APPENDIX B - GLOSSARY

The following definitions are used in the text of Quality Systems. In writing this document, the following hierarchy of definition references were used: ISO 8402, ANSI/ASQC E-4, EPA's Quality Assurance Division Glossary of Terms, and finally definitions developed by NELAC. The source of each definition, unless otherwise identified, is the Quality Systems Committee.

Acceptance Criteria: Specified limits placed on characteristics of an item, process, or service defined in requirement documents. (ASQC)

Accreditation: The process by which an agency or organization evaluates and recognizes a laboratory as meeting certain predetermined qualifications or standards, thereby accrediting the laboratory. In the context of the National Environmental Laboratory Accreditation Program (NELAP), this process is a voluntary one. (NELAC)

Accrediting Authority: The Territorial, State, or Federal agency having responsibility and accountability for environmental laboratory accreditation and which grants accreditation. (NELAC) [1.5.2.3]

Accuracy: T he degree of agreement between an observed value and an accepted reference value. Accuracy includes a combination of random error (precision) and systematic error (bias) components which are due to sampling and analytical operations; a data quality indicator. (QAMS)

Analysis Duplicate: The second measurement of the target analyte(s) performed on a single sample or sample preparation.

Analyst: The designated individual who performs the "hands-on" analytical methods and associated techniques and who is the one responsible for applying required laboratory practices and other pertinent quality controls to meet the required level of quality. (NELAC)

Analytical Reagent (AR) Grade: Designation for the high purity of certain chemical reagents and solvents given by the American Chemical Society. (Quality Systems)

Assessment: The evaluation process used to measure or establish the performance, effectiveness, and conformance of an organization and/or its systems to defined criteria (to the standards and requirements of NELAC). (NELAC)

Audit: A systematic evaluation to determine the conformance to quantitative and qualitative specifications of some operational function or activity. (EPA-QAD)

Batch: Environmental samples, which are prepared and/or analyzed together with the same process and personnel using the same lot(s) of reagents. A **preparation batch** is composed of one to 20 environmental samples of the same NELAC-defined m atrix, m eeting t he a bove-mentioned c riteria and with a maximum time between the start of processing of the first and last sample in the batch to be 24 hours. An **analytical batch** is c omposed o f p repared e nvironmental samples (extracts, digestates or concentrates) which are analyzed together as a group. An analytical batch can include prepared samples originating from various environmental matrices and can exceed 20 samples. (NELAC Quality Systems Committee)

Blank: A sample that has not been exposed to the analyzed sample stream in order to monitor contamination during sampling, transport, storage or analysis. The blank is subjected to the usual analytical and measurement process to establish a zero baseline or background value and is sometimes used to adjust or correct routine analytical results. (ASQC)

Blind Sample: A sub-sample for analysis with a composition known to the submitter. The analyst/ laboratory may know the identity of the sample but not its composition. It is used to test the analyst's or laboratory's proficiency in the execution of the measurement process. (NELAC)

Calibration: To determine, by measurement or comparison with a standard, the correct value of each scale reading on a meter or other device. The levels of the applied calibration standard should bracket the range of planned or expected sample measurements. (NELAC)

Calibration Curve: The graphical relationship between the known values, such as concentrations, of a series of calibration standards and their instrument response. (NELAC)

Calibration Method: A defined technical procedure for performing a calibration. (NELAC)

Calibration Standard: A substance or reference material used to calibrate an instrument. (QAMS)

Certified Reference Material (CRM): A reference material one or more of whose property values are certified by a technically valid procedure, accompanied by or traceable to a certificate or other documentation which is issued by a certifying body. (ISO Guide 30 - 2.2)

Chain of Custody Form: A record that documents the possession of the samples from the time of collection to receipt in the laboratory. This record generally includes: the number and types of containers; the mode of collection; collector; time of collection; preservation; and requested analyses. (NELAC)

Compromised Samples: Those samples which are improperly sampled, insufficiently documented (chain of custody and other sample records and/or labels), improperly preserved, collected in improper containers, or exceeding holding times when delivered to a laboratory. Under normal conditions compromised samples are not analyzed. If emergency situations require analysis, the results must be appropriately qualified. (NELAC)

Confirmation: Verification of the identity of a component through the use of an approach with a different scientific principle from the original method. These may include, but are not limited to:

- Second column confirmation;
- Alternate wavelength;
- Derivatization;
- Mass spectral interpretation;
- Alternative detectors; or
- Additional cleanup procedures. (NELAC)

Conformance: An affirmative indication or judgment that a product or service has met the requirements of the relevant specifications, contract, or regulation; also the state of meeting the requirements. (ANSI/ ASQC E4-1994)

Corrective Action: The action taken to eliminate the causes of an existing nonconformity, defect or other undesirable situation in order to prevent recurrence. (ISO 8402)

Data Audit: A qualitative and quantitative evaluation of the documentation and procedures associated with environmental measurements to verify that the resulting data are of acceptable quality (i.e., that they meet specified acceptance criteria). (NELAC)

Data Reduction: The process of transforming raw data by arithmetic or statistical calculations, standard curves, concentration factors, etc., and collation into a more useable form. (EPA-QAD)

Deficiency: An unauthorized deviation from acceptable procedures or practices, or a defect in an item. (ASQC)

Demonstration of Capability: A procedure to establish the ability of the analyst to generate acceptable accuracy. (NELAC)

Desorption Efficiency: The mass of target analyte recovered from sampling media, usually a sorbent tube, divided by the mass of target analyte spiked on to the sampling media expressed as a percentage. Sample target analyte masses are usually adjusted for the desorption efficiency. (NELAC)

Detection Limit: The lowest concentration or amount of the target analyte that can be identified, measured, and reported with confidence that the analyte concentration is not a false positive value. See Method Detection Limit. (NELAC)

Document Control: The act of ensuring that documents (and revisions thereto) are proposed, reviewed for accuracy, approved for release by authorized personnel, distributed properly and controlled to ensure use of the correct version at the location where the prescribed activity is performed. (ASQC)

Duplicate Analyses: The analyses or measurements of the variable of interest performed identically on two subsamples of the same sample. The results from duplicate analyses are used to evaluate analytical or measurement precision but not the precision of sampling, preservation or storage internal to the laboratory. (EPA- QAD)

Holding Times (Maximum Allowable Holding Times): The maximum times that samples may be held prior to analysis and still be considered valid or not compromised. (40 CFR Part 136)

Inspection: An activity such as measuring, examining, testing, or gauging one or more characteristics of an entity and comparing the results with specified requirements in order to establish whether conformance is achieved for each characteristic. (ANSI/ ASQC E4-1994)

Internal Standard: A known amount of standard added to a test portion of a sample as a reference for evaluating and controlling the precision and bias of the applied analytical method. (NELAC)

Instrument Blank: A clean sample (e.g., distilled water) processed through the instrumental steps of the measurement process; used to determine instrument contamination. (EPA-QAD)

Laboratory: A body that calibrates and/or tests. (ISO 25)

Laboratory Control Sample (however named, such as laboratory fortified blank, spiked blank, or QC check sample): A sample matrix, free from the analytes of interest, spiked with verified known amounts of analytes or a material containing known and verified amounts of analytes. It is generally used to establish intra-laboratory or analyst-specific precision and bias or to assess the performance of all or a portion of the measurement system. (NELAC)

Laboratory Duplicate: Aliquots of a sample taken from the same container under laboratory conditions and processed and analyzed independently. (NELAC)

Limit of Detection (LOD): The lowest concentration level that can be determined by a single analysis and with a defined level of confidence to be statistically different from a blank. See also Method Detection Limit, Detection Limit, and Quantitation Limit. (Analytical Chemistry, 55, p. 2217, December 1983, modified)

Manager (however named): The individual designated as being responsible for the overall operation, all personnel, and the physical plant of the environmental laboratory. A supervisor may report to the manager. In some cases, the supervisor and the manager may be the same individual. (NELAC)

Matrix: The component or substrate that contains the analyte of interest. For purposes of batch and QC requirement determinations, the following matrix distinctions shall be used:

- Aqueous: Any aqueous sample excluded from the definition of Drinking Water matrix or Saline/Estuarine source. Includes surface water, groundwater, effluents, and TCLP or other extracts.
- Drinking Water: Any aqueous sample that has been designated a potable or potential potable water source.
- Saline/Estuarine: Any aqueous sample from an ocean or estuary, or other salt water source such as the Great Salt Lake.
- Non-aqueous Liquid: Any organic liquid with <15% settleable solids.
- Biological Tissue: Any sample of a biological origin such as fish tissue, shellfish, or plant material. Such samples shall be grouped according to origin.
- Solids: Includes soils, sediments, sludges and other matrices with >15% settleable solids.
- Chemical Waste: A product or by-product of an industrial process that results in a matrix not previously defined.
- Air: Whole gas or vapor samples including those contained in flexible or rigid wall containers and the extracted concentrated analytes of interest from a gas or vapor that are collected with a sorbent tube, impinger solution, filter or other device. (NELAC)

Matrix Spike (spiked sample or fortified sample): A sample prepared by adding a known mass of target analyte to a specified amount of matrix sample for which an independent estimate of target analyte concentration is available. Matrix spikes are used, for example, to determine the effect of the matrix on a method's recovery efficiency. (QAMS)

Matrix Spike Duplicate (spiked sample or fortified sample duplicate): A second replicate matrix spike prepared in the laboratory and analyzed to obtain a measure of the precision of the recovery for each analyte. (QAMS)

May: Denotes permitted action, but not required action. (NELAC)

Media: Material that supports the growth of a microbiological culture.

Method Blank: A sample of a matrix similar to the batch of associated samples (when available) that is free from the analytes of interest and is processed simultaneously with and under the same conditions as samples through all steps of the analytical procedures, and in which no target analytes or interferences are present at concentrations that impact the analytical results for sample analyses. (NELAC)

Method Detection Limit: The minimum concentration of a substance (an analyte) that can be measured and reported with 99% confidence that the analyte concentration is greater than zero and is determined from analysis of a sample in a given matrix containing the analyte. (40 CFR Part 136 Appendix B)

Must: Denotes a requirement that must be met. (Random House College Dictionary)

National Accreditation Database: The publicly accessible database listing the accreditation status of all laboratories participating in NELAP. (NELAC)

National Environmental Laboratory Accreditation Conference (NELAC): A voluntary organization of State and Federal environmental officials and interest groups purposed primarily to establish mutually acceptable standards for accrediting environmental laboratories. A subset of NELAP. (NELAC)

National Environmental Laboratory Accreditation Program (NELAP): The overall National Environmental Laboratory Accreditation Program of which NELAC is a part. (NELAC)

Negative Control: Measures taken to ensure that a test, its components, or the environment do not cause undesired effects, or produce incorrect test results. (NELAC)

Objective Evidence: Any documented statement of fact, other information, or record, either quantitative or qualitative, pertaining to the quality of an item or activity, based on observations, measures, or tests that can be verified. (ASQC)

Performance Audit: The routine comparison of independently obtained qualitative and quantitative measurement system data with routinely obtained data in order to evaluate the proficiency of an analyst or laboratory. (NELAC)

Performance Based Measurement System (PBMS): A set of processes wherein the data quality needs, mandates or limitations of a program or project are specified and serve as criteria for selecting appropriate test methods to meet those needs in a cost-effective manner. (NELAC)

Positive Control: Measures taken to ensure that a test and/or its components are working properly and producing correct or expected results from positive test subjects. (NELAC)

Precision: The degree to which a set of observations or measurements of the same property, obtained under similar conditions, conform to themselves; a data quality indicator. Precision is usually expressed as standard deviation, variance or range, in either absolute or relative terms. (NELAC)

Preservation: Refrigeration and/or reagents added at the time of sample collection (or later) to maintain the chemical and/or biological integrity of the sample. (NELAC)

Proficiency Testing: A means of evaluating a laboratory's performance under controlled conditions relative to a given set of criteria through analysis of unknown samples provided by an external source. (NELAC) [2.1]

Proficiency Testing Program: The aggregate of providing rigorously controlled and standardized environmental samples to a laboratory for analysis, reporting of results, statistical evaluation of the results and the collective demographics and results summary of all participating laboratories. (NELAC)

Proficiency Test Sample (PT): A sample, the composition of which is unknown to the analyst and is provided to test whether the analyst/laboratory can produce analytical results within specified acceptance criteria. (QAMS)

Protocol: A detailed written procedure for field and/or laboratory operation (e.g., sampling, and analysis) which must be strictly followed. (EPA- QAD)

Pure Reagent Water: Shall be water (defined by national or international standard) in which no target analytes or interferences are detected as required by the analytical method. (NELAC)

Quality Assurance: An integrated system of activities involving planning, quality control, quality assessment, reporting and quality improvement to ensure that a product or service meets defined standards of quality with a stated level of confidence. (QAMS)

Quality Assurance (Project) Plan (QAPP): A formal document describing the detailed quality control procedures by which the quality requirements defined for the data and decisions pertaining to a specific project are to be achieved. (EPA-QAD)

Quality Control: The overall system of technical activities whose purpose is to measure and control the quality of a product or service so that it meets the needs of users. (QAMS)

Quality Control Sample: An uncontaminated sample matrix with known amounts of analytes from a source independent from the calibration standards. It is generally used to establish intra-laboratory or analyst specific precision and bias or to assess the performance of all or a portion of the measurement system. (EPA-QAD)

Quality Manual: A document stating the management policies, objectives, principles, organizational structure and authority, responsibilities, accountability, and implementation of an agency, organization, or laboratory, to ensure the quality of its product and the utility of its product to its users. (NELAC)

Quality System: A structured and documented management system describing the policies, objectives, principles, organizational authority, responsibilities, accountability, and implementation plan of an organization for ensuring quality in its work processes, products (items), and services. The quality system provides the framework for planning, implementing, and assessing work performed by the organization and for carrying out required QA and QC. (ANSI/ ASQC E-41994)

Quantitation Limits: Levels, concentrations, or quantities of a target variable (e.g., target analyte) that can be reported at a specific degree of confidence. (NELAC)

Range: The difference between the minimum and the maximum of a set of values. (EPA-QAD)

Raw Data: Any original factual information from a measurement activity or study recorded in a laboratory notebook, worksheets, records, memoranda, notes, or exact copies thereof that are necessary for the reconstruction and evaluation of the report of the activity or study. Raw data may include photography, microfilm or microfiche copies, computer printouts, magnetic media, including dictated observations, and recorded data from automated instruments. If exact copies of raw data have been prepared (e.g., tapes which have been transcribed verbatim, data and verified accurate by signature), the exact copy or exact transcript may be submitted. (EPA-QAD)

Reagent Blank (method reagent blank): A sample consisting of reagent(s), without the target analyte or sample matrix, introduced into the analytical procedure at the appropriate point and carried through all subsequent steps to determine the contribution of the reagents and of the involved analytical steps. (QAMS)

Record Retention: The systematic collection, indexing and storing of documented information under secure conditions. (EPA-QAD)

Reference Material: A material or substance one or more properties of which are sufficiently well established to be used for the calibration of an apparatus, the assessment of a measurement method, or for assigning values to materials. (ISO Guide 30- 2.1)

Reference Method: A method of known and documented accuracy and precision issued by an organization recognized as competent to do so. (NELAC)

Reference Standard: A standard, generally of the highest metrological quality available at a given location, from which measurements made at that location are derived. (VIM-6.08)

Reference Toxicant: The toxicant used in performing toxicity tests to indicate the sensitivity of a test organism and to demonstrate the laboratory's ability to perform the test correctly and obtain consistent results (see Chapter 5, Appendix D, Section 2.1.f). (NELAC)

Replicate Analyses: The measurements of the variable of interest performed identically on two or more sub-samples of the same sample within a short time interval. (NELAC)

Requirement: Denotes a mandatory specification; often designated by the term "shall". (NELAC)

Sampling Media: Material used to collect and concentrate the target analytes(s) during air sampling such as solid sorbents, filters, or impinger solutions.

Selectivity: (Analytical chemistry) The capability of a test method or instrument to respond to a target substance or constituent in the presence of non-target substances. (EPA-QAD)

Sensitivity: The capability of a method or instrument to discriminate between measurement responses representing different levels (e.g., concentrations) of a variable of interest. (NELAC)

Shall: Denotes a requirement that is mandatory whenever the criterion for conformance with the specification requires that there be no deviation. This does not prohibit the use of alternative approaches or methods for implementing the specification so long as the requirement is fulfilled. (ANSI)

Should: Denotes a guideline or recommendation whenever noncompliance with the specification is permissible. (ANSI)

Spike: A known mass of target analyte added to a blank sample or sub-sample; used to determine recovery efficiency or for other quality control purposes. (NELAC)

Standard: The document describing the elements of laboratory accreditation that has been developed and established within the consensus principles of NELAC and meets the approval requirements of NELAC procedures and policies. (ASQC)

Standard Operating Procedure (SOP): A written document which details the method of an operation, analysis or action whose techniques and procedures are thoroughly prescribed and which is accepted as the method for performing certain routine or repetitive tasks. (QAMS)

Standardized Reference Material (SRM): A certified reference material produced by the U.S. National Institute of Standards and Technology or other equivalent organization and characterized for absolute content, independent of analytical method. (EPA-QAD)

Supervisor (however named): The individual(s) designated as being responsible for a particular area or category of scientific analysis. This responsibility includes direct day-to-day supervision of technical employees, supply and instrument adequacy and upkeep, quality assurance/quality control duties and ascertaining that technical employees have the required balance of education, training and experience to perform the required analyses. (NELAC)

Surrogate: A substance with properties that mimic the analyte of interest. It is unlikely to be found in environment samples and is added to them for quality control purposes. (QAMS)

Systems Audit (also Technical Systems Audit): A thorough, systematic, qualitative on-site assessment of the facilities, equipment, personnel, training, procedures, record keeping, data validation, data management, and reporting aspects of a total measurement system. (EPA-QAD)

Technical Director: Individual(s) who has overall responsibility for the technical operation of the environmental testing laboratory. (NELAC)

Test: A technical operation that consists of the determination of one or more characteristics or performance of a given product, material, equipment, organism, physical phenomenon, process or service according to a specified procedure. The result of a test is normally recorded in a document sometimes called a test report or a test certificate. (ISO/IEC Guide 2-12.1, amended)

Test Method: An adoption of a scientific technique for a specific measurement problem, as documented in a laboratory SOP. (NELAC)

Testing Laboratory: Laboratory that performs tests. (ISO/ IEC Guide 2 - 12.4)

Test Sensitivity/Power: The minimum significant difference (MSD) between the control and test concentration that is statistically significant. It is dependent on the number of replicates per concentration, the selected significance level, and the type of statistical analysis (see Chapter 5, Appendix D, Section 2.4.a). (NELAC)

Tolerance Chart: A chart in which the plotted quality control data is assessed via a tolerance level (e.g. +/- 10% of a mean) based on the precision level judged acceptable to meet overall quality/data use requirements instead of a statistical acceptance criteria (e.g. +/- 3 sigma) (applies to radiobioassay laboratories). (ANSI)

Traceability: The property of a result of a measurement whereby it can be related to appropriate standards, generally international or national standards, through an unbroken chain of comparisons. (VIM - 6.12)

Validation: The process of substantiating specified performance criteria. (EPA- QAD)

Verification: Confirmation by examination and provision of evidence that specified requirements have been met. (NELAC)

NOTE: In connection with the management of measuring equipment, verification provides a means for checking that the deviations between values indicated by a measuring instrument and corresponding known values of a measured quantity are consistently smaller than the maximum allowable error defined in a standard, regulation or specification peculiar to the management of the measuring equipment.

The result of verification leads to a decision either to restore in service, to perform adjustment, to repair, to downgrade, or to declare obsolete. In all cases, it is required that a written trace of the verification performed shall be kept on the measuring instrument's individual record.

Work Cell: A well-defined group of analysts that together perform the method analysis. The members of the group and their specific functions within the work cell must be fully documented. (NELAC)

Sources:

American Society for Quality Control (ASQC), Definitions of Environmental Quality Assurance Terms, 1996

American National Standards Institute (ANSI), Style Manual for Preparation of Proposed American National Standards, Eighth Edition, March 1991

ANSI/ASQC E4, 1994

ANSI N42.23- 1995, Measurement and Associated Instrument Quality Assurance for Radiobioassay Laboratories

International Standards Organization (ISO) Guides 2, 30, 8402

International Vocabulary of Basic and General Terms in Metrology (VIM): 1984. Issued by BIPM, IEC, ISO and OIML

National Institute of Standards and Technology (NIST)

National Environmental Laboratory Accreditation Conference (NELAC), July 1998 Standards

Random House College Dictionary

U.S. EPA Quality Assurance Management Section (QAMS), Glossary of Terms of Quality Assurance Terms, 8/31/92 and 12/6/95

U.S. EPA Quality Assurance Division (QAD)

40 CFR, Part 136

Webster's New World Dictionary of the American Language

APPENDIX C - DEMONSTRATION OF CAPABILITY

C.1 PROCEDURE FOR DEMONSTRATION OF CAPABILITY

A demonstration of capability (DOC) must be made prior to using any test method, and at any time there is a change in instrument type, personnel or test method. (See NELAC 10.2.1.)

Note: Where tests are performed by specialized "work cells" (a well-defined group of analysts that together perform the method analysis), the work cell as a unit meets the above criteria and this demonstration is fully documented.

In general, this demonstration does not test the performance of the method in real world samples, but in the applicable and available clean matrix (a sample of a matrix in which no target analytes or interferences are present at concentrations that impact the results of a specific test method), e.g., water, solids and air. However, before any results are reported using this method, actual sample spike results may be used to meet this standard, i.e., at least four consecutive matrix spikes within the last twelve months. In addition, for analytes that do not lend themselves to spiking, e.g., TSS, the demonstration of capability may be performed using quality control samples.

All demonstrations shall be documented through the use of the form in this appendix.

The following steps, which are adapted from the EPA test methods published in 40 CFR Part 136, Appendix A, are performed if required by mandatory test method or regulation. Note: For analytes for which spiking is not an option and for which quality control samples are not readily available, the 40 CFR approach is one way to perform this demonstration. The laboratory documents that other approaches to DOC are adequate, and this is documented in the laboratory's Quality Manual.

a) A quality control sample is obtained from an outside source. If not available, the QC sample may be prepared by the laboratory using stock standards that are prepared independently from those used in instrument calibration.

b) The analyte(s) is diluted in a volume of clean matrix sufficient to prepare four aliquots at the concentration specified, or if unspecified, to a concentration approximately 10 times the method-stated or laboratory-calculated method detection limit.

c) At least four aliquots are prepared and analyzed according to the test method either concurrently or over a period of days.

d) Using all of the results, the mean recovery ($\overline{X}$) is calculated in the appropriate reporting units (such as µg/L) and the standard deviations of the population sample (n-1) (in the same units) for each parameter of interest. When it is not possible to determine mean and standard deviations, such as for presence/absence and logarithmic values, the laboratory will assess performance against established and documented criteria.

e) Compare the information from (d) above to the corresponding acceptance criteria for precision and accuracy in the test method (if applicable) or in laboratory-generated acceptance criteria (if there are no established mandatory criteria). If all parameters meet the acceptance criteria, the analysis of actual samples may begin. If any one of the parameters do not meet the acceptance criteria, the performance is unacceptable for that parameter.

f) When one or more of the tested parameters fail at least one of the acceptance criteria, the analyst must proceed according to 1) or 2) below.

1) Locate and correct the source of the problem and repeat the test for all parameters of interest beginning with c) above.

2) Beginning with c) above, repeat the test for all parameters that failed to meet criteria. Repeated failure, however, will confirm a general problem with the measurement system. If this occurs, locate and correct the source of the problem and repeat the test for all compounds of interest beginning with c).

C.2 CERTIFICATION STATEMENT

The following certification statement shall be used to document the completion of each demonstration of capability. A copy of the certification statement shall be retained in the personnel records of each affected employee (see 6.3 and 12.3.4.b.).

Demonstration of Capability
Certification Statement

Date: Page __of __
Laboratory Name:
Laboratory Address:
Analyst(s) Name(s):

Matrix: _____
(examples: laboratory pure water, soil, air, solid, biological tissue)

Method number, SOP#, Rev #, and Analyte, or Class of Analytes or Measured Parameters:
_____ (examples: barium by 200.7, trace metals by 6010, benzene by 8021, etc.)

We, the undersigned, CERTIFY that:

1. The analysts identified above, using the cited test method(s), which is in use at this facility for the analyses of samples under the National Environmental Laboratory Accreditation Program, have met the Demonstration of Capability.

2. The test method(s) was performed by the analyst(s) identified on this certification.

3. A copy of the test method(s) and the laboratory-specific SOPs are available for all personnel on-site.

4. The data associated with the demonstration capability are true, accurate, complete and self-explanatory (1).

5. All raw data (including a copy of this certification form) necessary to reconstruct and validate these analyses have been retained at the facility, and that the associated information is well organized and available for review by authorized assessors.

Technical Director's Name and Title	Signature	Date
Quality Assurance Officer's Name	Signature	Date

This certification form must be completed each time a demonstration of capability study is completed.

(1) True: Consistent with supporting data.
Accurate: Based on good laboratory practices consistent with sound scientific principles/practices.
Complete: Includes the results of all supporting performance testing.
Self-explanatory: Data properly labeled and stored so that the results are clear and require no additional explanation.

APPENDIX D - ESSENTIAL QUALITY CONTROL REQUIREMENTS

The quality control protocols specified by the laboratory's method manual (10.1.2) shall be followed. The laboratory shall ensure that the essential standards outlined in Appendix D are incorporated into their method manuals.

All quality control measures shall be assessed and evaluated on an ongoing basis and quality control acceptance criteria shall be used to determine the validity of the data. The laboratory shall have procedures for the development of acceptance/rejection criteria where no method or regulatory criteria exists.

The requirements from the body of Chapter 5, e.g., Section 5.4, apply to all types of testing. The specific manner in which they are implemented is detailed in each of the sections of this Appendix, i.e., chemical testing.

D.1 CHEMICAL TESTING

D.1.1 Positive and Negative Controls

a) Negative Controls

1) Method Blanks - Shall be performed at a frequency of one per preparation batch of samples per matrix type. The results of this analysis shall be one of the QC measures to be used to assess the batch. The source of contamination must be investigated and measures taken to correct, minimize or eliminate the problem if

   i) the blank contamination exceeds a concentration greater than 1/10 of the measured concentration of any sample in the associated sample batch or

   ii) the blank contamination exceeds the concentration present in the samples and is greater than 1/10 of the specified regulatory limit.

Any sample associated with the contaminated blank shall be reprocessed for analysis or the results reported with appropriate data qualifying codes.

b) Positive Controls

1) Laboratory Control Sample (LCS) - (QC Check Samples) Shall be analyzed at a minimum of 1 per preparation batch of 20 or less samples per matrix type, except for analytes for which spiking solutions are not available such as total suspended solids, total dissolved solids, total volatile solids, total solids, pH, color, odor, temperature, dissolved oxygen or turbidity. The results of these samples shall be used to assess the batch. NOTE: The matrix spike (see 2 below) may be used in place of this control as long as the acceptance criteria are as stringent as for the LCS.

2) Matrix Spikes (MS) - Shall be performed at a frequency of one out of every 20 samples per matrix type prepared over time, except for analytes for which spiking solutions are not available such as, total suspended solids, total dissolved solids, total volatile solids, total solids, pH, color, odor, temperature, dissolved oxygen or turbidity. The selected sample(s) shall be rotated among client samples so that various matrix problems may be noted and/or addressed. Poor performance in a matrix spike may indicate a problem with the sample composition and shall be reported to the client whose sample was used for the spike.

3) Surrogates - Surrogate compounds must be added to all samples, standards, and blanks, for all organic chromatography methods except when the matrix precludes its use or when a surrogate

is not available. Poor surrogate recovery may indicate a problem with the sample composition and shall be reported to the client whose sample produced the poor recovery.

4) If the mandated or requested test method does not specify the spiking components, the laboratory shall spike all reportable components to be reported in the Laboratory Control Sample and Matrix Spike. However, in cases where the components interfere with accurate assessment (such as simultaneously spiking chlordane, toxaphene, and PCBs in Method 608), the test method has an extremely long list of components or components that are incompatible, a representative number (minimum of 10%) of the listed components may be used to control the test method. The selected components of each spiking mix shall represent all chemistries, elution patterns and masses, permit-specified analytes, and other client-requested components. However, the laboratory shall ensure that all reported components are used in the spike mixture within a two-year time period.

D.1.2 Analytical Variability/Reproducibility

Matrix Spike Duplicates (MSDs) or Laboratory Duplicates - Shall be analyzed at a minimum of 1 in 20 samples per matrix type per sample extraction or preparation method. The laboratory shall document its procedure to select the use of appropriate type of duplicate. The selected sample(s) shall be rotated among client samples so that various matrix problems may be noted and/or addressed. Poor performance in the duplicates may indicate a problem with the sample composition and shall be reported to the client whose sample was used for the duplicate.

D.1.3 Method Evaluation

In order to ensure the accuracy of the reported result, the following procedures shall be in place:

a) Demonstration of Analytical Capability - (Section 10.2.1) shall be performed initially (prior to the analysis of any samples) and with a significant change in instrument type, personnel, matrix or test method.

b) Calibration - Calibration protocols specified in Section 9.4 shall be followed.

c) Proficiency Test Samples - The results of such analyses (4.2.j or 5.3.4) shall be used by the laboratory to evaluate the ability of the laboratory to produce accurate data.

D.1.4 Detection Limits

The laboratory shall utilize a test method that provides a detection limit that is appropriate and relevant for the intended use of the data. Detection limits shall be determined by the protocol in the mandated test method or applicable regulation, e.g., Method Detection Limit (MDL). If the protocol for determining detection limits is not specified, the selection of the procedure must reflect instrument limitations and the intended application of the test method.

a) A detection limit study is not required for any component for which spiking solutions or quality control samples are not available such as temperature.

b) The detection limit shall be initially determined for the compounds of interest in each test method in a matrix in which there are not target analytes nor interferences at a concentration that would impact the results or the detection limit must be determined in the matrix of interest (see definition of matrix).

c) Detection limits must be determined each time there is a change in the test method that affects how the test is performed, or when a change in instrumentation occurs that affects the sensitivity of the analysis.

d) All samples processing steps of the analytical method shall be included in the determination of the detection limit.

e) All procedures used must be documented. Documentation must include the matrix type. All supporting data must be retained.

f) The laboratory must have established procedures to relate detection limits with quantitation limits.

g) The test method's quantitation limits must be established and must be above the detection limits.

D.1.5 Data Reduction

The procedures for data reduction, such as use of linear regression, shall be documented.

D.1.6 Quality of Standards and Reagents

a) The source of standards shall comply with 9.2.

b) Reagent Quality, Water Quality and Checks:

   1) Reagents - In methods where the purity of reagents is not specified, analytical reagent grade shall be used. Reagents of lesser purity than those specified by the test method shall not be used. The labels on the container should be checked to verify that the purity of the reagents meets the requirements of the particular test method. Such information shall be documented.

   2) Water - The quality of water sources shall be monitored and documented and shall meet method specified requirements.

   3) The laboratory will verify the concentration of titrants in accordance with written laboratory procedures.

D.1.7 Selectivity

a) Absolute retention time and relative retention time aid in the identification of components in chromatographic analyses and to evaluate the effectiveness of a column to separate constituents. The laboratory shall develop and document acceptance criteria for retention time windows.

b) A confirmation shall be performed to verify the compound identification when positive results are detected on a sample from a location that has not been previously tested by the laboratory. Such confirmations shall be performed on organic tests such as pesticides, herbicides, or acid extractable or when recommended by the analytical test method except when the analysis involves the use of a mass spectrometer. Confirmation is required unless stipulated in writing by the client. All confirmation shall be documented.

c) The laboratory shall document acceptance criteria for mass spectral tuning.

D.1.8 Constant and Consistent Test Conditions

a) The laboratory shall assure that the test instruments consistently operate within the specifications required of the application for which the equipment is used.

b) Glassware Cleaning - Glassware shall be cleaned to meet the sensitivity of the test method.

   Any cleaning and storage procedures that are not specified by the test method shall be documented in laboratory records and SOPs.

END OF DOCUMENT

ATTACHMENT C

Sample Identification Forms

ADVANCED GEOSERVICES CORP.
1055 Andrew Drive, Suite A
West Chester, Pennsylvania 19380
(610) 840-9100
FAX: (610) 840-9199

PROJECT NO. _____

SAMPLE IDENTIFICATION NUMBER	REMARKS:
COLLECTION INFORMATION DATE: TIME: BY:	☐ COMPOSITE ☐ GRAB
TESTING REQUIRED	PRESERVATIVES ADDED
RECEIVING LAB	LAB SAMPLE NO.

PHASE 2 RFI WORK PLAN
EXIDE TECHNOLOGIES
VERNON SMELTER

VERNON, CALIFORNIA

Scale:	SAMPLE LABEL
Originated By: J.M.S.	
Drawn By: S.M.F.	
Checked By: J.M.S.	Advanced GeoServices Corp. 1055 Andrew Drive, Suite A West Chester, Pennsylvania 19380 (610) 840-9100 FAX: (610) 840-9199
Project Mgr: P.G.S.	
Dwg No. 2005-1299-01-04	Project No. 2005-1299-01
Issued:	FIGURE: 2

J:\EXIDE\VERNON SMELTER\Drawings\2005-1299-01\2005-1299-01-04

1055 Andrew Drive, Suite A
West Chester, Pennsylvania 19380
PHONE: (610) 840-9100
FAX: (610) 840-9199

ADVANCED GEOSERVICES CORP.
CHAIN OF CUSTODY

page ____ of ____

Project Name: _____ Project No: _____

AGC Contact Person: _____ Shipment No: _____

Laboratory Name/Location: _____

Sampler's Name(s) (Print): _____

Sample ID/Location	Date Collected	Time Collected	Sample Type		Sample Matrix	Field Filtered		Total Number of Containers	Analysis Requested								Preservatives					Remarks
			Comp	Grab		Yes	No										H2SO4	HCL	HNO3	NAOH	NONE	

Turnaround time (circle one): Standard 5-7 Days (Rush) 2-4 Days (Rush) 24 Hours (Rush)

Deliverables (circle one): Results Only Results/QC Summary CLP-Like CLP NJ/CLP NJ/CLPII Other _____

Relinquished by:	Date/Time:	Received by:	Date/Time:
Relinquished by:	Date/Time:	Received by:	Date/Time:
Relinquished by:	Date/Time:	Received by:	Date/Time:
Relinquished by:	Date/Time:	Received by:	Date/Time:
Relinquished by:	Date/Time:	Received by:	Date/Time:

Sample Matrix: SW - Surface Water, GW - Groundwater, Sed - Sediment, S- Soil, Sld - Sludge

PHASE 2 RFI WORK PLAN
EXIDE TECHNOLOGIES
VERNON SMELTER
VERNON, CALIFORNIA

Scale:	CHAIN OF CUSTODY
Originated By: J.M.S.	
Drawn By: S.M.F.	
Checked By: J.M.S.	Advanced GeoServices Corp. 1055 Andrew Drive, Suite A West Chester, Pennsylvania 19380 (610) 840-9100 FAX: (610) 840-9199
Project Mgr: P.C.S.	
Dwg No. 2005-1299-01-05	
Issued:	Project No. 2005-1299-01 — FIGURE: 3

J:\EXIDE\VERNON SMELTER\Drawings\2005-1299-01\2005-1299-01-05

ATTACHMENT D

Geiger Counter Standard Operating Procedure

GEIGER COUNTER

STANDARD OPERATING PROCEDURE

ANALYSIS

Select soil samples (ex-situ analysis) and excavation bottom and sidewalls (in-situ analysis) will be screened with the Geiger Counter for residual gamma emitting radionuclides above background.

EQUIPMENT

Ludlum Model 19 Micro R Meter.

SAMPLE COLLECTION

Ex-situ samples will be collected in a sample core as discussed in the Sampling and Analysis Plan. The sample core will be laid on a flat surface. In-situ samples will be screened in-place.

EQUIPMENT START UP

Prepare the instrument and check batteries. Move the range multiplier switch to the 25 position and press the BAT button. The meter needle should deflect to the battery check portion on the meter scale. If the meter does not respond, check the batteries and replace if needed.

Turn the range selector switch to "5000" position. Expose the internal detectors to a check source. Verify the instrument indicates within 20% of the check source reading from last calibration. Switch the "AUD ON/OFF" switch to the "ON" position and confirm audible click.

Press the "LAMP" switch. Ensure meter face illuminates.

BACKGROUND READINGS

Background readings will be collected on different soil types encountered in the South Yard borings. Five boring locations will be selected randomly throughout the South Yard to determine background.

The sample core will be laid on a flat surface. Starting at the highest scale, proceed to lower scales until a reading is encountered. Set the instrument selector switch to the most sensitive range of the instrument. The reading is the meter reading multiplied by the scale multiple. Pass the Geiger counter over the full length of the sample at a rate of 1 inch per second for a total time period of 60 seconds, maintaining a consistent distance of 0.5 to 1 inch away from the sample. Record the readings every 15 seconds in the field book. Do not let the probe touch the sample or other materials.

Average the readings for each soil type to determine the background level. Background readings are typically 5 to 20 micro-R/h.

SAMPLE SCREENING

Starting at the highest scale, proceed to lower scales until a reading is encountered. Set the instrument selector switch to the most sensitive range of the instrument. The reading is the meter reading multiplied by the scale multiple. Pass the Geiger counter over the full length of the sample or over the in-situ area being analyzed at a rate of 1 inch per second, maintaining a consistent distance of 0.5 to 1 inch away from the sample. Record the readings in the field book. Do not let the probe touch the sample or other materials.

Compare each reading to the background level for the corresponding soil type. If readings exceed 11.4 micro-R/h, implement the procedures provided in the Work Plan.

LUDLUM MODEL 19
MICRO R METER

February 2012

Serial Number 207422 and Succeeding

Serial Numbers

LUDLUM MODEL 19
MICRO R METER

February 2012

Serial Number 207422 and Succeeding

Serial Numbers

LUDLUM MEASUREMENTS, INC
501 OAK STREET, P.O. BOX 810
SWEETWATER, TEXAS 79556
325-235-5494, FAX: 325-235-4672

REV #	ALTERATIONS	DATE	BY
1	VALID	3/16/04	DDW
2	UPDATED BATTERY LID	8/14/06	CMC
3	UPDATED METERFACE	2/15/12	CMC

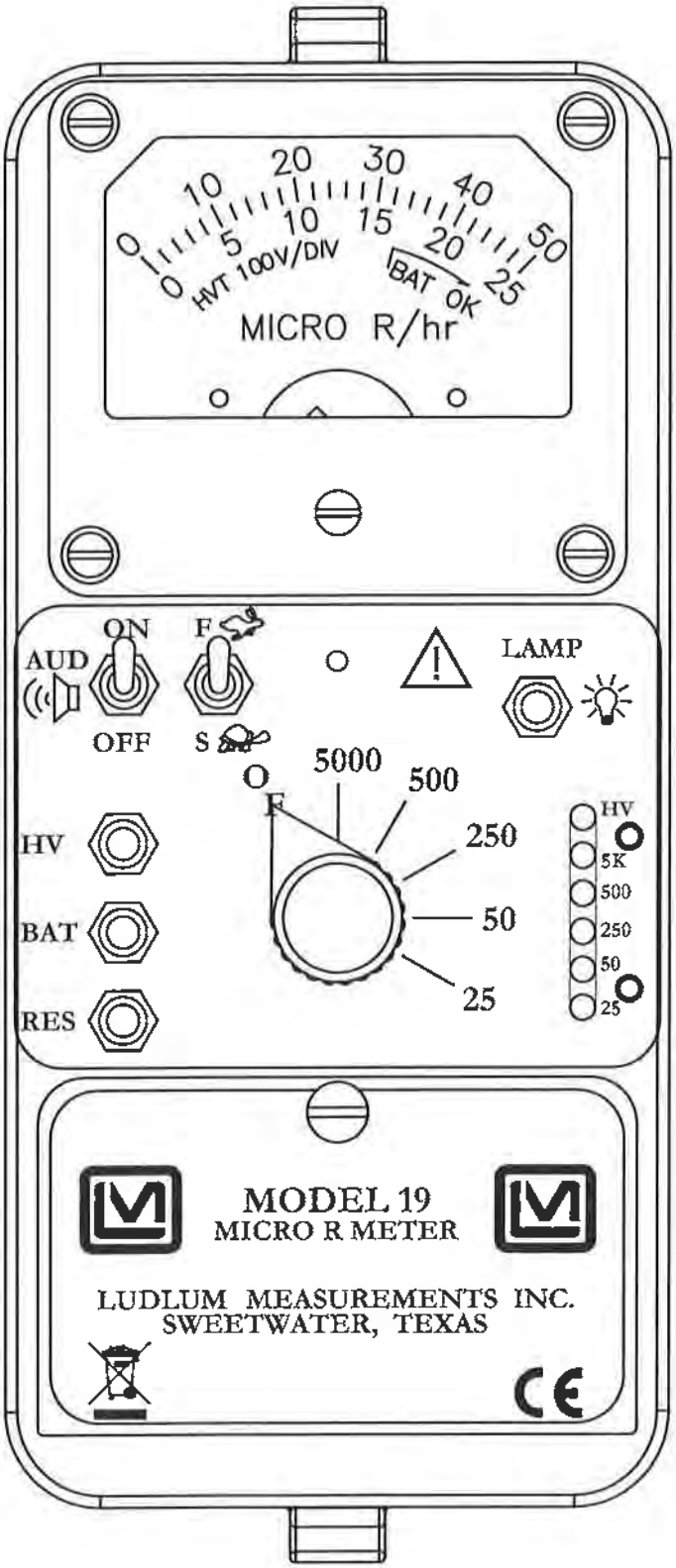

DWN	DATE	CHECKED	APPROVED
CMC	2/15/12		2-15-12

TITLE: MODEL 19 ASSY

LUDLUM MEASUREMENTS, INC
501 OAK STREET
SWEETWATER, TEXAS 79556

SERIES	SHEET
367	169

Table of Contents

Introduction 1

Getting Started 2

Unpacking and Repacking 2-1
Battery Installation 2-1
Operational Check 2-2
Maintenance 2-3
  Recalibration 2-3
  Batteries 2-3

Specifications 3

Identification of Controls and Functions 4

Safety Considerations 5

Environmental Conditions for Normal Use 5-1
Warning Markings and Symbols 5-1
Cleaning and Maintenance Precautions 5-2

Troubleshooting 6

Troubleshooting Electronics which utilize a Scintillation Detector 6-1

Technical Theory of Operation 7

Detector 7-1
Input 7-1
Amplifier 7-1
Discriminator 7-1
Audio 7-2
Scale Ranging 7-2
Digital Analog Converter 7-2
Meter Drive 7-2
Fast/Slow Time Constant 7-2
Low Voltage Supply 7-2
High Voltage Test 7-2
High Voltage Supply 7-3

Recycling *8*

Parts List *9*

Model 19 Micro R Meter 9-1

Main Board, Drawing 367 × 166 9-1

Wiring Diagram, Drawing 367 × 174 9-4

Drawings and Diagrams *10*

Section

1

Introduction

The Ludlum Model 19 Micro R Meter utilizes an internally-mounted 2.5 x 2.5 cm (1 × 1 in.) NaI(T1) scintillator for optimum performance in locating and measuring low-level (near background) gamma radiation.

The unit features a push-button, lighted meter and was designed to be moisture and dust resistant. The meter is housed in a rugged aluminum bezel with waterproof seals. All controls, including a calibration potentiometer for each range, are located on the front panel. Front-panel switches are rubber-booted to seal out moisture and dust. A high-voltage (HV) test control is provided to allow rapid plateau testing of the detector.

Five range divisions are provided in the 0-5000 micro R/hr spectrum. The meter face is made up of two scales, 0-50 and 0-25, plus battery test. The 0-50 scale corresponds to the 50, 500 and 5000 positions on the range selector switch. The 0-25 scale corresponds to the 25 and 250 positions on the range selector switch.

The instrument is capable of using either standard "D" cell flashlight batteries or nickel-cadmium rechargeable batteries. However, the Model 19 does not include circuitry for recharging the batteries. The two "D" cell batteries are located in an isolated compartment, easily accessible from the front panel.

The Model 19 NaI scintillator is energy sensitive. An energy response curve is included in section 10 of this manual for further reference.

Section

2

Getting Started

Unpacking and Repacking

Remove the calibration certificate and place it in a secure location. Remove the instrument and accessories (batteries, cable, etc.) and ensure that all of the items listed on the packing list are in the carton. Check individual item serial numbers and ensure calibration certificates match. The Model 19 serial number is located on the front panel below the battery compartment. Most Ludlum Measurements, Inc. detectors have a label on the base or body of the detector for model and serial number identification.

Important!

If multiple shipments are received, ensure that the detectors and instruments are not interchanged. Each instrument is calibrated to specific detectors, and therefore, not interchangeable.

To return an instrument for repair or calibration, provide sufficient packing material to prevent damage during shipment. Also provide appropriate warning labels to ensure careful handling. Include detector(s) and related cable(s) for calibration. Include brief information as to the reason for return, as well as return shipping instructions:

- **Return shipping address**
- **Customer name or contact**
- **Telephone number**
- **Description of service requested and all other necessary information**

Battery Installation

Ensure the Model 19 power switch is in the "OFF" position. Open the battery lid by pushing down and turning the quarter-turn thumbscrew counterclockwise a quarter of a turn. Install two "D" size batteries in the compartment.

Note the (+) and (-) marks inside the battery door. Match the battery polarity to these marks. Close the battery box lid, push down and turn the quarter-turn thumb screw clockwise a quarter of a turn.

Note:

Center post of a flashlight battery is positive. The batteries are placed in the battery compartment in opposite directions.

Operational Check

Turn the range selector switch to the "25" position. Depress the "BAT" pushbutton switch and ensure that the meter needle falls within the "BAT OK" marks. Check for a proper background reading. A typical reading would be: 5-15 uR/hr

Turn the range selector switch to the "5000" position. Expose the instrument to a check source and verify that the instrument indicates within 20% of the check source reading obtained during the last calibration.

Switch the "AUD ON/OFF" switch to the "ON" position and confirm that the external unimorph speaker produces an audible click for each event detected. The "AUD ON/OFF" switch will silence the audible clicks if in the "OFF" position. It is recommended that the "AUD ON/OFF" switch be kept in the "OFF" position when not needed in order to preserve battery life.

Turn the range selector switch to the "250" position and increase the source activity for a meter reading of 10-100 uR/hr. While observing the meter fluctuations, select between the fast and slow response time (F/S) positions to observe variations in the display. The "S" position should respond approximately five times slower than the "F" position.

Note:

The slow response position is normally used when the instrument is displaying low numbers, which require a more stable meter movement. The fast response position is used at high rate levels.

Check the meter reset function by depressing RESET and ensuring the meter needle drops to "0."

Depress the "LAMP" pushbutton switch. Ensure that the meter face illuminates when the switch is depressed. Proceed to use the instrument.

Maintenance

Instrument maintenance consists of keeping the instrument clean and periodically checking the batteries and the calibration. The Model 19 instrument may be cleaned with a damp cloth (using only water as the wetting agent). Do not immerse instrument in any liquid. Observe the following precautions when cleaning:

1. Turn the instrument off and remove the batteries.
2. Allow the instrument to sit for one minute before accessing internal components.

Recalibration

Recalibration should be accomplished after any maintenance or adjustment of any kind has been performed on the instrument. Battery replacements are not considered maintenance and do not normally require instrument recalibration.

Note:

Ludlum Measurements, Inc. recommends recalibration at intervals no greater than one year. Check the appropriate regulations to determine required recalibration intervals.

Ludlum Measurements offers a full-service repair and calibration department. We not only repair and calibrate our own instruments but most other manufacturers' instruments. Calibration procedures are available upon request for customers who choose to calibrate their own instruments.

Batteries

The batteries should be removed any time the instrument is placed into storage. Battery leakage may cause corrosion on the battery contacts, which must be scraped off and/or washed using a paste solution made from baking soda and water. Use a spanner wrench to unscrew the battery contact

insulators, exposing the internal contacts and battery springs. Removal of the handle will facilitate access to these contacts.

Note:

Never store the instrument over 30 days without removing the batteries. Although this instrument will operate at very high ambient temperatures, battery seal failure may occur at temperatures as low as 37 °C (100 °F).

Section

3

Specifications

Linearity: reading within 10% of true value

High Voltage: variable from 400 to 1500 Vdc; electronically regulated to within 1%

Battery Dependence: instrument calibration change less than 3% within the meter battery check limits

Power: two standard alkaline "D" cell batteries, secured in an isolated compartment

Battery Life: expected lifetime of approximately 2000 hours with the "AUD ON/OFF" switch in the OFF position

Audio Output: built-in unimorph speaker and "ON/OFF" switch provided on the front panel

Counting Ranges: two-scale meter face presenting 0-50 µR/hr with full scale range positions of 5000, 500 and 50; and 0-25 µR/hr with full scale range positions of 250 and 25.

Meter: 1 mA, 6.4 cm (2.5 in.) scale, pivot-and-jewel suspension

Detector: photomultiplier coupled to a 2.5 x 2.5 (1 × 1 in.) NaI(Tl) crystal, mounted inside the instrument housing

Construction: cast-and-drawn aluminum with beige powder-coat finish and printed membrane front panel

Size: 15.2 x 8.9 x 21.6 cm (6.0 x 3.5 x 8.5 in.), not including instrument handle

Weight: 2.04 kg (4.5 lb), including batteries

Section

4

Identification of Controls and Functions

Range Selector Switch: a six-position switch marked OFF, 5000, 500, 250, 50, and 25. Moving the range selector switch to one of the range positions (5000, 500, 250, 50, 25) provides the operator with an overall range of 0-5000 μR/hr. Note that the range positions 5000, 500 and 50 are screened in black and correspond to the meter scale screened in black. The range positions 250 and 25 are screened in red and correspond to the meter scale screened in red.

AUD ON-OFF Toggle Switch: In the ON position, the switch operates the unimorph speaker, located on the left side of the instrument. The frequency of the clicks is relative to the rate of the incoming pulses. The higher the rate is, the higher the audio frequency. The audio should be turned OFF when not required in order to reduce battery drain.

F-S Toggle Switch: provides meter response. Selecting the fast, "F," position of the toggle switch provides 90% of full-scale meter deflection in four seconds. In the slow, "S," position, 90% of full-scale meter deflection takes 22 seconds. In "F" position, there is fast response and large meter deviation. The "S" position should be used for slow response and damped, meter deviation.

BAT Pushbutton Switch: when depressed, this switch indicates the battery charge status on the meter. The range selector switch must be out of the OFF position.

RES Pushbutton Switch: When depressed, this switch provides a rapid means to drive the meter to zero.

LAMP Pushbutton Switch: When depressed, this switch lights the meter face.

HV Pushbutton Switch: When depressed, the meter reads the detector high voltage. Each meter division is equivalent to 100 V.

HV Adjustment: provides a means to vary the high voltage from 400 to 1500 V.

Range Calibration Adjustments: recessed potentiometers located under the calibration cover on the right side of the front panel. These adjustment controls allow individual calibration for each range multiplier.

Section

5

Safety Considerations

Environmental Conditions for Normal Use

Indoor or outdoor use

No maximum altitude

Temperature range of -20 to 50 °C (-4 to 122 °F)

Maximum relative humidity of less than 95% (non-condensing)

Pollution Degree 3 (as defined by IEC 664) (Occurs when conductive pollution or dry nonconductive pollution becomes conductive due to condensation. This is typical of industrial or construction sites.)

Warning Markings and Symbols

Caution!

The operator or responsible body is cautioned that the protection provided by the equipment may be impaired if the equipment is used in a manner not specified by Ludlum Measurements, Inc.

The Model 19 Micro R Meter is marked with the following symbols:

CAUTION (per ISO 3864, No. B.3.1) – designates hazardous live voltage and risk of electric shock. During normal use, internal components are hazardous live. This instrument must be isolated or disconnected from the hazardous live voltage before accessing the internal components. This symbol appears on the front panel. **Note the following precautions:**

Warning!

The operator is strongly cautioned to take the following precautions to avoid contact with internal hazardous live parts that are accessible using a tool:

1. Turn the instrument power OFF and remove the batteries.
2. Allow the instrument to sit for one minute before accessing internal components.

The "**crossed-out wheelie bin**" symbol notifies the consumer that the product is not to be mixed with unsorted municipal waste when discarding; each material must be separated. The symbol is placed on the battery compartment lid. See section 8, "Recycling," for further information.

The "CE" mark is used to identify this instrument as being acceptable for use within the European Union.

Cleaning and Maintenance Precautions

The Model 19 may be cleaned externally with a damp cloth, using only water as the wetting agent. Do not immerse the instrument in any liquid. Observe the following precautions when cleaning or performing maintenance on the instrument:

1. Turn the instrument OFF and remove the batteries.

2. Allow the instrument to sit for one minute before cleaning the exterior or accessing any internal components for maintenance.

Section

6

Troubleshooting

Occasionally, you may encounter problems with your LMI instrument or detector that may be repaired or resolved in the field, saving turn-around time and expense in returning the instrument to us for repair. Toward that end, LMI electronics technicians offer the following tips for troubleshooting the most common problems. Where several steps are given, perform them in order until the problem is corrected. Keep in mind that with this instrument, the most common problems encountered are: (1) sticky meters; and (2) battery contacts.

Note that the first troubleshooting tip is for determining whether the problem is with the electronics or with the detector. A Ludlum Model 500 Pulser is invaluable at this point, because of its ability to simultaneously check high voltage, input sensitivity or threshold, and the electronics for proper counting.

We hope these tips will prove to be helpful. As always, please call if you encounter difficulty in resolving a problem or if you have any questions.

Troubleshooting Electronics which utilize a Scintillation Detector

SYMPTOM	POSSIBLE SOLUTION
No power (or meter does not reach BAT TEST or BAT OK mark)	1. Check batteries and replace if weak. 2. Check polarity (see marks inside batter lid). Are the batteries installed backwards?

SYMPTOM	POSSIBLE SOLUTION
No power (or meter does not reach BAT TEST or BAT OK mark) (continued)	3. Check battery contacts. Clean them with rough sandpaper or use an engraver to clean the tips. 4. Check for loose or broken wires, especially between the main board and the calibration board.
Nonlinear Readings	1. Check the high voltage (HV) by pressing the HV TEST button. If a multimeter is used to check the HV, ensure that one with high impedance is used, as a standard multimeter could be damaged in this process. 2. Check for "sticky" meter movement. Does the reading change when you tap the meter? Does the meter needle "stick" at any spot? 3. Check the "meter zero." Turn the power OFF. The meter should come to rest on "0."
Meter goes full-scale or "pegs out"	1. Check the HV and, if possible, the input threshold for proper setting. 2. Check for loose wires, especially between the main board and the calibration board.

Section

7

Technical Theory of Operation

Detector

The detector consists of a crystal of sodium iodide with Thallium activation (NaI Tl) that gives off light pulses when penetrated by radiation photons.

The light pulses are converted to electrical pulses by the photo cathode of the photomultiplier tube. The photomultiplier includes a nine-stage electron amplifier. This amplifier utilizes an electrostatic field for each stage, adding up to a required 500 to 1500 V supply.

Input

Detector pulses are coupled from the detector through C6 to the amplifier. CR1 protects the amplifier from input shorts. R37 couples the detector to the high-voltage supply.

Amplifier

A self-biased amplifier provides gain in proportion to R15 and C4 divided by R14. Transistor (pin 3 of U4) provides amplification. U6 is configured as a current mirror to provide a load for pin 3 of U4. The output self biases to 2 Vbe (approximately 1.4 volts) at emitter of Q1. This provides just enough bias current through pin 3 of U4 to conduct all of the current from the current mirror.

Positive pulses at R16 are coupled to the discriminator through C5.

Discriminator

Comparator U8 provides discrimination. The discriminator is set by the voltage divider, R21 and R23, coupled to pin 3 of U8. U8 output pulses are coupled to pin 5 of U9A for meter drive and pin 12 of U9B for audio.

Audio

Discriminator pulses are coupled to univibrator pin 12 of U9B. Front-panel audio ON-OFF selector controls the reset at pin 13 of U9B. When ON, pulses from pin 10 of U9B turn on oscillator U12, which drives the can-mounted unimorph. Speaker tone is set by R31, C14; duration by R22, C7.

Scale Ranging

Detector pulses from the discriminator are coupled to univibrator pin 5 of U9A. For each scale, the pulse width of pin 6 of U9A is controlled by the front-panel calibration controls and their related capacitors. This arrangement allows the same current to be delivered to C9 in proportion to the meter reading.

Digital Analog Converter

U5 is configured as a current mirror. For each pulse of current through R24, an equal current is delivered to C9. This charge is drained off by R25. The voltage across C9 is proportional to the incoming count rate.

Meter Drive

The meter is driven by the collector of Q2 coupled as a voltage follower in conjunction with pin 1 of U10.

For the battery test, the voltage follower is bypassed and the meter movement is directly coupled to the battery through R8.

Fast/Slow Time Constant

For slow-time constant, C17 is switched from the output of the meter drive to parallel C9.

Low Voltage Supply

Battery voltage is coupled to U11 and associated components (a switching regulator) to provide 5 V at pin 8 to power all circuits.

High Voltage Test

A constant current is developed by collector of Q3 in proportion to HV signal at pin 1 of U17. U16 provides a current mirror to drive the meter

through analog switch logic circuit U15, U14, and U3.

High Voltage Supply

High voltage is developed by switching regulator U13 and T1. Voltage multiplier CR3 thru CR7, and associated components, develop the detector voltage. Voltage feedback is provided by R39 thru U17 to feed back pin 8 of U13 for voltage regulation. Pin 1 of U17 is proportional to the high voltage, and its output is also utilized to measure the high voltage. High voltage is adjusted by varying the feedback current with R42.

Section

8

Recycling

Ludlum Measurements, Inc. supports the recycling of the electronics products it produces for the purpose of protecting the environment and to comply with all regional, national, and international agencies that promote economically and environmentally sustainable recycling systems. To this end, Ludlum Measurements, Inc. strives to supply the consumer of its goods with information regarding reuse and recycling of the many different types of materials used in its products. With many different agencies – public and private – involved in this pursuit, it becomes evident that a myriad of methods can be used in the process of recycling. Therefore, Ludlum Measurements, Inc. does not suggest one particular method over another, but simply desires to inform its consumers of the range of recyclable materials present in its products, so that the user will have flexibility in following all local and federal laws.

The following types of recyclable materials are present in Ludlum Measurements, Inc. electronics products, and should be recycled separately. The list is not all-inclusive, nor does it suggest that all materials are present in each piece of equipment:

Batteries	Glass	Aluminum and Stainless Steel
Circuit Boards	Plastics	Liquid Crystal Display (LCD)

Ludlum Measurements, Inc. products, which have been placed on the market after August 13, 2005, have been labeled with a symbol recognized internationally as the "crossed-out wheelie bin." This notifies the consumer that the product is not to be mixed with unsorted municipal waste when discarding; each material must be separated. The symbol will be placed near the AC receptacle, except for portable equipment where it will be placed on the battery lid.

The symbol appears as such:

Section

9

Parts List

	Reference	Description	Part Number
Model 19 Micro R Meter	UNIT	Completely Assembled Model 19 Micro R Meter	48-1615
Main Board, Drawing 367 × 166	BOARD	Completely Assembled Circuit Board	5367-166
CAPACITORS	C1	47pF, 100V	04-5660
	C2	0.0022µF, 50V	04-5676
	C3	0.001µF, 100V	04-5659
	C4	10pF, 100V	04-5673
	C5	0.01µF, 50V	04-5664
	C6	100pF, 3KV	04-5735
	C7	0.022µF, 50V	04-5667
	C8	1µF, 16V	04-5701
	C9	10µF, 25V	04-5655
	C10	100pF, 100V	04-5661
	C11	68µF, 10V	04-5654
	C12	10µF, 25V	04-5728
	C14	470pF, 100V	04-5668
	C17	47µF, 10V	04-5666
	C18-C27	0.01µF, 500V	04-5696
	C28	0.001µF, 2KV	04-5703
	C29	68µF, 10V	04-5654
	C30-C31	1µF, 16V	04-5701
	C32	270pF, 100V	04-5679
	C33	0.01µF, 50V	04-5664

	Reference	Description	Part Number
TRANSISTORS	Q1	MMBT3904LT1	05-5841
	Q2	MMBT4403LT1	05-5842
	Q3	MMBT3904LT1	05-5841
VOLTAGE REGULATOR	VR1	LT1460KCS3-2.5TR	05-5867
INTEGRATED CIRCUITS	U1-U3	MAX4542ESA	06-6453
	U4-U5	CMXT3904	05-5888
	U6	CMXT3906	05-5890
	U7	MAX4541ESA	06-6452
	U8	MAX985EUK-T	06-6459
	U9	CD74HC4538M	06-6297
	U10	LMC7111BIM5X	06-6410
	U11	LT1304CS8-5	06-6434
	U12	MIC1557BM5	06-6457
	U13	LT1304CS8	06-6394
	U14-U15	MAX4542ESA	06-6453
	U16	CMXT3906	05-5890
	U17-C18	LMC7111BIM5X	06-6410
DIODES			
	CR1	CMPD2005S	07-6468
	CR2	CMSH1-40M	07-6411
	CR3-CR7	CMPD2005S	07-6468
	CR9	CMSH1-40M	07-6411
SWITCHES			
	SW1	RANGE SELECTOR	08-6761
	SW2	H.V. PUSHBUTTON	08-6770
	SW3	F-S TOGGLE	08-6781
	SW4	AUD ON-OFF TOGGLE	08-6781
	SW5	RES PUSHBUTTON	08-6770
	SW6	LAMP PUSHBUTTON	08-6770
	SW7	BAT PUSHBUTTON	08-6770
POTENTIOMETERS / TRIMMERS			
	R33	1M, 64W105 NAME	09-6814
	R34	1M, 64W105 X10	09-6814
	R35	1M, 64W105 X1	09-6814
	R36	1M, 64W105 X0.1	09-6814
	R41	100K, 64W104 X100	09-6813

	Reference	Description	Part Number
	R42	100K, 64W104 HV ADJ	09-6813
	R52	10K, 3266X1-103 NAME	09-6822
RESISTORS			
	R1-R5	200K, 1/8W, 1%	12-7992
	R6	8.25K, 1/8W, 1%	12-7838
	R7	10K, 1/8W, 1%	12-7839
	R8	2.37K, 1/8W, 1%	12-7861
	R9-R11	10K, 1/8W, 1%	12-7839
	R12	200 Ohm, 1/8W, 1%	12-7846
	R13	10K, 1/8W, 1%	12-7839
	R14	4.75K, 1/8W, 1%	12-7858
	R15	200K, 1/8W, 1%	12-7992
	R16	10K, 1/8W, 1%	12-7839
	R17	1K, 1/8W, 1%	12-7832
	R18	4.75K, 1/8W, 1%	12-7858
	R19	2K, 1/8W, 1%	12-7926
	R20-R21	100K, 1/4W, 1%	12-7834
	R22	1M, 1/8W, 1%	12-7844
	R23	2.49K, 1/8W, 1%	12-7999
	R24	14.7K, 1/8W, 1%	12-7068
	R25	200K, 1/4W, 1%	12-7992
	R26	100K, 1/4W, 1%	12-7834
	R27	68.1K, 1/8W, 1%	12-7881
	R28	100K, 1/8W, 1%	12-7834
	R29	1K, 1/8W, 1%	12-7832
	R30	100K, 1/8W, 1%	12-7834
	R31	475K, 1/8W, 1%	12-7859
	R32	100K, 1/8W, 1%	12-7834
	R37	100K, 1/8W, 1%	12-7834
	R38	4.75M, 1/8W, 1%	12-7995
	R39	500M, 3KV, 2%	12-7031
	R40	1M, 1/4W, 1%	12-7844
	R44	1K, 1/4W, 1%	12-7832
	R45	8.25K, 1/8W, 1%	12-7838
	R46-R48	200K, 1/4W, 1%	12-7992
	R49	825K, 1/8W, 1%	12-7005
	R50	953K, 1/8W, 1%	12-7950
	R53	1K, 1/4W, 1%	12-7832
CONNECTORS			
	P1	CONN-640456-4	
		MTA100x4 NAME	13-8088

	Reference	Description	Part Number
	P2	CONN-640456-3 MTA100x3 NAME	13-8081
	P3	CONN-640456-2 MTA100x2 NAME	13-8073
	P4	CONTACT #1434 NAME	18-9124
INDUCTOR			
	L1	22µH, CD43-220	21-9808
TRANSFORMER			
	T1	31032R	21-9925
Wiring Diagram, Drawing 367 × 174			
	DS1	Model 19 LAMP BOARD 5367-113	5367-113
AUDIO			
	DS2	UNIMORPH TEC-3526-PU	21-9251
CONNECTOR			
	P1	MTA100x4 MAIN BOARD 5367-166	13-8170
	P2	MTA 100x3 MAIN BOARD 5367-166	13-8135
	P3	MTA 100x2 MAIN BOARD 5367-166	13-8178
BATTERY	B1-B2	DURACELL "D"	21-9313
MISCELLANEOUS			
	*	MODEL 19 INTERNAL DETECTOR	47-3426
	*	TUBE/XTAL ASSY	2004-061
	M1	MODEL 19 METER ASSY 987010-001 1mA	4367-024
	*	MODEL 19 METERFACE (202-016)	7367-023
	*	METER BEZEL W/ GLASS W/ SCREWS	4363-352-00
	*	METER MOVEMENT (1mA)	15-8030
	*	Model 19 BATTERY BOX LID W/CNTCT	2363-191
	*	DEEP PORTABLE CAN ASSY	4363-615
	*	MODEL 19 CASTING	7367-171
	*	MODEL 19 MAIN HARNESS	8367-170

Reference	Description	Part Number
*	PORTABLE KNOB	08-6613
*	SWITCH SEAL (P/B)	08-6611
*	UNIMORPH W/WIRES, O'RING	40-0034
*	CAL COVER W/SCREWS	4363-200
*	HANDLE- PORTABLE (GRIP)	7363-139

Section

10

Drawings

Model Board Circuit, Drawing 367 × 166 (4 sheets)

Model Board Component Layouts, Drawings 367 × 167 (2 sheets)

Wiring Diagram, Drawing 367 × 174

Energy Response for Ludlum Model 19

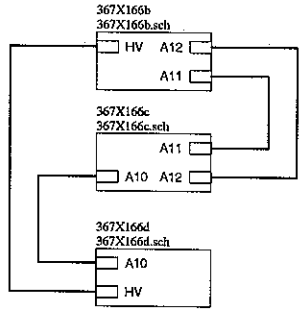

LUDLUM MEASUREMENTS, INC.
PO Box 810
501 Oak Street
Sweetwater, Texas 79556
U.S.A. 1-800-622-0828

Drawn: JK	04-MAR-04	Title: MAIN BOARD	
Design: DL	04-MAR-04	Model: M19	
Check:		Board#: 5367-166	
Approve:	31 Mar 04	Sheet: 1 of 4	Series 367 / Sheet 166
11:08:49	31-Mar-2004	Rev: 4.0	

367x166a.sch

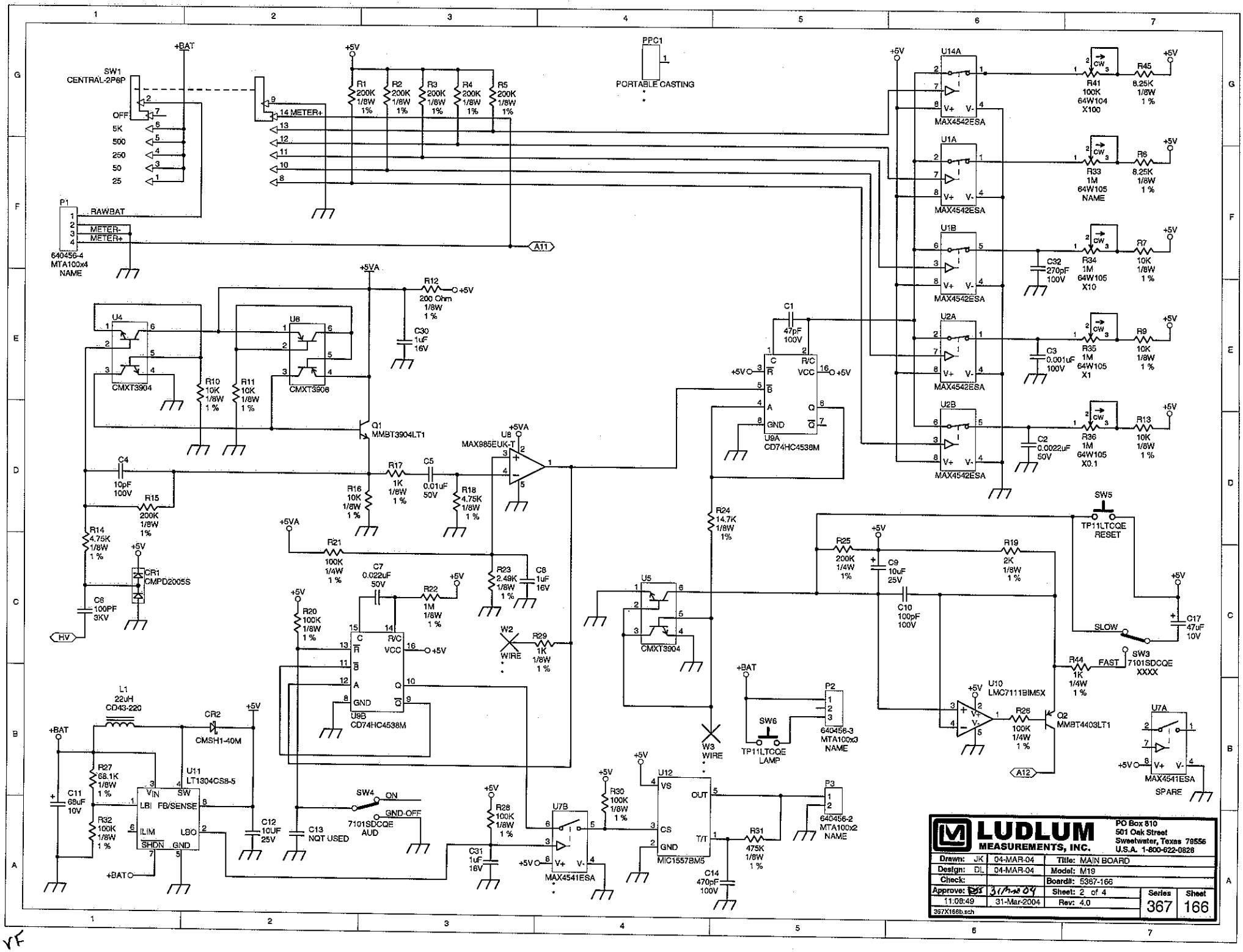
SW1
CENTRAL-2P6P
OFF
5K
500
250
50
25
+BAT
+5V
14 METER+
R1 200K 1/8W 1%
R2 200K 1/8W 1%
R3 200K 1/8W 1%
R4 200K 1/8W 1%
R5 200K 1/8W 1%
PPC1
PORTABLE CASTING
P1
RAWBAT
METER-
METER+
640456-4
MTA100x4
NAME
A11
U14A
U1A
U1B
U2A
U2B
MAX4542ESA
R41 100K 64W104 X100
R33 1M 64W105 NAME
R34 1M 64W105 X10
R35 1M 64W105 X1
R36 1M 64W105 X0.1
R45 8.25K 1/8W 1%
R6 8.25K 1/8W 1%
R7 10K 1/8W 1%
R9 10K 1/8W 1%
R13 10K 1/8W 1%
C32 270pF 100V
C3 0.001uF 100V
C2 0.0022uF 50V
+5VA
R12 200 Ohm 1/8W 1%
C30 1uF 16V
U4
U6
CMXT3904
CMXT3906
R10 10K 1/8W 1%
R11 10K 1/8W 1%
Q1 MMBT3904LT1
C1 47pF 100V
U9A
CD74HC4538M
U8
MAX985EUK-T
C4 10pF 100V
R15 200K 1/8W 1%
R14 4.75K 1/8W 1%
R16 10K 1/8W 1%
R17 1K 1/8W 1%
C5 0.01uF 50V
R18 4.75K 1/8W 1%
R24 14.7K 1/8W 1%
CR1 CMPD2005S
C6 100PF 3KV
HV
R21 100K 1/4W 1%
C7 0.022uF 50V
R22 1M 1/8W 1%
R23 2.49K 1/8W 1%
C8 1uF 16V
R20 100K 1/8W 1%
W2 WIRE
R29 1K 1/8W 1%
U9B
CD74HC4538M
U5
CMXT3904
W3 WIRE
R25 200K 1/4W 1%
C9 10uF 25V
R19 2K 1/8W 1%
C10 100pF 100V
SW5
TP11LTCQE
RESET
SLOW
SW3
7101SDCQE
XXXX
FAST
R44 1K 1/4W 1%
C17 47uF 10V
U10
LMC7111BIM5X
R26 100K 1/4W 1%
Q2 MMBT4403LT1
A12
U7A
MAX4541ESA
SPARE
L1 22uH CD43-220
CR2 CMSH1-40M
C11 68uF 10V
R27 68.1K 1/8W 1%
R32 100K 1/8W 1%
U11 LT1304CS8-5
VIN SW LBI FB/SENSE ILIM LBO SHDN GND
C12 10UF 25V
C13 NOT USED
SW4 ON GND-OFF
7101SDCQE
AUD
R28 100K 1/8W 1%
C31 1uF 16V
U7B
MAX4541ESA
R30 100K 1/8W 1%
U12
MIC1557BM5
VS CUT CS GND T/T
R31 475K 1/8W 1%
C14 470pF 100V
P2
640456-3
MTA100x3
NAME
SW6
TP11LTCQE
LAMP
P3
640456-2
MTA100x2
NAME
LUDLUM MEASUREMENTS, INC.
PO Box 810
501 Oak Street
Sweetwater, Texas 79556
U.S.A. 1-800-622-0828
Drawn: JK 04-MAR-04
Design: DL 04-MAR-04
Check:
Approve: 31-Mar-04
11:08:49 31-Mar-2004
367X166b.sch
Title: MAIN BOARD
Model: M19
Board#: 5367-166
Sheet: 2 of 4
Rev: 4.0
Series 367
Sheet 166

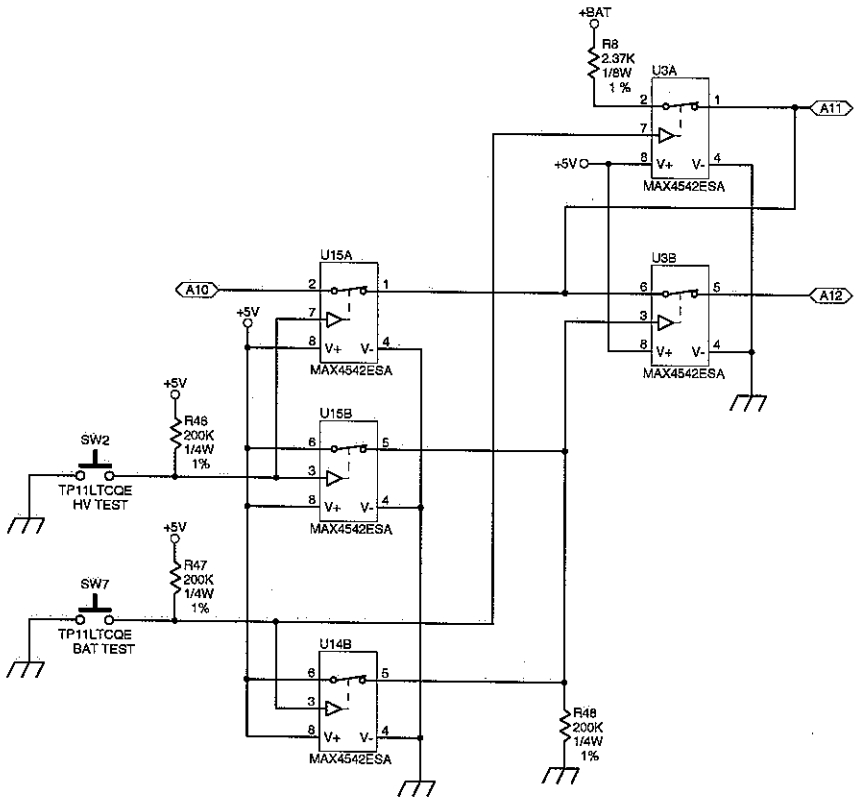

LUDLUM MEASUREMENTS, INC.		PO Box 810 501 Oak Street Sweetwater, Texas 79556 U.S.A. 1-800-622-0828	
Drawn: JK	04-MAR-04	Title: MAIN BOARD	
Design: DL	04-MAR-04	Model: M19	
Check:		Board#: 5367-166	
Approve:	31 Mar 04	Sheet: 3 of 4	Series 367 / Sheet 166
11:08:50	31-Mar-2004	Rev: 4.0	
367X166c.sch			

VF

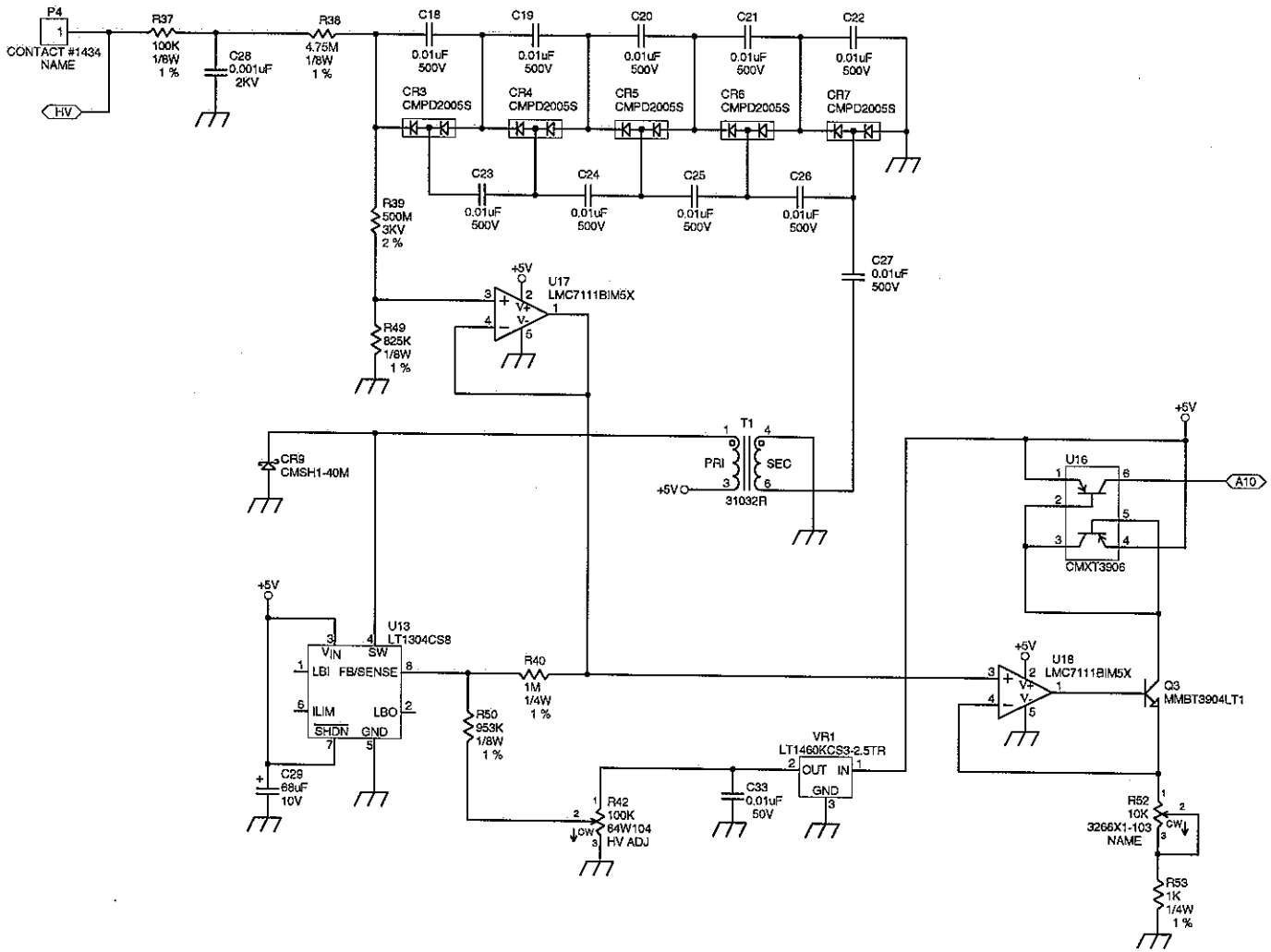

LUDLUM MEASUREMENTS, INC.			PO Box 810 501 Oak Street Sweetwater, Texas 79556 U.S.A. 1-800-622-0828		
Drawn: JK	04-MAR-04	Title: MAIN BOARD			
Design: DL	04-MAR-04	Model: M19			
Check:		Board#: 5367-166			
Approve:	31Mar04	Sheet: 4 of 4		Series	Sheet
11:08:51	31-Mar-2004	Rev: 4.0		367	166
367X166d.sch					

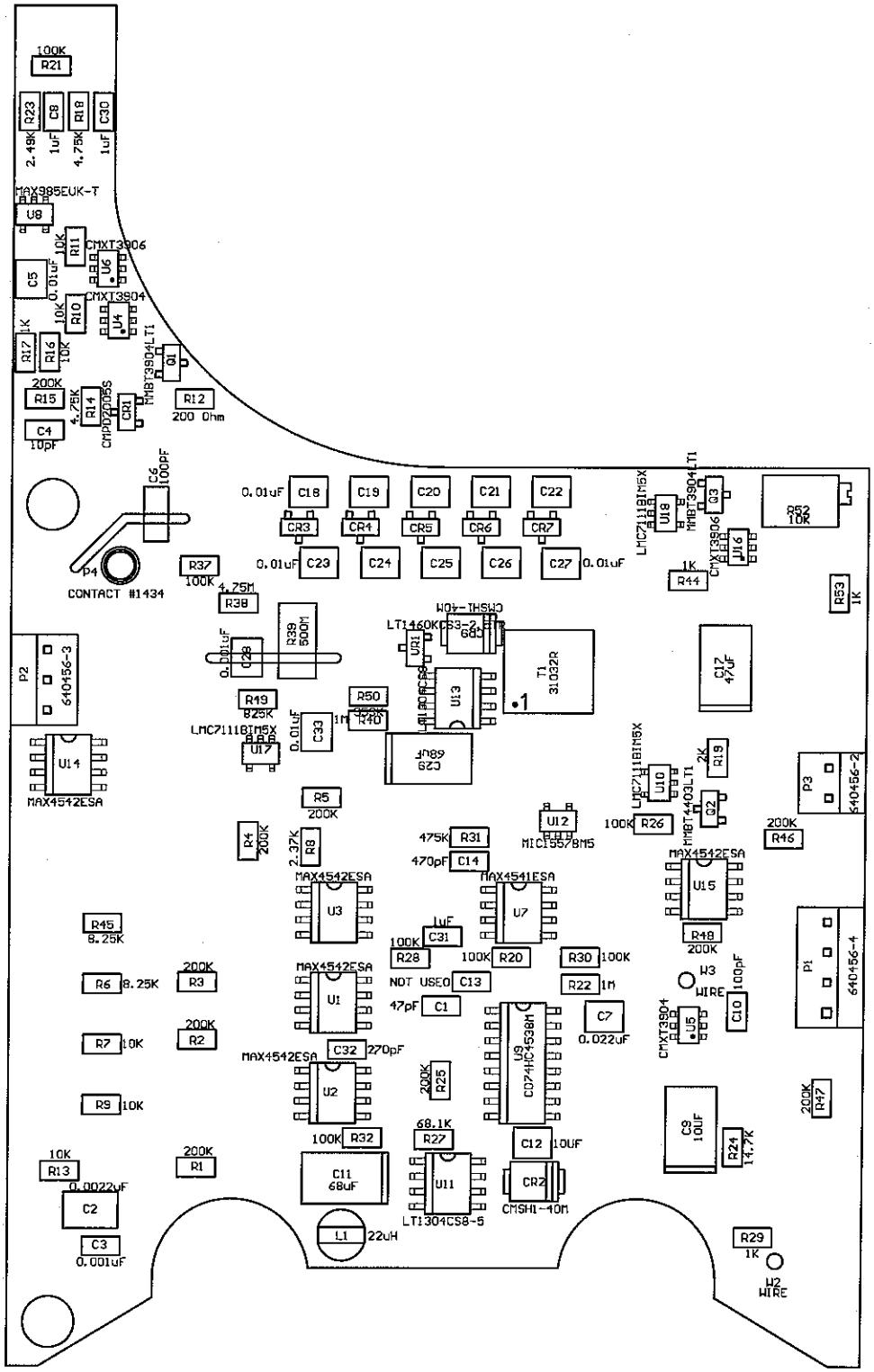

Drawn: JK	04-MAR-04	Title: MAIN BOARD			
Design: DL	04-MAR-04				
Check: DL	06-MAR-04	Model: M19			
Approve:		Board#: 5367-166			
Layer:		Rev: 4.0	Series	Sheet	
	14:46:39 6-Apr-2004	SCALE: 1.75	367	167	

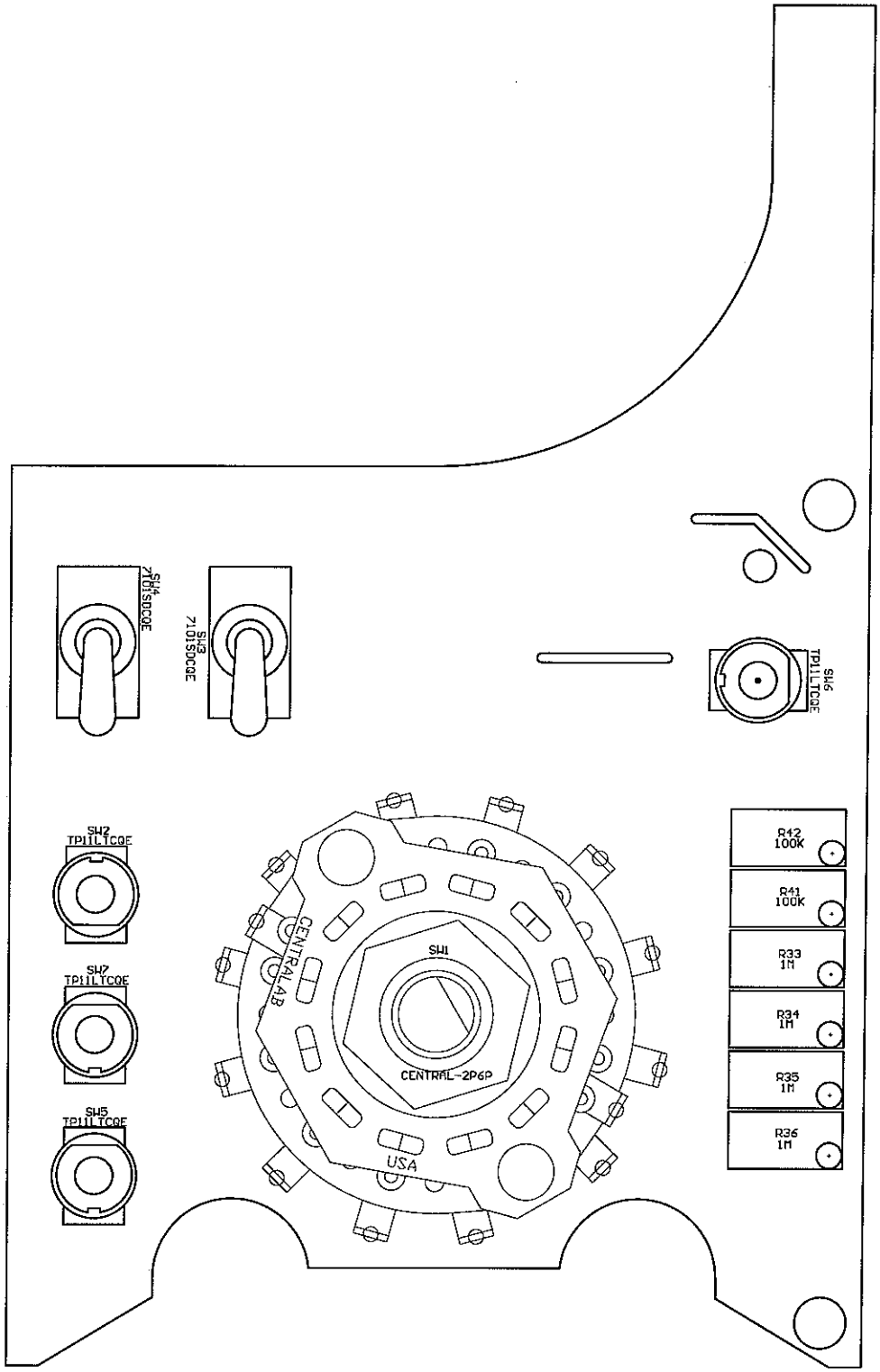

Drawn: JK	04–MAR–04	Title: MAIN BOARD			
Design: DL	04–MAR–04				
Check: DL	06-MAR-04	Model: M19			
Approve:		Board#: 5367–166			
Layer:		Rev: 4.0	Series	Sheet	
	14:46:40 6–Apr–2004	SCALE: 1.75	367	167	

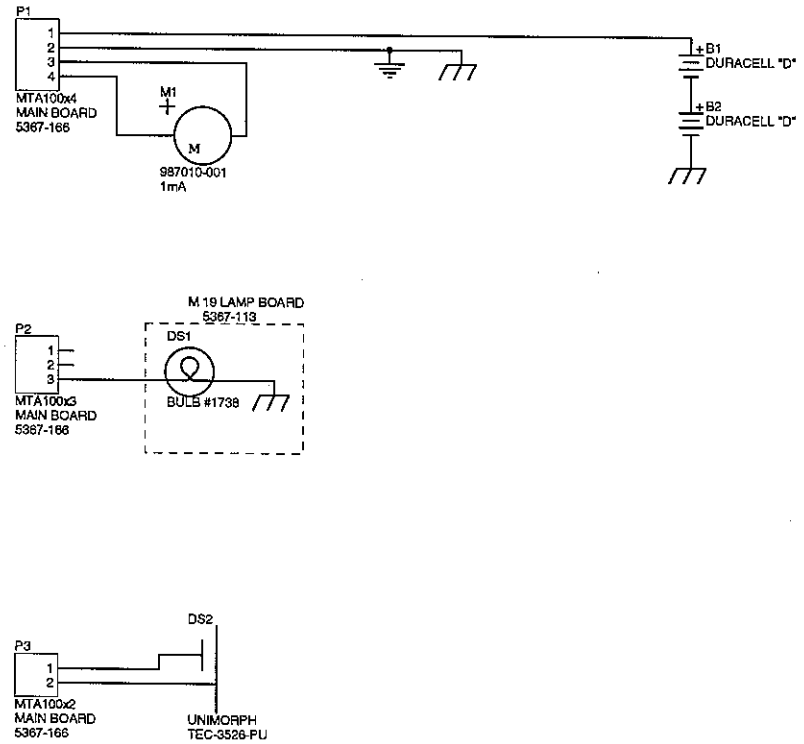

LUDLUM MEASUREMENTS, INC.

PO Box 810
501 Oak Street
Sweetwater, Texas 79556
U.S.A. 1-800-622-0828

Drawn: MEB	02-APR-04	Title: WIRING DIAGRAM	
Design: DL	02-APR-04	Model: 19	
		Board#: 367-174	
Approve: RJL	12 APR 04	Sheet: 1 of 1	Series 367 / Sheet 174
10:25:34	7-Apr-2004	Rev:	
367x174			

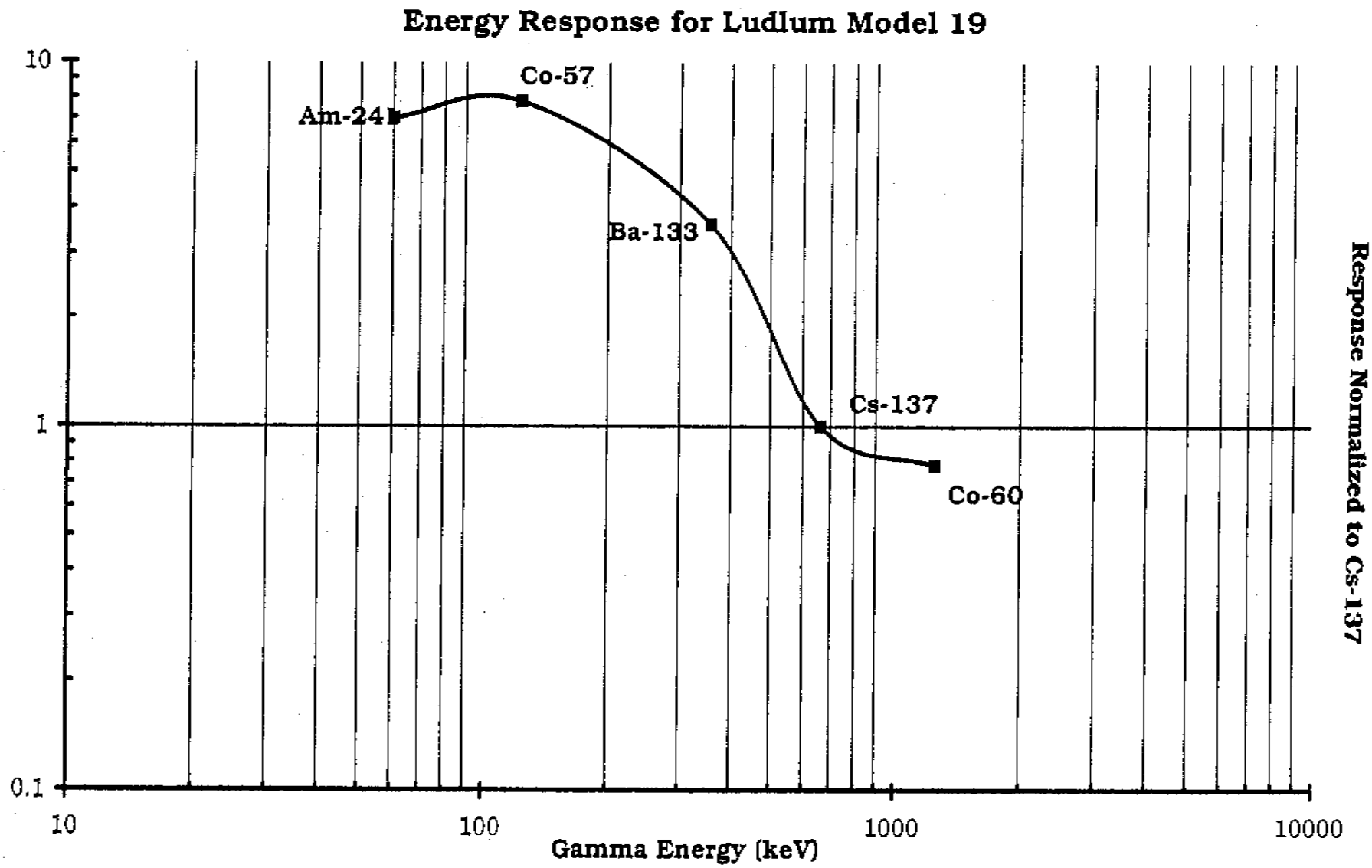
Energy Response for Ludlum Model 19
10
1
0.1
Am-241
Co-57
Ba-133
Cs-137
Co-60
10
100
1000
10000
Gamma Energy (keV)
Response Normalized to Cs-137

APPENDIX F

Geotextile Requirements

US 100NW

Nonwoven Geotextile

US 100NW is a nonwoven needlepunched geotextile made of 100% polypropylene staple filaments. US 100NW resists ultraviolet and biological deterioration, rotting, naturally encountered basics and acids. Polypropylene is stable within a pH range of 2 to 13. US 100NW meets the following M.A.R.V. values except where noted:

Confidential Settlement Communication
(Cal. Evid. Code §1152)

PROPERTY	TEST METHOD	ENGLISH	METRIC
Weight - Typical	ASTM D-5261	4.0 oz/sy	136 g/sm
Tensile Strength	ASTM D-4632	100 lbs	445 N
Elongation @ Break	ASTM D-4632	50%	50%
Mullen Burst*	ASTM D-3786*	210 psi	1,448 kPa
Puncture Strength*	ASTM D-4833*	65 lbs	289 N
CBR Puncture	ASTM D-6241	300 lbs	1,335 N
Trapezoidal Tear	ASTM D-4533	50 lbs	222 N
Apparent Opening Size	ASTM D-4751	70 US Sieve	0.212 mm
Permittivity	ASTM D-4491	2.00 Sec-1	2.00 Sec-1
Water Flow Rate	ASTM D-4491	140 g/min/sf	5,689 l/min/sm
UV Resistance @ 500 Hours	ASTM D-4355	70%	70%

ROLL SIZE	AREA	WEIGHT
12.5' x 360'	500 sys	146 lbs
15' x 360'	600 sys	172 lbs

* Historical averages (current values not available): Mullen Burst Strength ASTM D3786 is no longer recognized by ASTM D-35 on Geosynthetics as an acceptable test method. Puncture Strength ASTM D4833 is not recognized by AASHTO M288 and has been replaced with CBR Puncture ASTM D6241.

This information is provided for reference only and is not intended as a warranty or guarantee. US Fabrics assumes no liability in connection with the use of this information (1/2013).

US Fabrics, Inc. | 3904 Virginia Avenue | Cincinnati, OH 45227 (USA) | Phone: 800-518-2290 | Fax: (513) 271-4420

APPENDIX G

General Environmental, Health and Safety Rules and Regulations for Contractors and Subcontractors Working at Exide Technologies

VERNON, CA FACILITY

GENERAL ENVIRONMENTAL, HEALTH & SAFETY

RULES AND REGULATIONS FOR

CONTRACTORS AND SUBCONTRACTORS

WORKING AT

EXIDE TECHNOLOGIES

ORIGINAL DATE 11/30/2011

TABLE of CONTENTS

- Exide Environmental, Health & Safety Policy
- Vernon Evacuation Map
- Vernon PPE Map
- Introduction

GENERAL CONTRACTOR RESPONSIBILITIES

1.0 Compliance Agreement
2.0 Contractor Compliance Responsibilities
3.0 Site Security
4.0 Personal Protective Equipment
5.0 Alcoholic Beverages And Controlled Substances
6.0 Accidents And Injuries
7.0 Permits including safet work permtiing,etc.
8.0 Fire Protection And Prevention
9.0 Safety Training And Education
10.0 Safety Inspections
11.0 Housekeeping And Hygiene
12.0 Material Handling, Storage And Disposal
13.0 Elevated Work
14.0 Excavations, Trenching And Shoring
15.0 Concrete Forms And Shoring
16.0 Crane Work
17.0 Miscellaneous Provisions

EXIDE RESPONSIBILITIES

1.0 Assignment Of A Exide Representative
2.0 Pre-Work And Work In Progress Requirements
3.0 Hazard Communication
4.0 PRE-WORK MEETING
5.0 TRAINING, PPE and MONITORING
6.0 Aluminum Materials and Aerosol Cans

It is Exide Technologies goal to maintain the highest standards of Environmental, Health and Safety protection. We will always strive to:

- Operate in a manner that protects the health and safety of our neighbors in the communities where we operate.
- Operate in a manner that protects the safety and health of all employees, contractors, and visitors to Exide facilities.
- Protect the environment and properly respond to any adverse environmental impacts caused by Exide operations.
- Operate in compliance with applicable environmental, health and safety laws.
- Integrate sound environmental, health & safety practices into daily business operations.
- Improve product safety and reduce the environmental impact of our products and manufacturing processes.
- Examine and continually improve Exide's environmental, health & safety management systems.

Continue to develop the environmental, health and safety expertise of all Exide employees. We are committed to meeting customer expectations in an environmentally sensitive manner in everything we do and everywhere we do it.

INTRODUCTION

Environmental, Health & Safety rules and regulations stated herein are minimum health & safety and environmental requirements for contractors and subcontractors working at Exide.

Additional health & safety and environmental rules and regulations may be required according to the nature of work performed.

To be considered for work at Exide, a bidding contractor must submit with a bid a signed copy of this booklet for his or her company and every proposed subcontractor. Once a signed copy has been received by Exide, future bids are not required to have a signed copy attached.

This submission will become part of any contract agreement and will certify that all contractor and subcontractor personnel have been informed and will comply with these requirements.

The cost of abiding by these requirements, including all required PPE, must be included in the bid and any contract price. No claims for added compensation arising from compliance will be considered by Exide after a contract for the work is made effective.

GENERAL CONTRACTOR RESPONSIBILITIES

1.0 COMPLIANCE AGREEMENT

1.1 Prior to executing work for Exide, a contractor must agree to comply with the following:

1.1.1 All Federal, State and Local safety and environmental requirements and regulations which apply to the work to be performed;

1.1.2 All requirements detailed in this document; and,

1.1.3 All additional requirements submitted in the documentation package including: Standard Articles for Fixed Price Construction Contract or Weighted Hourly Time and Materials Contract, whichever is applicable, the Notice to Third-Party employers at a Multi-Employer Work site and any Additional Rules, Regulations or Requirements of the **Vernon, CA Site.**

2.0 CONTRACTOR COMPLIANCE RESPONSIBILITIES

2.1 Contractors are responsible for all training and supervision of personnel necessary to comply with safety requirements described in Sections 1 and 9 of these rules.

2.2 Contractors are responsible for ensuring that all subcontractor personnel are trained and supervised to comply with safety requirements described in Sections 1 and 9 of these rules.

2.3 Contractor obligations to comply with the safety and environmental requirements described in Section 1 of these rules may be modified, only if, in the opinion of the Exide plant manager or designee, the work is sufficiently separated from existing Exide facilities and personnel so as to pose no danger to personnel or property. Any modifications must provide an equivalent degree of safety to contractor/subcontractor personnel and comply with all regulatory requirements. These modifications must be agreed to before any work begins and be documented as part of the contract agreement.

2.4 Contractors will immediately notify the appropriate Exide representative in the event of a regulatory inspection.

2.5 Contractors will immediately correct any safety and/or environmental

discrepancies noted by Exide personnel. Failure to do so may result in work stoppage without additional compensation.

2.6 Contractors are responsible for providing all the equipment necessary to complete work specified by the contract. This requirement includes all safety equipment as well as equipment for completing the work.

3.0 SITE SECURITY

3.1 Contractor/subcontractor personnel will register daily at site entrance designated by Exide.

3.1.1. Sign-in of visitors is mandatory. Records are to be retained for a minimum of one year.

3.1.2. All visitors must sign out when leaving the premises.

3.2 Contractor/subcontractor personnel will park vehicle(s) in the space(s) assigned by Exide.

3.3 Firearms and ammunition are not allowed on Exide sites.

3.4 Cameras are permitted on site only with prior permission of the Exide Plant Manager and/or Assistant Plant Manager.

3.5 Contractors shall be responsible for securing their equipment and material and will not hold Exide liable for losses.

3.6 Contractors will not block exit doors or emergency equipment with their vehicles, trailers, etc.

4.0 PERSONAL PROTECTIVE EQUIPMENT

4.1 Contractor/subcontractor personnel are required to wear ANSI approved (Z87.1) industrial safety glasses with attached side shields at all times. If work will be outside, tinted glasses that meet the ANSI requirements will be permitted. It must be understood that upon entrance into any Exide production building or Maintenance Shop non-tinted glasses are required.

4.2 Clothing must consist of long sleeves and long pants are consistent with plant requirements for its employees.

4.3 Contractor/subcontractor personnel must wear substantial boots meeting the following requirements:

4.3.1 Meets or exceeds ANSI Z41-1991, MI/75, C/75 (maximum Impact and compression strength). Footwear meeting this requirement will

be so marked on the inside of the upper or tongue.

4.3.2 All Contractor/subcontractor personnel working within the Plant or Laboratory areas, including outdoor areas of the Plant, will be required to wear steel-toed boots as a minimum.

4.4 The Exide representative will designate additional personal protective equipment which must be used to protect contractor personnel from the hazards of specific work prior to the bid process. (i.e., NFPA 70E energized work PPE, Permit Confined Space, etc.)

4.5 Respiratory protection equipment is required for work by contractor/subcontractor personnel in certain areas. All personnel wearing respiratory protection equipment must be clean-shaven at the start of the shift and free of facial hair that interferes with the proper sealing of a respirator. The only permissible facial hair is sideburns and mustaches which do not extend further than past the ends of the mouth or down to the upper portion of the jaw bone. The contractor is responsible for complying with governmental regulations with regard to training and fit-testing of contractor employees. Documentation will be provided prior to beginning the assignment for individuals that are medically approved to wear a respirator in accordance with 29 CFR1910.134.

4.6 The contractor/subcontractor is responsible for providing all personal protective equipment for their personnel.

5.0 ALCOHOLIC BEVERAGES AND CONTROLLED SUBSTANCES

5.1 Contractors will abide by Exide's policy to maintain a drug free work environment. The presence on the job site of employees of the contractor or subcontractor who are under the influence of drugs or alcohol is inconsistent with, and a violation of, the contractor's obligation to complete work in a safe and efficient manner.

5.2 The contractor will notify its employees, subcontractors and material/delivery personnel that contractors and their employees are not permitted to bring on to any Exide work site any alcoholic beverage or controlled dangerous substance, as that term is defined in the "Controlled Dangerous Substance Act", nor to enter any Exide work site while under the influence of alcohol or any controlled dangerous substances

5.3 The contractor will not permit or condone its employees or employees of its subcontractors and material/delivery personnel to bring any alcoholic beverage or any controlled dangerous substance onto any Exide work site, or to work while under the influence of alcohol or any controlled dangerous substance.

5.4 The contractor will remove from Exide's work site any of its employees found to be in possession of, or under the influence of any alcoholic

beverage or any controlled dangerous substance while on Exide's work site, and will cause its subcontractors and material/delivery personnel to take similar action with respect to their employees. Any employee removed from an Exide work site pursuant to this provision shall not thereafter be allowed to enter an Exide work site.

5.5 Any contractor employee who has been seriously (OSHA Recordable or Lost Time) injured or who has caused serious injury to others shall be asked to test for the presence of drugs (including alcohol). Failure of the contractor employee to submit to the drug/alcohol test is grounds for termination of that employee from work the Exide facility, and may result in termination of the contract.

5.6 The contractor's failure to comply with the provisions of Section 5 of this Standard shall constitute grounds for termination of this contract or purchasing agreements. As used herein, Exide's work site includes not only the portion of Exide 's property on which the contractor is performing services hereunder, but also all of Exide's adjacent property, including other areas of its plant, access roads, parking lots, etc.

6.0 ACCIDENTS AND INJURIES

6.1 The contractor is responsible for providing emergency first aid treatment for his or her personnel and must assure same for all subcontractor personnel.

6.2 In the event that an injury is beyond minor first aid there is a staffed plant dispensary where contractors can go for additional medical supplies or emergency services.

6.3 The contractor must immediately report all injuries, spills, fires, incidents which include property damage and potentially serious incidents including near misses to the Exide representative. The contractor must investigate all reportable cases and implement the steps necessary to prevent a recurrence. All investigations of reportable cases must be documented in writing and copies of investigation reports submitted to the Exide representative. A review meeting will be required with the Exide representative.

6.4 Injury records maintained by the contractor will include:

OSHA Form 301 -	Supplementary Record of Occupational Injuries and Illnesses;
OSHA Form 300 -	Log and Summary of Occupational Injuries and Illnesses.

7.0 PERMITS

7.1 A Safe Work Permit is required to keep track of all contractor and subcontractor work in all areas. Permits will be issued by an Exide Authorized Signer for the area where work is to be performed to ensure a

safe and efficient job. Typically the area supervisor who has been trained is the appropriate authorized signer but if the work will be completed outside of a manufacturing area or is part of an engineering project, and project engineer(s) can act as the authorized signer if trained. All authorized signers shall serve to inform non-Exide personnel of the known fire, explosion, or toxic release hazards or other special conditions related to the work area and equipment. Failure to comply with the permit regulation shall be cause for immediate dismissal from the job site.

7.2 Additional permits are required for any contractor-subcontractor work in operating areas of the plant. Some specific examples for which additional work permits are required include, but are not limited to:

7.2.1 Confined Space Entry Permit

7.2.2 Hot Work Permit required

7.2.3 Excavation/ Digging Permit

7.2.4 Lockout / Tagout will generate Safe Work Permit.

7.2.5 Overhead crane will generate a Safe Work Permit

7.2.6 Non SOP task

7.2.7 Fire Impairment

7.3 Safety Work permits will be issued on a shift basis. Generally, Exide's work shifts are from 7 AM to 3 PM, 3 PM to 11 PM and 11 PM to 7 AM. Adjustments to these hours may be made on a case by case basis, but in no case is a safety work permit valid for more than one shift.

7.4 It is imperative that the conditions noted on the permit(s) are exactly identical to the job conditions. When the nature or conditions of a job change in any way, or when new tools are required or different methods are employed to do the job other than those originally covered in the initial permit, WORK SHALL STOP IMMEDIATELY because the permit is invalid. The permit is only good for what it describes - no more and no less. Work cannot progress until the situation can be carefully analyzed and a new permit issued for the new conditions.

7.5 Communication is the key to enhancing the effectiveness of the work permit system. Operators, plant supervisors, contractor employees, contractor supervision and the Exide representative should all be aware of the permit process and the specific requirements of each permit. This then allows each to review the ongoing work and look for possible changing conditions or deviations during their daily work routine. Permits will be issued to contractor supervision only. The contractor supervision will distribute the permit to contractor employees performing that work. Contractor

supervisors should also make sure contractor employees read the permit requirements. These permits must be posted in the work area. If the permit cannot be posted, it should be carried by one of the contractor workers in that area.

7.6 The contractor will comply with the specific Exide Vernon, CA site standards for Safety Work Permits, Energized Work, Lockout/Tagout, Hot Work, Line breaking and Confined Space Entry. Copies of these are available from the Exide representative.

7.7 All permits shall be turned into the H & S department at the end of each shift.

8.0 FIRE PROTECTION AND PREVENTION

8.1 When in or near an operating facility, Exide fire extinguishers may be employed by trained personnel in an emergency. Any use of extinguishing equipment shall be promptly reported to the Exide representative.

8.2 The contractor shall be responsible for the development of a fire protection program to be followed throughout all phases of the work and shall provide for the fire fighting equipment in accordance with regulations, these specifications and the requirements appropriate to the type of work being performed. This shall include, but not be limited to:

8.2.1 All fire fighting equipment provided by the contractor shall be conspicuously located, accessible, periodically inspected and maintained in good operating condition. Defective equipment shall be replaced immediately. The contractor shall give particular attention to training contractor personnel in the use of fire extinguishers and their limitations.

8.2.2 All compress gas cylinders shall be secured and stored properly

8.2.3 Additional employees, as needed, for fire watch.

8.2.4 Contactor shall have Maintenance or Project Manager or H & S cell number in case of emergency.

9.0 SAFETY TRAINING AND EDUCATION

9.1 The contractor shall instruct each employee in the recognition and corrections of at risk behaviors and at risk conditions.

9.2 The contractor shall acquaint each contractor employee with the safety and emergency equipment available and the procedures to be followed in each type of accident occurrence.

9.3 The Contractor shall provide its employees, agents and subcontractors training prior to starting the job. The training must, at a minimum, include the hazards of lead and the precautions necessary to prevent lead absorption. At a minimum up to date training documentation will be provided such as permit confined space, lockout/tagout, forklift, respirator training, etc. to the Health and Safety representative

9.4 All contractor personnel must receive an initial orientation by Health and Safety staff covering the safety and environmental procedures and the requirements of Exide. Contractor personnel will be required to sign a statement when they have received this orientation which states they will abide by all safety and environmental rules and regulations.

9.5 If, deemed necessary all contractor personnel shall attend a meeting to allow Exide to inform workers of present or expected plant conditions and safety related items.

10.0 SAFETY INSPECTIONS

10.1 At a minimum, the contractor shall check the work area daily at the beginning and at the end of each work shift (and after an extended break period such as lunch) to ensure safe working conditions (i.e., stable shoring, safe access and egress; all flames are extinguished, etc.).

10.2 The Exide representative and the contractor's supervisor will conduct and document periodic audits of the work area for unsafe acts and conditions.

11.0 HOUSEKEEPING AND HYGIENE

11.1 During the course of work, the contractor shall be responsible for properly organizing all activities on the job site to the extent that good housekeeping shall be practiced at all times. These shall include, but not be limited to:

11.1.1 As the job progresses, work areas must be kept clean at all times.

11.1.2 All materials, tools and equipment must be stored in a stable position to prevent rolling or falling. Materials and supplies shall be kept away from edges of floors, hoist ways, stairways and floor openings.

11.1.3 A safe access way to all work areas and storage areas must be maintained. All stairways, corridors, ladders, catwalks, ramps, passageways and work platforms shall be kept clear of loose material and trash.

11.1.4 Forms and scrap lumber with protruding nails and all other debris shall be cleared from work areas, passageways, and stairs and in and around buildings or other structures.

11.1.5 Combustible scrap and debris shall be removed at regular intervals. Safe means shall be provided to facilitate such removal.

11.1.6 If necessary, the contractor shall supply an adequate number of dumpsters to ensure a clean working area at all times. The contractor shall load and transport all refuse and debris to a suitable disposal site assigned by the Environmental Manager.

11.1.7 The contractor parking areas shall be maintained clean and free of paper and other debris at all times.

11.1.8 Beverages and Eating is not permitted in Production or Maintenance work areas or existing operating plant process areas. Drinking water is restricted except as specified by the Exide H & S representative.

11.1.9 Cords and hoses shall be strung at least 7' overhead when allowable or laid flat outside of walkways.

11.1.10 Tools and equipment shall not be strewn about where they might cause tripping or falling hazards and shall, at the end of each workday, be collected and stored in the tool room or craft gang boxes.

11.1.11 Each employee shall be instructed to practice required housekeeping as part of assigned duties.

11.1.12 The Contractor's employees, agents or subcontractors shall not leave the premises wearing this clothing. The Contractor shall make arrangements to properly package, transport, dispose or launder work clothing worn in the plant. If laundering, the persons or service provider that handles and launders the clothing shall be properly informed by Contractor of potential hazards.

11.1.13 All of Contractor's employees, agents and subcontractors must take a shower at the end of the workday, including washing their hair, prior to changing into clean clothing and leaving the premises.
All of Contractor's employees, agents and subcontractors must wash their hands and faces prior to eating and drinking. Tobacco products are prohibited on the facility, food or drinks are prohibited in the work area at any time. Food and drink may be present and consumed only in designated break rooms.

11.1.14 All of Contractor's employees, agents and subcontractors shall adhere to all Exide plant rules, including those set forth above, for entering break rooms and office areas, and rules.

12.0 MATERIAL HANDLING, STORAGE AND DISPOSAL

12.1 The contractor shall be responsible for using safe and environmentally sound methods of handling, storage, use and disposal of materials on the site. These shall include, but not be limited to:

12.1.1 All materials stored shall be stacked, braced, racked, blocked, interlocked or otherwise secured to prevent sliding, rolling, falling or collapse.

12.1.2 Rigging equipment for material handling shall be of the proper size and rating. All rigging equipment shall be inspected prior to use on each shift and as necessary during its use to ensure that it is safe. Defective rigging equipment shall be removed from service. All rigging equipment not in use shall be properly secured.

12.1.3 Disposal of debris or waste materials such as chemicals, oil, carcinogens, etc., shall comply with applicable plant environmental procedures, local ordinances and state regulations.

12.1.4 Storage locations for flammable materials (such as gasoline) for use by contractor(s) shall be in areas agreed to by the Exide representative. These areas shall be diked to retain spilled material and have an appropriately placed fire extinguisher.

12.2 The contractor shall take steps necessary to prevent discharging of lubricating oils and cleaning solvent onto the ground and/or into sewers and sewage disposal systems to prevent contaminating rivers, streams and the environment. These fluids (after use) shall be stored in properly labeled appropriate containers and disposed of in a legal manner conforming to all applicable regulations.

13.0 ELEVATED WORK

13.1.1 The use and erection of ladders and scaffolds shall comply with governmental regulations.

13.1.2 Approved full body safety harnesses must be worn when performing unprotected elevated work. (Note: Safety belts are no longer acceptable).

13.1.3 Unprotected, elevated work that is 4' or more above the lower level requires a personal fall arrest system.

14.0 EXCAVATIONS, TRENCHING AND SHORING

14.1 Excavations must be shored or sloped before entering, and protected according to governmental regulations.

14.2 Contact must be made with Exide Representative prior to any excavation.

14.3 The location and identification of underground utilities is the responsibility of Exide.

15.0 CONCRETE FORMS AND SHORING

15.1 All equipment and materials used in concrete construction and masonry work shall meet the appropriate requirements such as those in ANSI A10.9 Wall shoring shall also be designed to meet applicable federal and state codes, including OSHA 1926.701 in the U.S.

16.0 CRANE WORK

16.1 Contractors and/or subcontractors will be responsible for providing their Exide representative with a copy of a lift plan prior to the commencement of any rigging activities.

16.2 Mobilization of any crane must be communicated and coordinated through the Exide representative prior to arriving on site.

17.0 MISCELLANEOUS PROVISIONS

17.1 The contractor shall ensure that construction areas, aisles, stairs, ramps, runways, corridors, offices, shapes and storage areas where work is in progress shall be adequately lighted with either natural or artificial illumination.

17.2 All hand and power tools and similar equipment, whether furnished by the contractor or contractor employees, must be equipped with a GFCI and shall be maintained in a safe operating condition with all guards in place. Damaged tools shall be immediately repaired or replaced. Tools shall be used only for the purpose for which they were designed.

17.3 Loose clothing, rings and other jewelry shall not be worn around operating tools or machines. Sleeves will be kept buttoned.

17.4 The contractor is solely responsible for contractor equipment and goods. Exide Technologies is not responsible for any losses by theft or any other reason of the contractor's property.

17.5 The contractor will ensure no aluminum cans are brought onto the facility.

17.6 Any equipment moved or removed in the course of performing Work must be returned to its original condition/position prior to completion of the job, to include but not be limited to, guardrails, machine guards, doors, covers, seals, gaskets, lids, and the like.

17.7 Barricade tape in the plant consists of two colors, yellow and red. Yellow tape is caution tape. Yellow caution tape can be crossed if hazards are

known. Red tape is danger tape. Red tape cannot be crossed until approval has been granted by the authorized signer or supervisor of the crew by informing you of hazards inside.

17.8 Pedestrian traffic shall be limited to only the assignment area of job task. Roaming around is restricted to avoid forklift, front end loaders, semi traffic, etc.

17.9 Gambling, fighting and horseplay are not permitted on Exide property.

17.10 Medical Blood Monitoring: The Contractor is solely responsible for arranging for and paying for medical monitoring of its employees, agents and subcontractors that work at Exide. Upon request, Exide may provide a list of then known medical monitoring service providers in the local area. By providing this list Exide is in no way certifying the suitability of the service providers to meet applicable requirements. A blood sample must be taken at regular intervals to indicate and document the amount of lead a worker has absorbed. Contractor shall provide a monthly update on Form EHSNA-106-B, to the Exide Plant H &S Manager to document blood lead levels of the Contractor's employees, agents and subcontractors.

EXIDE RESPONSIBILITIES

1.0 ASSIGNMENT OF AN EXIDE REPRESENTATIVE

1.1 The name and contact information for the assigned Exide Representative will be the contact to all contractors and provide their cell number in case of emergency.

2.0 PRE-WORK AND WORK IN PROGRESS REQUIREMENTS

2.1 Prior to the start of work, the Exide representative will introduce and explain the following:

2.1.1 The requirements described in this booklet;

2.1.2 Any additional rules, regulations or requirements of the worksite;

2.1.3 The Notice to Third-Party Employers provided in the bid package;

2.1.4 Coordinating the issuing of safety work permits;

2.1.5 Completing the pre-work safety and environmental checklist;

2.2 During the course of work, the Exide representative will ensure the following:

2.2.1 Complete weekly audit of contractor and subcontractor safety and environmental performance; and,

2.2.2 Review all injuries, spills, fires and potentially serious incidents and including near miss incidents sustained by contractor personnel.

3.0 HAZARD COMMUNICATION

3.1 It is the Contractor's duty to comply with all federal, state, local and Exide environmental, health and safety regulations, including OSHA safety and health standards including, but not limited to, the OSHA Lead Standard, 29 CFR §1910.1025.

3.2 The contractor will provide a hazardous chemical inventory for contractor-supplied hazardous materials and corresponding Material Safety Data Sheets. Contractors are required to inform the Exide representative prior to bringing hazardous substances on site and to update the hazardous chemical inventory.

3.3 Contractors are required to strictly enforce container labeling. Labels are to include the identity of the substance and the appropriate hazard

warning on all containers of hazardous substances as detailed in OSHA's Hazard Communication Standard 29CFR 1910.1200

4.0 PRE-WORK MEETING

4.1 Before work begins, the Exide Plant HS Manager, or a designated representative, shall meet with the Contractor and agree with the Contractor on the tasks to be performed at the facility, the number of employees, the potential exposures to lead and other hazardous materials, the time to be spent at the facility, protective equipment required, the medical monitoring program and reporting required, and other regulations and policies that apply to the Contractor's work.

5.0 TRAINING, PPE and MONITORING

5.1 Contractors are required to perform their own training, provide their own personal protective equipment, and conduct their own monitoring as required by the applicable standards. In exceptional situations where an independent contractor cannot practicably provide certain hygiene services such as showers, lockers or laundered work clothing, and it is performing work which may involve exposure to lead, arsenic, cadmium or other hazardous materials, Exide may provide use of its locker room, shower facilities and laundry service in exchange for the indemnities given in the Independent Contractor Agreement and for a monetary charge – the amount or rate for which shall be documented in the original contract; or, before work begins in a document similar to Form EHS-NA-106-C. Personal protective equipment, such as respirators, hard hats and eye protection, are required to be provided by the Contractor to its employees, agents and subcontractors. Unlike hygiene services such as showers and lockers, personal protective equipment shall never be provided (including, but not limited to, rental, sale or loan) by Exide to a Contractor, its agents, employees or subcontractors.

5.2 The Plant Engineering Manager or equivalent, shall ensure that an Exide representative of Supervisor level or higher, designated by the Engineering Manager, shall be present on-site at all times when Contractor's employees, agents or subcontractors are provided access to an Exide worksite.

6.0 ALUMINUM MATERIALS AND AEROSOL CANS

6.1 Large quantities of scrap materials from within Exide plants are transported and recycled at secondary lead smelters. When aluminum materials and aerosol cans come in contact with the high temperatures of smelting furnaces, an explosive condition can result. To ensure that these materials do not enter the feed material at smelters, Exide facility-wide standard safety rules generally prohibit Contractors from bringing aluminum materials and materials in aerosol cans onto the facility premises. This includes liquid beverage cans that may be brought in with personal lunches. By signing the Independent Contractor Agreement, Contractors working onsite at Exide facilities acknowledge that they have been notified and have notified their employees, agents and subcontractors that aluminum materials and aerosol cans

are prohibited. Contractors who claim their employees, agents or subcontractors must work with Aluminum materials and do not have an alternative must give notice of this in writing to the Exide location manager prior to bringing such materials onsite. This notification shall certify that the Contractor will bear responsibility for and will maintain control of and segregate any and all scrap aluminum materials and will place them in the accumulation area designated by Exide.

6.2 Contractors whose employees, agents or subcontractors are working with necessary materials in aerosol cans that do not have non-aerosol alternatives must obtain a written exception approval, prior to commencement of such Contractor services, to allow them to bring the aerosol cans onto the Exide premises. Contractors using approved materials in aerosol cans must incorporate their materials into the facility inventory and exchange program.

Please complete the information below certifying that you have received a copy of the contractor handbook and that you understand and will communicate the Environmental, Health & Safety and security requirements of the Exide Technologies, Vernon, California site.

Contract Company Name:

Signature: _____

Print Name: _____

Title: _____

Date: _____

_____
(Authorized representative of contractor or subcontractor)

APPENDIX H

Cost Estimate

COST ESTIMATE
STORM SEWER REMOVAL ACTION WORK PLAN
EXIDE TECHNOLOGIES
VERNON, CALIFORNIA

Item	Quantity	Unit	Unit Cost	Extended Cost	Reference
Pre-Excavation Sampling					
Sampling Crew	18	days	$ 2,200	$39,600	Similar project
Geoprobe	12	days	$ 1,400	$16,800	Similar project
Laboratory Analysis (metals, pH, sulfate)	700	samples	$92	$64,400	CalScience quote
Laboratory Analysis (VOCs/SVOCs)	70	samples	$196	$13,720	CalScience quote
XRF Analysis	2	week	$ 1,200	$2,400	Niton quote
Pipe Removal					
Mobilization	1	LS	$5,000	$5,000	Similar project
Enclosures	3	LS	$10,000	$30,000	Similar project
Excavation and Handling (5,000 cy, 200 cy/day)	25	days	$7,968	$200,676	Means
Abandon In-place	200	lf	$75	$15,000	Similar project
Post-Excavation Sampling					
Sampling Crew	25	days	$3,200	$80,000	Similar project
XRF Analysis	6	weeks	$1,200	$7,200	Niton quote
Off-Site Disposal					
Off-Site Hazardous Disposal	8,000	tons	$180	$1,440,000	Landfill quote
Restoration					
Geotextile	10,578	sy	$4.50	$47,600	Similar project
Backfill (where no proposed pipe, or to proposed pipe subgrade)	3500	cy	$15	$52,500	Similar project
TOTAL				$2,014,896	