ADVANCED GeoServices
Engineering for the Environment. Planning for People.
1055 Andrew Drive, Suite A, West Chester, PA 19380-4293
tel 610.840.9100 fax 610.840.9199
www.advancedgeoservices.com

May 2, 2014 2013-2993-08

Mr. William Veile
California Department of Toxic Substances Control
Office of Permitting
8800 Cal Center Drive
Sacramento, CA 95826-3200

RE: Interim Status (Class 2) Modification – Surge Tank (Unit 79), Centrifuge No. 2 (Unit 81), and Ancillary Sumps
Exide Technologies
Vernon, California
CAD 097 854 541

Dear Mr. Veile:

Advanced GeoServices, on behalf of Exide Technologies, submits this Interim Status (Class 2) Modification for the addition of one tank and one miscellaneous unit at the Exide Technologies facility in Vernon, California (CAD 097 854 541). Specifically, the proposed tank is the Surge Tank (Unit 79). The proposed miscellaneous unit is Centrifuge No. 2 (Unit 81). This modification also proposes to add four wash water collection sumps which DTSC considers to be ancillary to existing Interim Status units. Exide operates a secondary lead recycling facility at this location for the recovery of lead from automotive batteries and other lead-bearing materials received from off-site and generated on-site.

The Interim Status Modification is being prepared in accordance with Class 2 Permit Modification requirements in California Code of Regulations, Title 22, Chapter 20, Article 4, 66270.42(b). A Class 2 modification is required as noted in CCR, Title 22, Chapter 20, Article 7, Appendix I, G.1.b as the addition of the tanks results in a less than 25% increase in the facility's tank capacity. DTSC approval of this modification is required prior to implementation.

The physical location and process flow for each proposed unit are provided on the attached figures. Please note that unit numbers are intentionally non-sequential. Additional detail for each proposed unit is provided below. These units will be included in the Closure Plan and Closure Cost Estimate submitted with the Part B Permit Application Revision 7b.

SURGE TANK (UNIT 79)

Unit 79, Surge Tank, will be a 4,925 gallon HDPE tank for storage of filtrate from the WWTP Filter Press (Unit 44) and RMPS Filter Press Unit B (Unit 45). The tank dimensions are 9 feet in diameter by 11 feet 11 inches high. Overfill protection will be provided by an overflow pipe.

The tank will be located in RMPS as shown on the attached figure. Manufacturer design drawings and calculations are attached.

The Surge Tank is a necessary proactive measure to help relieve pressure on the outlet of the filter presses, which will ensure continued proper operations. Filtrate in the tank will be transferred to the Wastewater Treatment Plant (WWTP) via existing aboveground piping from the filter presses to the WWTP. The treatment rate is 250,000 gallons per day. Addition of the Surge Tank does not increase facility production rates/capacity; it simply enhances and maintains good operation.

An engineering certification for the Surge Tank will be provided once the tank is installed and the tank tightness test is complete. The existing secondary containment for RMPS is adequate to include the Surge Tank and complies with Title 22, 66264.193. Revised secondary containment calculations are attached.

The Surge Tank is proposed to be installed as soon as DTSC approval is received.

CENTRIFUGE NO. 2 (UNIT 81)

Unit 81, Centrifuge No. 2, will be a miscellaneous unit for separation of rinse water and plastic chips, similar to the existing centrifuge at the facility. The centrifuge dimensions are 8 ft 4 inches by 6 ft 4 inches by 11 feet 3 inches high. The centrifuge will be constructed of 304 stainless steel. The centrifuge will be located in RMPS as shown on the attached figure. Manufacturer design information is attached.

Centrifuge No. 2 is necessary to increase capacity for separation of rinse water and plastic chips. The design treatment rate is 6,000 to 7,000 lb/hr. Separated liquids will be transferred to Unit No. 6. Separated chips will be transferred to a tractor trailer for shipment off-site for further recycling.

Secondary containment calculations do not apply to miscellaneous units as material is not stored in the unit.

Exide anticipates installation of Centrifuge No. 2 in August 2014 or later.

BAGHOUSE BUILDING SUMP 3

Baghouse Building Sump 3, will be a 30 gallon double-lined sump for management of washdown water within the Baghouse Building which DTSC considers to be ancillary to Units 31 and 32 (North and South Flue Dust Slurry Tanks). The sump will be constructed of concrete lined with stainless steel. A leak detector will be installed in the leak detection zone between the

stainless steel and concrete. The tank dimensions are 18.5 inches by 18.5 inches by 20.5 inches deep. The tank will be located in the Baghouse Building as shown on the attached figure. Design drawings are attached.

Baghouse Building Sump 3 is necessary to provide a location for collection of washdown water within the Baghouse Building. Liquids in the sump will be transferred via aboveground piping to the North and South Flue Dust Slurry Tanks (Units 31 and 32).

Secondary containment calculations do not apply for double-lined in-ground sumps.

Baghouse Building Sump 3 is proposed to be installed as soon as DTSC approval is received.

OXIDATION TANK AREA SUMP

Oxidation Tank Area Sump, will be a 30 gallon double-lined sump for management of washdown water within the Oxidation Tank Area which DTSC considers to be ancillary to Units 31 and 32 (North and South Flue Dust Slurry Tanks). The sump will be constructed of concrete lined with stainless steel. A leak detector will be installed in the leak detection zone between the stainless steel and concrete. The tank dimensions are 18.5 inches by 18.5 inches by 20.5 inches deep. The tank will be located in the Oxidation Tank Area as shown on the attached figure. Design drawings are attached.

Oxidation Tank Area Sump is necessary to provide a location for collection of washdown water within the Oxidation Tank Area. Liquids in the sump will be transferred via aboveground piping to the North and South Flue Dust Slurry Tanks (Units 31 and 32).

Secondary containment calculations do not apply for double-lined in-ground sumps.

The Oxidation Tank Area Sump is proposed to be installed as soon as DTSC approval is received.

MUD TANK AREA SUMP 1

Mud Tank Area Sump 1, will be a 30 gallon double-lined sump for management of washdown water within the Mud Tank Area which DTSC considers to be ancillary to Units 7, 8 and 9 (Mud Tanks). The sump will be constructed of concrete lined with stainless steel. A leak detector will be installed in the leak detection zone between the stainless steel and concrete. The tank dimensions are 18.5 inches by 18.5 inches by 20.5 inches deep. The tank will be located in the Mud Tank Area as shown on the attached figure. Design drawings are attached.

Mud Tank Area Sump 1 is necessary to provide a location for collection of washdown water within the Mud Tank Area. Liquids in the sump will be transferred via aboveground piping to the Mud Tanks (Units 7, 8 and 9).

Secondary containment calculations do not apply for double-lined in-ground sumps.

Mud Tank Area Sump 1 is proposed to be installed as soon as DTSC approval is received.

MUD TANK AREA SUMP 2

Mud Tank Area Sump 2, will be a 30 gallon double-lined sump for management of washdown water within the Mud Tank Area which DTSC considers to be ancillary to Unit 5 (Battery Dump Bin Sump). The sump will be constructed of concrete lined with stainless steel. A leak detector will be installed in the leak detection zone between the stainless steel and concrete. The tank dimensions are 18.5 inches by 18.5 inches by 20.5 inches deep. The tank will be located in the Mud Tank Area as shown on the attached figure. Design drawings are attached.

Mud Tank Area Sump 2 is necessary to provide a location for collection of washdown water within the Mud Tank Area. Liquids in the sump will be transferred via aboveground piping to the Battery Dump Bin Sump (Unit 5).

Secondary containment calculations do not apply for double-lined in-ground sumps.

Mud Tank Area Sump 2 is proposed to be installed as soon as DTSC approval is received.

PUBLIC NOTICE

A notice will be sent to the facility mailing list in accordance with Title 22, 66270.42(b) and the appropriate unit of state and local government within 7 days before or after this letter. The notice will also be published in Eastside Sun, La Opinion, Long Beach Press Telegraph and Bell/Maywood Industrial Post newspapers within 7 days before or after this letter. Proof of mailing and newspaper publication will be provided to DTSC when available. The 60-day public comment period begins on the date of newspaper publication (May 6, 2014). A public meeting will be held on May 22, 2014 from 6 to 8 pm at the Double Tree Hotel at 5757 Telegraph Road, Commerce, CA 90040.

If you have any questions, please contact John Hogarth at Exide at (323) 262-1101 or Jen DiJoseph at Advanced GeoServices at (610) 840-9189.

Sincerely,

ADVANCED GEOSERVICES

Jennifer W. DiJoseph
Associate Project Consultant

Paul G. Stratman, P.E.
Senior Project Consultant

REGISTERED PROFESSIONAL ENGINEER
PAUL GERARD STRATMAN
NO. C61595
EXP. 6/30/15
CIVIL
STATE OF CALIFORNIA

JWD:PGS:vm

Enclosure

cc: John Hogarth, Exide
Ed Mopas, Exide
Wilson Durant, Exide
Dan Henke, Exide
Repository

PUBLIC NOTICE

PUBLIC NOTICE OF AN INTERIM STATUS MODIFICATION REQUEST
EXIDE TECHNOLOGIES, EPA ID NO. CAD 097 854 541

On April 11 and May 2, 2014, Exide Technologies (Exide), 2700 South Indiana Avenue, Vernon, California, 90058 submitted applications for Interim Status Modifications to the State of California, Department of Toxic Substances Control (DTSC), 8800 Cal Center Drive, Sacramento, California 95826-3200. DTSC is the State agency authorized to issue or deny applications for hazardous waste facility permits and other forms of authorization pursuant to the California Hazardous Waste Control Law and its implementing regulations.

Exide operates a metal (lead) treatment and storage/recycling facility at the Vernon location for the recovery of lead from automotive batteries and other lead-bearing materials received from off-site and generated on-site.

The Interim Status Modification application submitted April 11, 2014 addresses replacement of one miscellaneous unit. Specifically, Unit 45 (RMPS Filter Press Unit B) will be removed and replaced with a similar miscellaneous unit. The miscellaneous unit replacement is needed to improve operations. The original miscellaneous unit will be decontaminated, demolished and disposed off-site. The replacement miscellaneous unit has similar dimensions to the original miscellaneous unit, along with a smaller treatment capacity. There was no change in waste management or treatment process. The waste managed by this unit, the process flow diagram, treatment rate, and secondary containment have not changed. This is a Class 1 modification and it does not require DTSC's prior approval before the change is put into effect.

The Interim Status Modification application submitted May 2, 2014 addresses the installation of one tank and one miscellaneous unit. Specifically, the proposed tank is the Surge Tank (Unit 79). The proposed miscellaneous unit is Centrifuge No. 2 (Unit 81). The modification also proposes to add four wash water collection sumps which DTSC considers to be ancillary to existing Interim Status Units. The Surge Tank is a necessary proactive measure to ensure proper operations and reduce potential disruption of waste management activities. Centrifuge No. 2 is necessary to increase capacity for separation of rinse water and plastic chips.

A 60-day public comment period on the May 2, 2014 Interim Status Modification request begins on the date of this publication (May 6, 2014). Comments shall be sent to Bill Veile, DTSC, 8800 Cal Center Drive, Sacramento, California 95826-3200. A public meeting regarding the May 2, 2014 Interim Status Modification request will be held on May 22, 2014 from 6 to 8 p.m. at the Double Tree Hotel at 5757 Telegraph Road, Commerce, California 90040.

The public is invited to review information about the Exide facility and documents related to the Interim Status Modifications at the Maywood Cesar Chavez Public Library, 4323 Slauson Avenue, Maywood or Department of Toxic Substances Control, 5796 Corporate Avenue, Cypress. During normal business hours, please call (714) 484-5337 for an appointment. To view electronic versions of Exide project documents, please visit DTSC's website: http://www.dtsc.ca.gov/HazardousWaste/Projects/exide.cfm. The permittee's compliance history during the life of the permit being modified is available from the Department contact person.

A copy of the Interim Status Modifications and supporting documents are available for review at the Exide facility at 2700 South Indiana Avenue, Vernon, California 90058.

You are receiving this notification because you have expressed interest in matters concerning the Exide Facility and/or you are on the facility mailing list. If you have any questions regarding the Interim Status Modifications, please contact Ed Mopas, Exide Environmental Manager, at (323) 262-1101 ext. 259 or Bill Veile, DTSC contact person at (916) 255-3605.

TABLE

ATTACHMENT A-2
HAZARDOUS WASTE MANAGEMENT UNIT DESCRIPTIONS

Unit No	Unit Description	Activity Type	Content	Waste Codes		Tank/ Unit Size	Tank/Unit Material	Maximum Capacity	Treatment Rate	Treatment Type	Overfill Protection	Secondary Containment	Structural Certification	Permit Status
1	Central Container Storage Building	Container Storage Area	Spent lead-acid batteries; lead-bearing plant scrap	132, 181, 721, 722, 723, 724, 791, 792, 171, 172	D002, D004, D005, D006, D007, D008, D010, K069	12,000 square feet	Acid resistant epoxy coated, sloped reinforced concrete	99,840 batteries and 210 drums or a total of 99,840 gallons	Not applicable	Not applicable	Operational procedures	Independently sloped to collection point, which drains to Cooling Tower Sump Minimum capacity: 12,342 gallons	Gerald E. Stuth, 6/30/89	Interim Status
2	West Container Storage Building #1	Container Storage Area	Spent lead-acid batteries; lead-bearing plant scrap	132, 181, 721, 722, 723, 724, 791, 792, 171, 172	D002, D004, D005, D006, D007, D008, D010, K069	2,720 square feet	Acid resistant epoxy coated, sloped reinforced concrete	24,960 batteries and 48 drums or a total of 24,960 gallons	Not applicable	Not applicable	Operational procedures	Independently sloped to collection point, which drains to Cooling Tower Sump Minimum capacity: 3,391 gallons	Gerald E. Stuth, 6/30/89	Interim Status
3	West Container Storage Building #2	Container Storage Area	Spent lead-acid batteries; lead-bearing plant scrap	132, 181, 721, 722, 723, 724, 791, 792, 171, 172	D002, D004, D005, D006, D007, D008, D010, K069	1,292 square feet	Acid resistant epoxy coated, sloped reinforced concrete	14,560 batteries and 24 drums or a total of 14,560 gallons	Not applicable	Not applicable	Operational procedures	Independently sloped to collection point, which drains to Cooling Tower Sump Minimum capacity: 1,611 gallons	Gerald E. Stuth, 6/30/89	Interim Status
4	Canopied Container Storage Building	Container Storage Area	**Closed Unit**	NA	NA	Not applicable	Not applicable	Not applicable	Not applicable	Not applicable	Not applicable	Not applicable	Not applicable	Closed Unit
5	Battery Dump Bin Sump	Tank	24% sulfuric acid solution	132, 181, 721, 722, 723, 724, 791, 792, 171, 172	D002, D004, D005, D006, D007, D008, D010, K069	4’2” x 8’3.5” x 4’	Double-walled stainless steel	934 gallons	Not applicable	Not applicable	None	Double-walled sump with leak detection	See tank certification	Interim Status
6	RMPS Floor Sump	Tank	Sodium sulfate solution	132, 181, 721, 722, 723, 724, 791, 792, 171, 172	D002, D004, D005, D006, D007, D008, D010, K069	5'-0" x 9'-0" x 4'-0"	Double-walled stainless steel	1,185 gallons	Not applicable	Not applicable	None	Double-walled sump with leak detection	See tank certification	Interim Status
7	North Mud Tank	Tank	Lead sulfate paste; Lead oxide; lead sulfate; lead carbonate; sodium sulfate; sodium carbonate	132, 181, 721, 722, 723, 724, 791, 792, 171, 172	D002, D004, D005, D006, D007, D008, D010, K069	18'-0" Diameter x 22'-0" Height	Stainless steel	41,875 gallons	310,000 gallons per day	Desulfurization	Overflow pipe	Desulfurization Area Minimum capacity: 41,875 gallons.	See tank certification	Interim Status
8	Center Mud Tank	Tank	Lead sulfate paste; Lead oxide; lead sulfate; lead carbonate; sodium sulfate; sodium carbonate	132, 181, 721, 722, 723, 724, 791, 792, 171, 172	D002, D004, D005, D006, D007, D008, D010, K069	18'-0" Diameter x 22'-0" Height	Stainless steel	41,875 gallons	310,000 gallons per day	Desulfurization	Overflow pipe	Desulfurization Area Minimum capacity: 41,875 gallons.	See tank certification.	Interim Status
9	South Mud Tank	Tank	Lead sulfate paste; Lead oxide; lead sulfate; lead carbonate; sodium sulfate; sodium carbonate	132, 181, 721, 722, 723, 724, 791, 792, 171, 172	D002, D004, D005, D006, D007, D008, D010, K069	18'-0" Diameter x 22'-0" Height; 1'-6" Freeboard	Stainless steel	41,875 gallons	310,000 gallons per day	Desulfurization	Overflow pipe	Desulfurization Area Minimum capacity: 41,875 gallons.	See tank certification	Interim Status
10	South Acid Storage Tank	Tank	24% sulfuric acid solution	132, 181, 721, 722, 723, 724, 791, 792, 171, 172	D002, D004, D005, D006, D007, D008, D010, K069	13’9” Diameter x 16’ 3 ¾” Height; 3'-0" Freeboard	Polyethylene	13,650 gallons	Not applicable	Not applicable	None	Desulfurization Area Minimum capacity: 41,875 gallons.	See tank certification	Interim Status
11	Overflow Tank	Tank	**Tank decontaminated and demolished.**	NA	NA	Not applicable	Not applicable	Not applicable	Not applicable	Not applicable	Not applicable	Not applicable	Not applicable	Preliminary Closure Report submitted. Supplemental Report will be submitted following sampling.

Unit No	Unit Description	Activity Type	Content	Waste Codes		Tank/ Unit Size	Tank/Unit Material	Maximum Capacity	Treatment Rate	Treatment Type	Overfill Protection	Secondary Containment	Structural Certification	Permit Status
12	Paste Thickening Unit (Santa Maria)	Tank	Lead Sulfate Paste; Lead oxide; lead sulfate; lead carbonate; sodium sulfate; sodium carbonate	132, 181, 721, 722, 723, 724, 791, 792, 171, 172	D002, D004, D005, D006, D007, D008, D010, K069	34’ 4 3/8” Length x 8'-2" Width x 12'-10" Height; 1'-2" Freeboard	Stainless steel	24,079 gallons	310,000 gallons per day	Gravity separation	Overflow flume	Raw Material Preparation System Building Minimum capacity: 24,079 gallons.	See tank certification.	Interim Status
13	Sink/Float Separator	Tank	Plastic;dilute sulfuric acid	132, 181, 721, 722, 723, 724, 791, 792, 171, 172	D002, D004, D005, D006, D007, D008, D010, K069	8'-0" Width x 22'-2.4" Length x 0' to 4'-8" Height; 0'-6" Freeboard	Stainless steel	5,808 gallons	310,000 gallons per day	Gravity separation	Overflow flume	Raw Material Preparation System Building Minimum capacity: 24,079 gallons.	See tank certification.	Interim Status
14	Recycle Tank	Tank	dilute sulfuric acid	132, 181, 721, 722, 723, 724, 791, 792, 171, 172	D002, D004, D005, D006, D007, D008, D010, K069	7'-0" Height x 22'-6" Length x 7'-6" Width; 16" Freeboard	Stainless steel	3,635 gallons	Not applicable	Not applicable	Overflow pipe	Raw Material Preparation System Building Minimum capacity: 24,079 gallons.	See tank certification	Interim Status
15	50K Tank	Tank	**Tank decontaminated and demolished.**	NA	NA	Not applicable	Not applicable	Not applicable	Not applicable	Not applicable	Not applicable	Not applicable	Not applicable	Preliminary Closure Report submitted. Supplemental Report will be submitted following sampling.
16	West Reaction Tank	Tank	**Tank decontaminated and demolished.**	NA	NA	Not applicable	Not applicable	Not applicable	Not applicable	Not applicable	Not applicable	Not applicable	Not applicable	Preliminary Closure Report submitted. Supplemental Report will be submitted following sampling.
17	East Reaction Tank	Tank	**Tank decontaminated and demolished.**	NA	NA	Not applicable	Not applicable	Not applicable	Not applicable	Not applicable	Not applicable	Not applicable	Not applicable	Preliminary Closure Report submitted. Supplemental Report will be submitted following sampling.
18	Pump Tank	Tank	**Tank decontaminated and demolished.**	NA	NA	Not applicable	Not applicable	Not applicable	Not applicable	Not applicable	Not applicable	Not applicable	Not applicable	Preliminary Closure Report submitted. Supplemental Report will be submitted following sampling.
19	Sludge Tank	Tank	**Tank decontaminated and demolished.**	NA	NA	Not applicable	Not applicable	Not applicable	Not applicable	Not applicable	Not applicable	Not applicable	Not applicable	Preliminary Closure Report submitted. Supplemental Report will be submitted following sampling.
20	Delta Stack Flocculation	Tank	**Tank decontaminated and demolished.**	NA	NA	Not applicable	Not applicable	Not applicable	Not applicable	Not applicable	Not applicable	Not applicable	Not applicable	Preliminary Closure Report submitted. Supplemental Report will be submitted following sampling.
21	Delta Stack Clarifier	Tank	**Tank decontaminated and demolished.**	NA	NA	Not applicable	Not applicable	Not applicable	Not applicable	Not applicable	Not applicable	Not applicable	Not applicable	Preliminary Closure Report submitted. Supplemental Report will be submitted following sampling.
22	East Equalization Tank	Tank	**Tank decontaminated and demolished.**	NA	NA	Not applicable	Not applicable	Not applicable	Not applicable	Not applicable	Not applicable	Not applicable	Not applicable	Preliminary Closure Report submitted. Supplemental Report will be submitted following sampling.
23	West Equalization Tank	Tank	**Tank decontaminated and demolished.**	NA	NA	Not applicable	Not applicable	Not applicable	Not applicable	Not applicable	Not applicable	Not applicable	Not applicable	Preliminary Closure Report submitted. Supplemental Report will be submitted following sampling.

Unit No	Unit Description	Activity Type	Content	Waste Codes		Tank/ Unit Size	Tank/Unit Material	Maximum Capacity	Treatment Rate	Treatment Type	Overfill Protection	Secondary Containment	Structural Certification	Permit Status
24	North Oxidation Tank	Tank	Wastewater, Sodium sulfate solution	132, 181, 721, 722, 723, 724, 791, 792, 171, 172	D002, D004, D005, D006, D007, D008, D010, K069	16'-0" Diameter x 35'-0" Height; 3'-0" Freeboard	Fiberglass reinforced plastic	52,638 gallons	43,200 gallons per day	Oxidation	Overflow pipe	Oxidation Tank Area Minimum capacity: 58,802 gallons.	See tank certification	Interim Status
25	South Oxidation Tank	Tank	Wastewater, Sodium sulfate solution	132, 181, 721, 722, 723, 724, 791, 792, 171, 172	D002, D004, D005, D006, D007, D008, D010, K069	16'-0" Diameter x 35'-0" Height; 3'-0" Freeboard	Fiberglass reinforced plastic	52,638 gallons	43,200 gallons per day	Oxidation	Overflow pipe	Oxidation Tank Area Minimum capacity: 58,802 gallons.	See tank certification	Interim Status
26	pH Adjustment Tank #1	Tank	**Tank decontaminated and demolished.**	NA	NA	Not applicable	Not applicable	Not applicable	Not applicable	Not applicable	Not applicable	Not applicable	Not applicable	Preliminary Closure Report submitted. Supplemental Report will be submitted following sampling.
27	pH Adjustment Tank #2	Tank	**Tank decontaminated and demolished.**	NA	NA	Not applicable	Not applicable	Not applicable	Not applicable	Not applicable	Not applicable	Not applicable	Not applicable	Preliminary Closure Report submitted. Supplemental Report will be submitted following sampling.
28	pH Adjustment Tank #3	Tank	**Tank decontaminated and demolished.**	NA	NA	Not applicable	Not applicable	Not applicable	Not applicable	Not applicable	Not applicable	Not applicable	Not applicable	Preliminary Closure Report submitted. Supplemental Report will be submitted following sampling.
29	Process Tank	Tank	**Tank decontaminated and demolished.**	NA	NA	Not applicable	Not applicable	Not applicable	Not applicable	Not applicable	Not applicable	Not applicable	Not applicable	Preliminary Closure Report submitted. Supplemental Report will be submitted following sampling.
30	Filtrate Tank	Tank	**Tank decontaminated and demolished.**	NA	NA	Not applicable	Not applicable	Not applicable	Not applicable	Not applicable	Not applicable	Not applicable	Not applicable	Preliminary Closure Report submitted. Supplemental Report will be submitted following sampling.
31	North Flue Dust Slurry Tank	Tank	Lead dust slurry	132, 181, 721, 722, 723, 724, 791, 792, 171, 172	D002, D004, D005, D006, D007, D008, D010, K069	9' x 5' Oblong x 5'2" Tall; 6" freeboard	Double-walled stainless steel . Note: This unit was originally a sump. The sump was reportedly cleaned to remove sediment then filled with concrete. New tanks site on top of filled sump.	1,532 gallons	Not applicable	Not applicable	Level gauge	Double-walled tank with leak detection	See tank certification	Interim Status
32	South Flue Dust Slurry Tank	Tank	Lead dust slurry	132, 181, 721, 722, 723, 724, 791, 792, 171, 172	D002, D004, D005, D006, D007, D008, D010, K069	9' x 5' Oblong x 5'2" Tall	Double-walled stainless steel .Note: This unit was originally a sump. The sump was reportedly cleaned to remove sediment then filled with concrete. New tanks site on top of filled sump.	1,532 gallons	Not applicable	Not applicable	Level gauge	Double-walled tank with leak detection	See tank certification	Interim Status
33	Reverb Furnace Feed Room	Containment Building	Reverb Furnace feed	132, 181, 721, 722, 723, 724, 791, 792, 171, 172	D002, D004, D005, D006, D007, D008, D010, K069	29,479 square feet	Sloped reinforced concrete	4,379 cubic yards	Not applicable	Not applicable	Curbs at doorways	Not applicable - double-lined	Willie T. Grant, 1/15/81. Liner system certified 3/28/00, William Greenbecker, P.E.	Interim Status

Unit No	Unit Description	Activity Type	Content	Waste Codes		Tank/ Unit Size	Tank/Unit Material	Maximum Capacity	Treatment Rate	Treatment Type	Overfill Protection	Secondary Containment	Structural Certification	Permit Status
34	Blast Furnace Feed Room	Containment Building	Blast Furnace feed	132, 181, 721, 722, 723, 724, 791, 792, 171, 172	D002, D004, D005, D006, D007, D008, D010, K069	11,250 square feet	Sloped reinforced concrete	1,486.3 cubic yards	Not applicable	Not applicable	Curbs at doorways	Not applicable - no free liquids	Not available.	Interim Status
35	Mobile Equipment Wash Station	Tank	To be closed	NA	NA	2' x 20'8" x 2'; 4' x 4' x 4'	Stainless steel double lined sump	858 gallons	Not applicable	Not applicable	Not applicable	Not applicable	Not applicable	To be closed.
36	Reverb Furnace	Miscellaneous Unit; Treatment	Lead; lead alloys	132, 181, 721, 722, 723, 724, 791, 792, 171, 172	D002, D004, D005, D006, D007, D008, D010, K069	19'-0" Width x 39'-5" Length x 12'-9" Height	Refractory brick, exterior support frame	43.37 cubic yards	450 tons per day	Metallurgical reduction	Operational procedures	Smelter Building	Willie T. Grant, 9/10/80	Interim Status
37	Blast Furnace	Miscellaneous Unit; Treatment	Lead; lead alloys	132, 181, 721, 722, 723, 724, 791, 792, 171, 172	D002, D004, D005, D006, D007, D008, D010, K069	6'-8" Width x 8'-7" Length x 23'-3" Height	Water jacketed steel	3.94 cubic yards	250 tons per day	Metallurgical reduction	Operational procedures	Smelter Building	Willie T. Grant, 9/10/80	Interim Status
38	WWTP Area Sump	Tank	**Tank decontaminated and demolished.**	NA	NA	Not applicable	Not applicable	Not applicable	Not applicable	Not applicable	Not applicable	Not applicable	Not applicable	Preliminary Closure Report submitted. Supplemental Report will be submitted following sampling.
39	WWTP Filter Press Sump	Tank	**Tank decontaminated and demolished.**	NA	NA	Not applicable	Not applicable	Not applicable	Not applicable	Not applicable	Not applicable	Not applicable	Not applicable	Preliminary Closure Report submitted. Supplemental Report will be submitted following sampling.
40	RMPS Hammer Mill	Miscellaneous Unit; Treatment	Spent lead-acid batteries	132, 181, 721, 722, 723, 724, 791, 792, 171, 172	D002, D004, D005, D006, D007, D008, D010, K069	89.5" Width x 66.5" Depth x 39" Height	Stainless steel	Not applicable	53 tons per day	Crushing	Not applicable	Raw Material Preparation System Building Minimum capacity: 24,079 gallons	Not applicable	Interim Status
41	Waste Acid Circulation Tank	Tank	Sodium sulfate solution; dilute sulfuric acid	132, 181, 721, 722, 723, 724, 791, 792, 171, 172	D002, D004, D005, D006, D007, D008, D010, K069	4' Width x 4' Depth x 3'6" to 6' Height; 0.5' Freeboard	Stainless steel	419 gallons	1,440 gallons per day	Separation	None	Raw Material Preparation System Building Minimum capacity: 24,079 gallons	See tank certification.	Interim Status
42	East Elutriation Column	Miscellaneous Unit; Treatment	Dilute sulfuric acid; plastic; rubber; lead metal	132, 181, 721, 722, 723, 724, 791, 792, 171, 172	D002, D004, D005, D006, D007, D008, D010, K069	21.2" Diameter x 68.5" Length; Taper to 26.5@ Diameter x 18" Length; 26.5" Diameter x 25.5" Length	Stainless steel	Not applicable	310,000 gallons per day	Gravity separation	Not applicable	Raw Material Preparation System Building Minimum capacity: 24,079 gallons	Not applicable	Interim Status
43	West Elutriation Column	Miscellaneous Unit; Treatment	Dilute sulfuric acid; plastic; rubber; lead metal	132, 181, 721, 722, 723, 724, 791, 792, 171, 172	D002, D004, D005, D006, D007, D008, D010, K069	21.2" Diameter x 68.5" Length; Taper to 26.5@ Diameter x 18" Length; 26.5" Diameter x 25.5" Length	Stainless steel	Not applicable	310,000 gallons per day	Gravity separation	Not applicable	Raw Material Preparation System Building Minimum capacity: 24,079 gallons	Not applicable	Interim Status
44	WWTP Filter Press	Miscellaneous Unit; Treatment	Sodium sulfate solution; ferric hydroxide; wastewater sludge	132, 181, 721, 722, 723, 724, 791, 792, 171, 172	D002, D004, D005, D006, D007, D008, D010, K069	24'-1" Width x 6'-2" Depth x 5'-10" Height	Cast iron coated with acid-resistant paint	Not applicable	310,000 gallons per day	Dewatering	Not applicable	Raw Material Preparation System Building Minimum capacity: 24,079 gallons	Not applicable	Interim Status

Unit No	Unit Description	Activity Type	Content	Waste Codes		Tank/ Unit Size	Tank/Unit Material	Maximum Capacity	Treatment Rate	Treatment Type	Overfill Protection	Secondary Containment	Structural Certification	Permit Status
45	RMPS Filter Press Unit B	Miscellaneous Unit; Treatment	Lead carbonate paste: Lead oxide; lead sulfate; lead carbonate; sodium sulfate; sodium carbonate	132, 181, 721, 722, 723, 724, 791, 792, 171, 172	D002, D004, D005, D006, D007, D008, D010, K069	- 39' long x 6' 1" wide x 9' 10" high	Carbon steel coated with acid-resistant epoxy	Not applicable	310,000 gallons per day	Dewatering	Not applicable	Raw Material Preparation System Building Minimum Capacity; 24,079 gallons	Not applicable	Interim Status
46	Pump Sump	Tank	Storm water; facility wash-down water	132, 181, 721, 722, 723, 724, 791, 792, 171, 172	D002, D004, D005, D006, D007, D008, D010, K069	5' wide x 9' long x 5'3" high	Double-walled stainless steel	3,850 gallons	Not applicable	Not applicable	None	Double-walled sump	See tank certification	Interim Status
47	Settling Tank No. 1	Tank	Storm water; facility wash-down water	132, 181, 721, 722, 723, 724, 791, 792, 171, 172	D002, D004, D005, D006, D007, D008, D010, K069	10'-0" Diameter x 15'-5" Height; 6" freeboard	Polyethylene	9,000 gallons	Not applicable	Not applicable	Overflow pipe	Drop-out System Area minimum capacity: 9,000 gallons.	See tank certification.	Interim Status
48	Settling Tank No. 2	Tank	Storm water; facility wash-down water	132, 181, 721, 722, 723, 724, 791, 792, 171, 172	D002, D004, D005, D006, D007, D008, D010, K069	10'-0" Diameter x 15'-5" Height; 6" freeboard	Polyethylene	9,000 gallons	Not applicable	Not applicable	Overflow pipe	Drop-out System Area minimum capacity: 9000 gallons.	See tank certification	Interim Status
49	Settling Tank No. 3	Tank	Storm water; facility wash-down water	132, 181, 721, 722, 723, 724, 791, 792, 171, 172	D002, D004, D005, D006, D007, D008, D010, K069	10'-0" Diameter x 15'-5" Height; 6" freeboard	Polyethylene	9,000 gallons	Not applicable	Not applicable	Overflow pipe	Drop-out System Area minimum capacity: 9000 gallons.	See tank certification	Interim Status
50	Settling Tank No. 4	Tank	Storm water; facility wash-down water	132, 181, 721, 722, 723, 724, 791, 792, 171, 172	D002, D004, D005, D006, D007, D008, D010, K069	10'-0" Diameter x 15'-5" Height; 6" freeboard	Polyethylene	9,000 gallons	Not applicable	Not applicable	Overflow pipe	Drop-out System Area minimum capacity: 9,000gallons.	See tank certification	Interim Status
51	Truck Wash Sump	Tank	Wash water with varying lead concentrations	132, 181, 721, 722, 723, 724, 791, 792, 171, 172	D002, D004, D005, D006, D007, D008, D010, K069	2' x 4'6" x 2.5' deep	Epoxy coated concrete sump	150 gallons	Not applicable	Not applicable	None	Not applicable - sump	See tank certification	Interim Status
52	Equalization Tank 1	Tank	Sodium sulfate solution; storm water; gray water; wash-down water; sand filter backwash	132, 181, 721, 722, 723, 724, 791, 792, 171, 172	D002, D004, D005, D006, D007, D008, D010, K069	21'-6.5" Diameter x 24'-1.5" height; 18" freeboard	Stainless steel	65,000 gallons	Not applicable	Not applicable	Overflow pipe	Wastewater Treatment Plant System Area Minimum capacity: 71,164 gallons.	See tank certification	Interim Status
53	Equalization Tank 2	Tank	Sodium sulfate solution; storm water; gray water; wash-down water; sand filter backwash	132, 181, 721, 722, 723, 724, 791, 792, 171, 172	D002, D004, D005, D006, D007, D008, D010, K069	21'-6.5" Diameter x 24'-2.125" height; 18" freeboard	Steel	64,550 gallons	Not applicable	Not applicable	Overflow pipe	Wastewater Treatment Plant System Area Minimum capacity: 71,164 gallons.	See tank certification.	Interim Status
54	Sludge Holding Tank	Tank	Clarified Sludge	132, 181, 721, 722, 723, 724, 791, 792, 171, 172	D002, D004, D005, D006, D007, D008, D010, K069	10' Diameter x 16'4" height	Polyethylene	7,000 gallons	Not applicable	Not applicable	Discharge pipe	Wastewater Treatment Plant System Area Minimum capacity: 71,164 gallons.	See tank certification	Interim Status
55	Flocculation Tank	Tank	Wastewater; Sodium sulfate solution; polymers	132, 181, 721, 722, 723, 724, 791, 792, 171, 172	D002, D004, D005, D006, D007, D008, D010, K069	7'0.38" width x 9'6.56"' length x 8'3.5" height; 1' freeboard	Stainless steel	2,500 gallons	310,000 gallons per day	Flocculation	Discharge pipe	Wastewater Treatment Plant System Area Minimum capacity: 71,164 gallons.	See tank certification	Interim Status

Unit No	Unit Description	Activity Type	Content	Waste Codes		Tank/ Unit Size	Tank/Unit Material	Maximum Capacity	Treatment Rate	Treatment Type	Overfill Protection	Secondary Containment	Structural Certification	Permit Status
56	WWTP Clarifier	Tank	Wastewater; Sodium sulfate solution	132, 181, 721, 722, 723, 724, 791, 792, 171, 172	D002, D004, D005, D006, D007, D008, D010, K069	20'1.5" width x 9'-5.5" length x 11'-6" height; 9" freeboard	Stainless steel	8,000 gallons	310,000 gallons per day	Clarification (separation)	Discharge pipe	Wastewater Treatment Plant System Area Minimum capacity: 71,164 gallons.	See tank certification	Interim Status
57	Reaction Tank 1	Tank	Wastewater; Sodium sulfate solution; ferric hydroxide	132, 181, 721, 722, 723, 724, 791, 792, 171, 172	D002, D004, D005, D006, D007, D008, D010, K069	12' diameter x 15' height; 4.5" freeboard	Polyethylene	12,300 gallons	310,000 gallons per day	pH adjustment	Discharge pipe	Wastewater Treatment Plant System Area Minimum capacity: 71,164 gallons.	See tank certification.	Interim Status
58	Reaction Tank 2	Tank	Wastewater; Sodium sulfate solution, ferric hydroxide	132, 181, 721, 722, 723, 724, 791, 792, 171, 172	D002, D004, D005, D006, D007, D008, D010, K069	12' diameter x 15' height; 5.5" freeboard	Polyethylene	12,300 gallons	310,000 gallons per day	pH adjustment	Discharge pipe	Wastewater Treatment Plant System Area Minimum capacity: 71,164 gallons.	See tank certification	Interim Status
59	Reaction Tank 3	Tank	Wastewater; Sodium sulfate solution, ferric hydroxide	132, 181, 721, 722, 723, 724, 791, 792, 171, 172	D002, D004, D005, D006, D007, D008, D010, K069	12' diameter x 15' height; 6" freeboard	Polyethylene	12,300 gallons	310,000 gallons per day	pH adjustment	Discharge pipe	Wastewater Treatment Plant System Area Minimum capacity71,164 gallons.	See tank certification	Interim Status
60	Reaction Tank 4	Tank	Wastewater; Sodium sulfate solution, ferric hydroxide	132, 181, 721, 722, 723, 724, 791, 792, 171, 172	D002, D004, D005, D006, D007, D008, D010, K069	12' diameter x 15' height; 9" freeboard	Polyethylene	12,300 gallons	310,000 gallons per day	pH adjustment	Discharge pipe	Wastewater Treatment Plant System Area Minimum capacity: 71,164 gallons.	See tank certification	Interim Status
61	Reaction Tank 5	Tank	Wastewater; Sodium sulfate solution, ferric hydroxide	132, 181, 721, 722, 723, 724, 791, 792, 171, 172	D002, D004, D005, D006, D007, D008, D010, K069	12' diameter x 15' height; 12" freeboard	Polyethylene	12,300 gallons	310,000 gallons per day	pH adjustment	Discharge pipe	Wastewater Treatment Plant System Area Minimum capacity: 71,164 gallons.	See tank certification	Interim Status
62	WWTP Sump	Tank	Wash-down water; stormwater; sodium sulfate solution	132, 181, 721, 722, 723, 724, 791, 792, 171, 172	D002, D004, D005, D006, D007, D008, D010, K069	4' width x 8'6" length x 2'10" height; 6" freeboard	Double-walled stainless steel	270 gallons	Not applicable	Not applicable	None	Not applicable - double-walled sump	See tank certification	Interim Status
63	WWTP Acid Storage Tank	Tank	24% sulfuric acid solution	132, 181, 721, 722, 723, 724, 791, 792, 171, 172	D002, D004, D005, D006, D007, D008, D010, K069	12' diameter x 16' 7 ¾" height; no freeboard	Polyethylene	12,150 gallons	Not applicable	Not applicable	None	Wastewater Treatment Plant Replacement Area Minimum capacity: 71,164 gallons.	See tank certification.	Interim Status
64	North Acid Storage Tank 2	Tank	**Tank decontaminated and demolished.**	NA	NA	Not applicable	Not applicable	Not applicable	Not applicable	Not applicable	Not applicable	Not applicable	Not applicable	Preliminary Closure Report submitted. Supplemental Report will be submitted following sampling.
65	North Acid Storage Tank	Tank	**Tank decontaminated and demolished.**	NA	NA	Not applicable	Not applicable	Not applicable	Not applicable	Not applicable	Not applicable	Not applicable	Not applicable	Preliminary Closure Report submitted. Supplemental Report will be submitted following sampling.
66	Acid Overflow Tank A	Tank	24% sulfuric acid solution	132, 181, 721, 722, 723, 724, 791, 792, 171, 172	D002, D004, D005, D006, D007, D008, D010, K069	7' 11" diameter x 8' 8.5" height; 4" freeboard	Polyethylene	2,300 gallons	Not applicable	Not applicable	Overflow pipe	Raw Material Preparation System Building Minimum Capacity: 24,079 gallons.	See tank certification.	Interim Status
67	Acid Overflow Tank B	Tank	24% sulfuric acid solution	132, 181, 721, 722, 723, 724, 791, 792, 171, 172	D002, D004, D005, D006, D007, D008, D010, K069	8'-1.5" diameter x 9'-1.0" height; 4" freeboard	Polyethylene	2,585 gallons	Polyethylene	Not applicable	Overflow pipe	Desulfurization Area Minimum capacity: 41,875 gallons.	See tank certification	Interim Status

Unit No	Unit Description	Activity Type	Content	Waste Codes		Tank/ Unit Size	Tank/Unit Material	Maximum Capacity	Treatment Rate	Treatment Type	Overfill Protection	Secondary Containment	Structural Certification	Permit Status
68	Clarifying Acid Filter Press	Miscellaneous Unit; Treatment	24% sulfuric acid solution	132, 181, 721, 722, 723, 724, 791, 792, 171, 172	D002, D004, D005, D006, D007, D008, D010, K069	6' Wide x 31" Depth x 31" Height	Cast iron coated with acid-resistant paint.	Not Applicable	144,000 gallons per day	Not applicable	Level monitor	Raw Material Preparation System Building. Minimum capacity: 24,079 gallons	Not applicable	Interim Status
69	Rotary Kiln	Miscellaneous Unit; Treatment	Furnace Feed	132, 181, 721, 722, 723, 724, 791, 792, 171, 172	D002, D004, D005, D006, D007, D008, D010, K069	6' diameter x 35 ft length	Grade 70 steel	N/A	720 tons/day	N/A	N/A	Not applicable, enclosed unit.	Not applicable	Interim Status
70	Oscillating Pan Feeder	Miscellaneous Unit; Conveying	Spent lead-acid batteries; lead-bearing plant scrap	132, 181, 721, 722, 723, 724, 791, 792, 171, 172	D002, D004, D005, D006, D007, D008, D010, K069	22' long x 21' wide x 10' deep	Stainless steel	50 tons	N/A	N/A	N/A	Raw Material Preparation System Building Minimum capacity: 24,079 gallons.	Not applicable	Interim Status
71	#1 Sand Filter	Tank	Wastewater; Sodium sulfate solution	132, 181, 721, 722, 723, 724, 791, 792, 171, 172	D002, D004, D005, D006, D007, D008, D010, K069	4' diameter x 5' height	Stainless steel	211 gallons	600 gpm	Filtration	N/A Closed tank	Wastewater Treatment Plant Replacement Area. Minimum capacity: 71,164 gallons.	See tank certification	Interim Status
72	#2 Sand Filter	Tank	Wastewater; Sodium sulfate solution	132, 181, 721, 722, 723, 724, 791, 792, 171, 172	D002, D004, D005, D006, D007, D008, D010, K069	4' diameter x 5' height	Stainless steel	211 gallons	600 gpm	Filtration	N/A Closed tank	Wastewater Treatment Plant Replacement Area. Minimum capacity: 71,164 gallons.	See tank certification	Interim Status
73	#3 Sand Filter	Tank	Wastewater; Sodium sulfate solution	132, 181, 721, 722, 723, 724, 791, 792, 171, 172	D002, D004, D005, D006, D007, D008, D010, K069	4' diameter x 5' height	Stainless steel	211 gallons	600 gpm	Filtration	N/A Closed tank	Wastewater Treatment Plant Replacement Area. Minimum capacity: 71,164 gallons.	See tank certification	Interim Status
74	#4 Sand Filter	Tank	Wastewater; Sodium sulfate solution	132, 181, 721, 722, 723, 724, 791, 792, 171, 172	D002, D004, D005, D006, D007, D008, D010, K069	4' diameter x 5' height	Stainless steel	211 gallons	600 gpm	Filtration	N/A Closed tank	Wastewater Treatment Plant Replacement Area. Minimum capacity: 71,164 gallons.	See tank certification	Interim Status
75	#5 Sand Filter	Tank	Wastewater; Sodium sulfate solution	132, 181, 721, 722, 723, 724, 791, 792, 171, 172	D002, D004, D005, D006, D007, D008, D010, K069	4' diameter x 5' height	Stainless steel	211 gallons	600 gpm	Filtration	N/A Closed tank	Wastewater Treatment Plant Replacement Area. Minimum capacity: 71,164 gallons.	See tank certification	Interim Status
76	WWTP Recycled Acid Tank	Tank	24% sulfuric acid solution	132, 181, 721, 722, 723, 724, 791, 792, 171, 172	D002, D004, D005, D006, D007, D008, D010, K069	10' diameter x 14'3" height	Polyethylene	8,000 gallons	310,000 gallons per day	Not Applicable	None	Wastewater Treatment Plant Replacement Area. Minimum capacity: 71,164 gallons.	See tank certification	Interim Status
77	Sand Filter Feed Tank	Tank	Wastewater; Sodium sulfate solution	132, 181, 721, 722, 723, 724, 791, 792, 171, 172	D002, D004, D005, D006, D007, D008, D010, K069	10' diameter by 10'8" height	Polyethylene	6,000 gallon	310,000 gallons per day	Not applicable	None	Wastewater Treatment Plant Replacement Area. Minimum capacity: 71,164 gallons.	See tank certification	Interim Status
78	Stormwater Surface Impoundment	Surface Impoundment	Stormwater	132, 181, 721, 722, 723, 724, 791, 792, 171, 172	D002, D004, D005, D006, D007, D008, D010, K069	280 feet by 160 feet; 150 feet by 50 feet	HDPE, concrete	2,348,006 gallons	Not applicable	Not applicable	N/A	Leak detection	Application pending	Application pending
79	Surge Tank (Proposed)	Tank	Wastewater, iron oxide, lead carbonate	132, 181, 721, 722, 723, 724, 791, 792, 171, 172	D002, D004, D005, D006, D007, D008, D010, K069	9 ft diameter by 11 ft 11 inches height	HDPE	4,925 gallons	250,000 gallons per day	Not applicable	Overflow Pipe	Raw Material Preparation System Building. Minimum capacity: 24,079 gallons	Tank certification to be prepared following installation.	Application Pending

Unit No	Unit Description	Activity Type	Content	Waste Codes		Tank/ Unit Size	Tank/Unit Material	Maximum Capacity	Treatment Rate	Treatment Type	Overfill Protection	Secondary Containment	Structural Certification	Permit Status
81	Plastic Centrifuge #2 (Proposed)	Miscellaneous Unit	Plastic; dilute sulfuric acid	132, 181, 721, 722, 723, 724, 791, 792, 171, 172	D002, D004, D005, D006, D007, D008, D010, K069	8 ft 4 inch by 6 ft 4 inch by 11 ft 3 inch height	304 stainless steel	Not applicable	6,000 to 7,000 lb/hr	Separation	Not applicable	Not applicable	Not applicable	Application Pending

Note: Unit numbers are intentionally non-sequential.

FIGURES

HAZARDOUS WASTE MANAGEMENT UNITS BY PROCESS

Container Storage

- 1 Central Container Storage Building
- 2 West Container Storage Building #1
- 3 West Container Storage Building #2

RMPS

- 5 Battery Dump Bin Sump
- 6 RMPS Floor Sump
- 7 North Mud Tank
- 8 Center Mud Tank
- 9 South Mud Tank
- 10 South Acid Storage Tank
- 12 Paste Thickening Unit (Santa Maria)
- 13 Sink/Float Separator
- 14 Recycle Tank
- 40 RMPS Hammer Mill
- 41 Waste Acid Circulation Tank
- 42 East Elutriation Column
- 43 West Elutriation Column
- 45 RMPS Filter Press Unit B
- 66 Acid Overflow Tank A
- 67 Acid Overflow Tank B
- 68 Clarifying Acid Filter Press
- 70 Oscillating Pan Feeder
- 79 Surge Tank (Proposed)
- 81 Centrifuge No. 2 (Proposed)

Oxidation Tanks

- 24 North Oxidation Tank
- 25 South Oxidation Tank

Flue Dust Slurry Tanks

- 31 North Flue Dust Slurry Tank
- 32 South Flue Dust Slurry Tank

Miscellaneous

- 35 Mobile Equipment Wash Station

WWTP

- 44 WWTP Filter Press
- 52 Equalization Tank 1
- 53 Equalization Tank 2
- 54 Sludge Holding Tank
- 55 Flocculation Tank
- 56 WWTP Clarifier
- 57 Reaction Tank 1
- 58 Reaction Tank 2
- 59 Reaction Tank 3
- 60 Reaction Tank 4
- 61 Reaction Tank 5
- 62 WWTP Sump
- 63 WWTP Acid Storage Tank
- 71 #1 Sand Filter
- 72 #2 Sand Filter
- 73 #3 Sand Filter
- 74 #4 Sand Filter
- 75 #5 Sand filter
- 76 WWTP Recycled Acid Tank
- 77 Sand Filter Feed Tank

Drop Out System/Surface Impoundment

- 46 Pump Sump
- 47 Settling Tank No. 1
- 48 Settling Tank No. 2
- 49 Settling Tank No. 3
- 50 Settling Tank No. 4
- 78 Stormwater Surface Impoundment

Furnaces

- 36 Reverb Furnace
- 37 Blast Furnace
- 69 Rotary Kiln

Containment Building

- 33 Reverb Furnace Feed Room
- 34 Blast Furnace Feed Room
- 51 Truck Wash Sump

BUILDINGS AND AREAS

- Container Storage Building
- RMPS Building
- Oxidation Tank Area
- Drop Out System Area
- Containment Building
- Wastewater Treatment Area
- Smelter Building
- Baghouse Building
- Desulfurization Area / Mud Tank Building

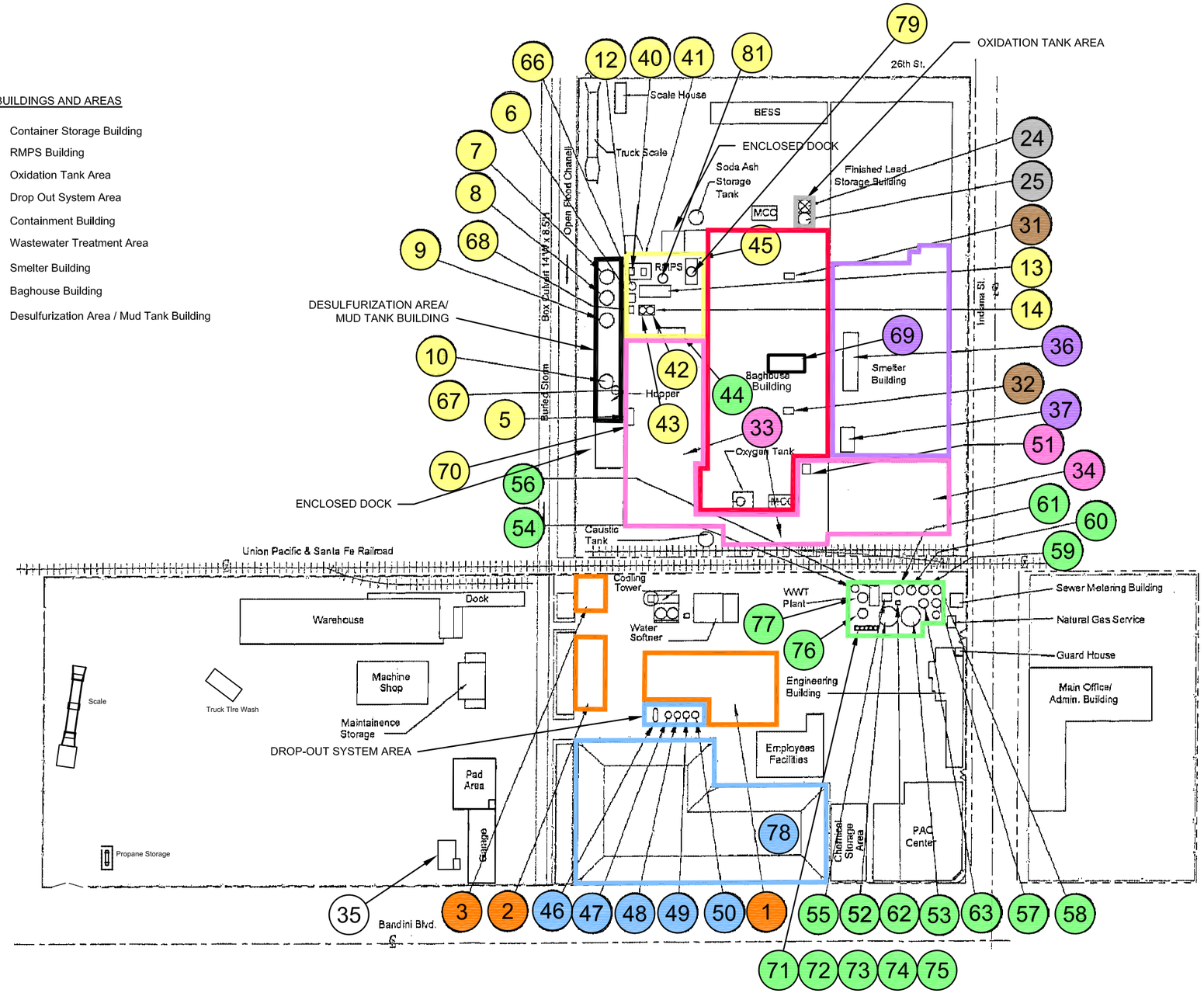

NOTE:

1. ADAPTED FROM LAKE ENGINEERING FIGURE 5.2 FROM PART B APPLICATION, MAY 2002.
2. SECONDARY CONTAINMENT AREAS ARE THE BUILDING BOUNDARIES.
3. 'UNIT PROCESS' INDICATES THE PROCESS IN WHICH A UNIT IS USED, NOT ITS LOCATION.
4. UNIT SIZES AND LOCATIONS ARE APPROXIMATE
5. UNIT NUMBERS ARE INTENTIONALLY NON-SEQUENTIAL

ADVANCED GeoServices
Engineering for the Environment. Planning for People.™
1055 ANDREW DRIVE, SUITE A, WEST CHESTER PA, 19380
tel 610.840.9100 fax 610.840.9199 www.advancedgeoservices.com

FACILITY PLOT PLAN

Exide Technologies
Vernon, California

SCALE:	N.T.S.	Figure
PROJECT NUMBER:	2013-2993-01	5.1
DATE:		

F:\Projects\2013\20132993 - Exide Vernon Permitting Assistance\Cad\2013-2993-08\2013-2993-08-09.dwg

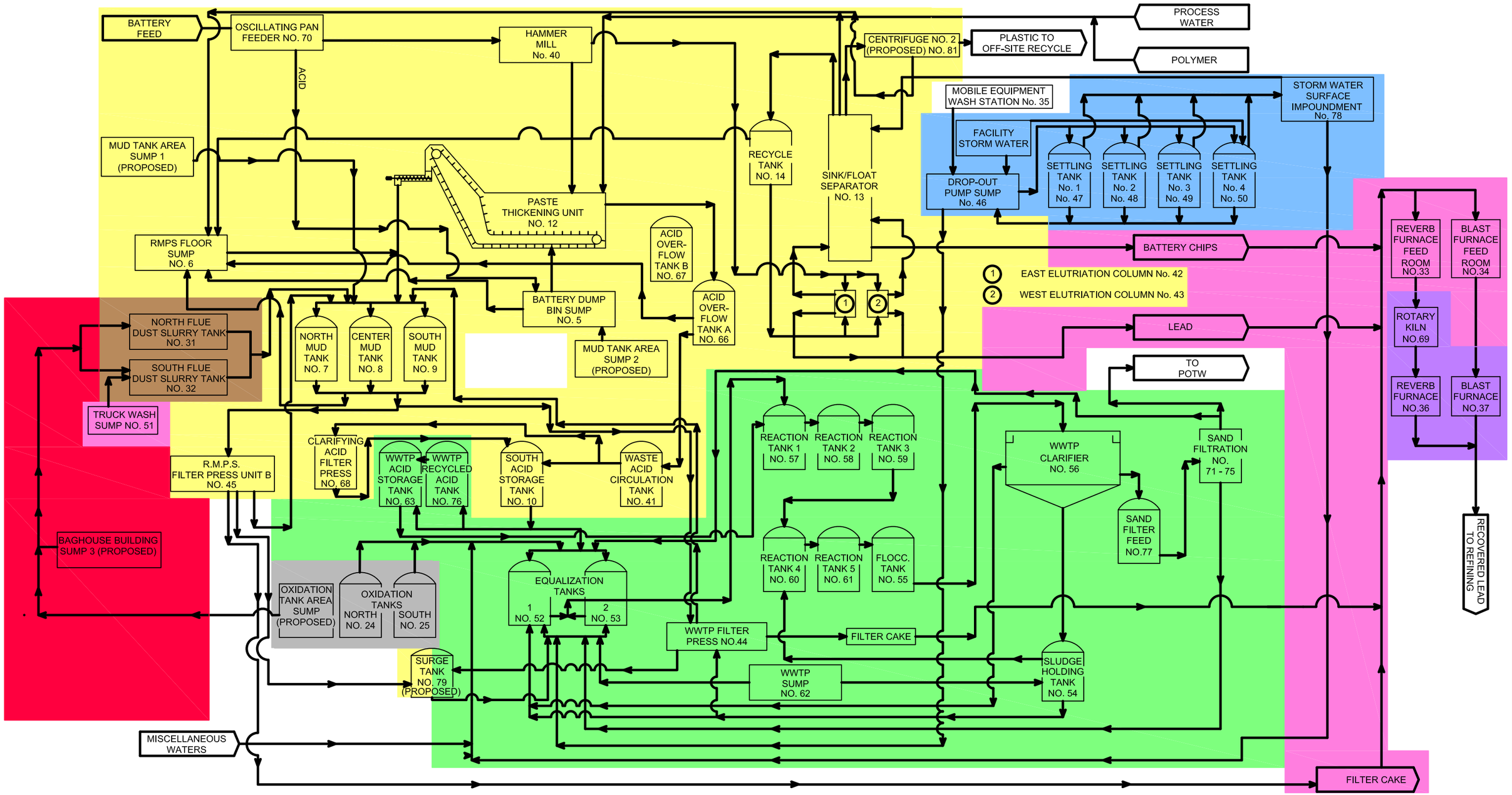

NOTE:

1. ADAPTED FROM LAKE ENGINEERING FIGURE 5.4 FROM PART B APPLICATION, MAY 2002.
2. COLOR REPRESENTS FACILITY PROCESS, NOT LOCATION.
3. UNIT NUMBERS ARE INTENTIONALLY NON-SEQUENTIAL.

FACILITY PROCESS

- RMPS
- FURNACES
- DROPOUT SYSTEM
- WWTP
- CONTAINMENT BUILDINGS
- BAGHOUSE BUILDING
- BAGHOUSE FLUE DUST
- SCRUBBER FEED

ADVANCED GeoServices
Engineering for the Environment. Planning for People.™
1055 ANDREW DRIVE, SUITE A, WEST CHESTER PA, 19380
tel 610.840.9100 fax 610.840.9199 www.advancedgeoservices.com

PROCESS FLOW DIAGRAM

Exide Technologies
Vernon, California

SCALE: N.T.S.	Figure 5.2
PROJECT NUMBER: 2013-2993-01	
DATE:	

F:\Projects\2013\20132993 - Exide Vernon Permitting Assistance\Cad\2013-2993-08\Flow Diagram.dwg

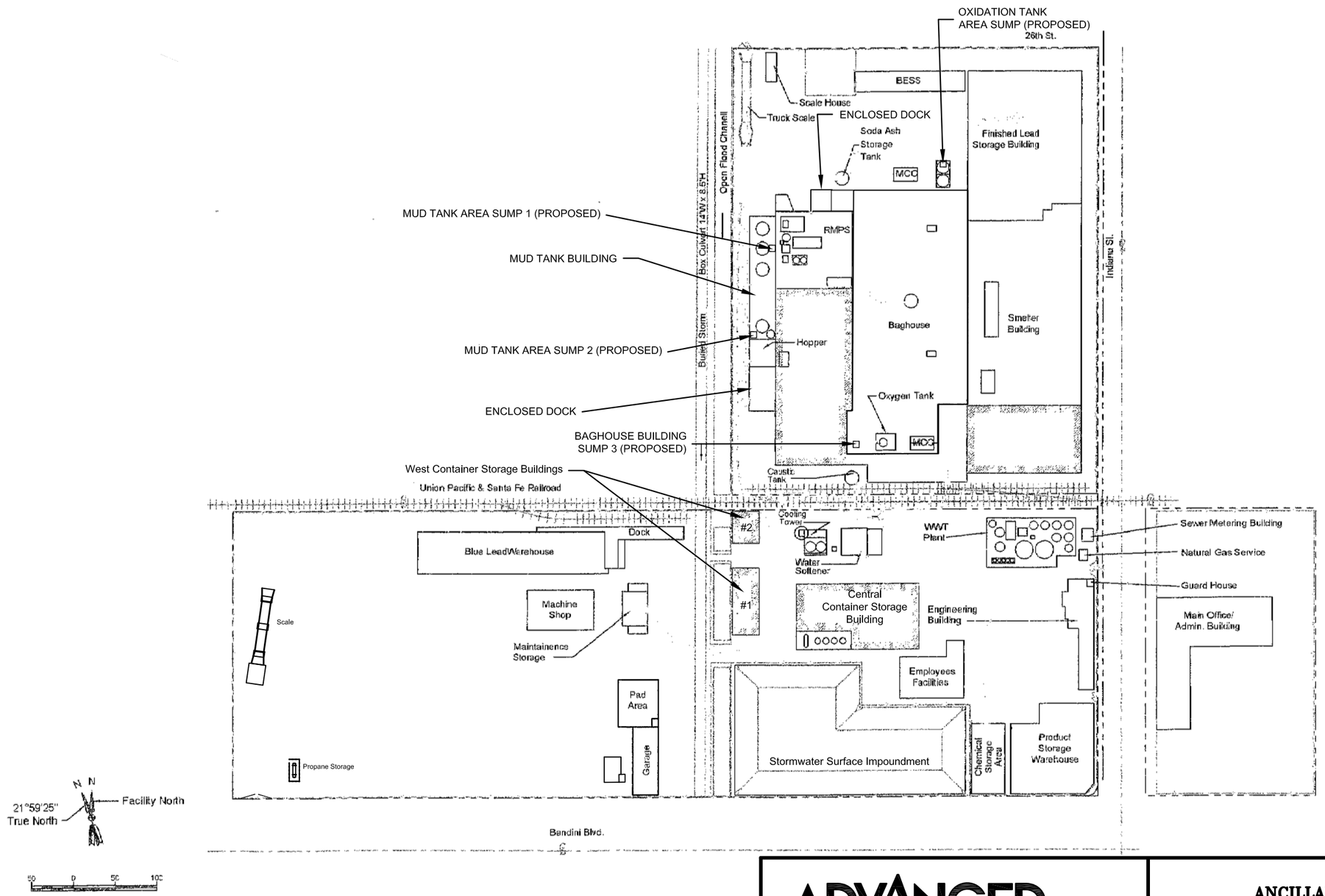

NOTE:

1. ADAPTED FROM LAKE ENGINEERING FIGURE 5.2 FROM PART B APPLICATION, MAY 2002.
4. SUMP SIZES AND LOCATIONS ARE APPROXIMATE

ADVANCED GeoServices

Engineering for the Environment. Planning for People.™

1055 ANDREW DRIVE, SUITE A, WEST CHESTER PA, 19380
tel 610.840.9100 fax 610.840.9199 www.advancedgeoservices.com

ANCILLARY SUMPS

Exide Technologies
Vernon, California

SCALE: N.T.S.	Figure
PROJECT NUMBER: 2013-2993-08	5.5
DATE:	

F:\Projects\2013\20132993 - Exide Vernon Permitting Assistance\Cad\2013-2993-08\2013-2993-08-09.dwg

SURGE TANK (UNIT 79)

NON-CONTROLLED COPY

INFORMATION SUBJECT TO CHANGE WITHOUT NOTICE

VERIFY REV LEVEL OF PAPER COPY WITH REV LEVEL ON PPC WEB SITE

NOZZLE SCHEDULE & ACCESSORIES						
SERVICE	MK	STOCK NO.	SIZE	FITTING	DEG	ELEV

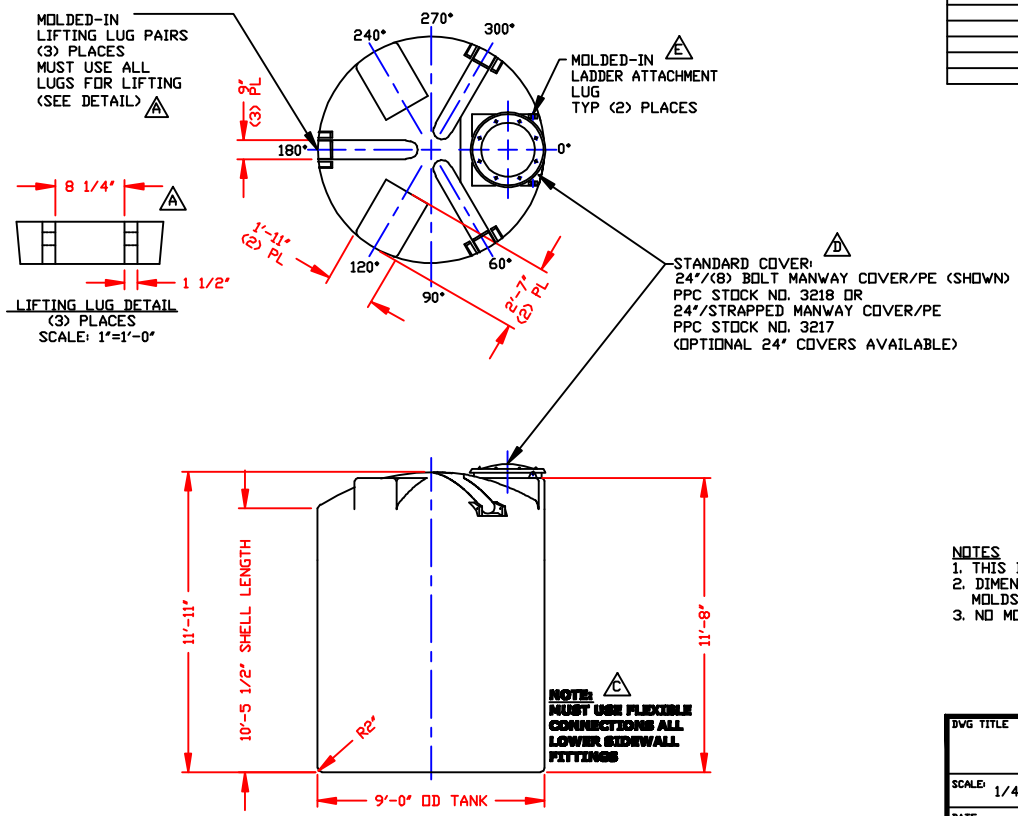

NOTES

1. THIS IS A COMPUTER GENERATED DWG. DO NOT REVISE BY HAND.
2. DIMENSIONS WILL VARY ±3% DUE TO VARIATIONS IN MULTIPLE MOLDS & CONDITIONS PREVALENT DURING MANUFACTURE & USAGE.
3. NO MOLDED IN GALLONAGE MARKERS THIS TANK.

CALCULATED CAPACITIES/ VOLUME IN U.S. GALLONS		
DESIGN CAP	DOME VOL	TOTAL VOL
4925	400	5325

CONFIDENTIAL PROPERTY OF POLY PROCESSING COMPANY NOT FOR REPRINT OR USE WITHOUT PERMISSION

DWG TITLE: 4925 GALLON UPRIGHT TANK

SCALE: 1/4"=1'-0"

DATE: 8/24/00

POLY PROCESSING COMPANY LLC

Western Region
P.O. Box 69
5823 South Ash Street
French Camp, CA 95231
(209) 948-2924
FAX (209) 948-9400

DR: MB WILKERSON

CK: J. BRANTLEY

SHEET	COMPUTER FILE	REV
1 OF 1	11004925	E

REV "E" ADDED LADDER ATTACHMENT LUGS BY:JB 10/2/09 CK:WM
REV "D" REVISED COVER BY:JB 11/24/03 CK:MBW
REV "C" ADDED FITTING NOTE BY:JB 2/12/03 CK:MBW
REV "B" REVISED STOCK NUMBER BY:JB 1/14/03 CK:WM
REV "A" ADDED LIFTING LUGS & DETAIL BY:JB 1/14/03 CK:WM

ADVANCED GeoServices
Engineering for the Environment. Planning for People.™
1055 Andrew Drive, Suite A - West Chester, PA 19380
(610) 840-9100 - Fax (610) 840-9199

PROJECT:	Exide Vernon 200296711		
SUBJECT:	Secondary Containment		
SHEET: 2 OF 5		DATE:	2/20/2014
BY:	KEZ		
CHK'D:	JWD		

RMPS Area

Available Volume in RMPS Area

Entire Floor Area	95 ft by	80 ft	=	7,600 ft^2	(Drawing)		

Displacement Area

Elect. Room	30	ft	x	16	ft	=	480	ft^2		480	ft^2
Control Room	21	ft	x	21	ft	=	441	ft^2		441	ft^2
Paste Thickening Unit (Unit 12)	10	ft	x	10	ft	=	100	ft^2		100	ft^2
Acid Overflow Tank A (Unit 66)	10	ft	x	32.0	ft	=	320	ft^2		320	ft^2
HammerMill Columns (Unit 40)	3	ft	x	3	ft	=	9	ft^2	4 columns	36	ft^2
	2	ft	x	2	ft	=	4	ft^2	4 columns	16	ft^2
Gala Footing	9	ft	x	8	ft	=	72	ft^2		72	ft^2
East Elutration Column (Unit 42)	27	in diameter					3.98	ft^2		3.98	ft^2
West Elutration Column (Unit 43)	27	in diameter					3.98	ft^2		3.98	ft^2
RMPS Filter Press (Unit 44)	24	ft	x	6	ft	=	144	ft^2		144	ft^2
RMPS Filter Press B (Unit 45)	26	ft	x	8	ft	=	208	ft^2		208	ft^2
Clarifying Acid Filter Press (Unit 68)	6	ft	x	3	ft	=	18	ft^2		18	ft^2
Waste Acid Tank (Unit 41)	5	ft	x	4	ft	=	20	ft^2		20	ft^2
Sink Float Separator columns (Unit 13)	0.67	ft	x	0.42	ft	=	0.28	ft^2	16 columns	4.44	ft^2
Recycle Tank columns (Unit 14)	8	in diameter					0.35	ft^2	8 columns	2.79	ft^2
Surge Tank (Unit 79)	108	in diameter					63.62	ft^2		63.62	ft^2
									Total Displacement	1,934	ft^2

Actual Floor Area

7,600 - 1,934 = 5,666 ft^2

Height of Containment Wall 0.53 ft

Containment Volume from Wall 5,666 ft^2 * 0.53 ft = 3,003 cf

Containment Volume from Floor Slope 0.5 x 5,666 sf x 4 in x 1/12 = 944 cf

Total Containment Volume 3,003 + 944 = 3,947 cf

Containment Volume in Gallons

3947 ft^3 * 7.48 gals/ft^3 = 29,527 gallons

Containment Volume

Paste Thickening Unit (Unit 12)	24,079
Sink Float Separator columns (Unit 13)	5,808
Recycle Tank (Unit 14)	3,635
Waste Acid Tank (Unit 41)	842
Acid Overflow Tank A (Unit 66)	2,585
Surge Tank (Unit 79)	4,925

Total Tank Volume
41,874 gallons

Total Required Containment Volume is 10% of the Total Tank Volume

41,874 * 10% = 4,187 gallons

10% of the total is less than the largest tank. Therefore, use the largest tank capacity for the required containment calculation.
Run on volume is not included as the area is under roof.

24,079 gallons required < 29,527 gallons available Containment volume is acceptable

LANE ENGINEERS, INC.

979 N. Blackstone St., Tulare, CA 93274
Phone: (559) 688-5263, Fax: (559) 688-8893
www.laneengineers.com

REGISTERED PROFESSIONAL ENGINEER
John Atilano
S 5176
4-14-14
STRUCTURAL
STATE OF CALIFORNIA

UPRIGHT TANK LATERAL RESTRAINTS

Customer: Exide Technologies
Installation Location: 2700 S. Indiana St.; Los Angeles, CA
Tank Manufacturer: Poly Processing Company

By: J. Atilano | April 14, 2014 | Job No.: 14105

INDEX

Governing Code: 2012 International Building Code
Wind Parameters: NA, Indoors
Seismic Parameters: Design Category E, Ss = 2.27g, S1 = 0.788g

CALCULATION DATA SHEET FOR:

4925 Gallon Vertical Tank 11004925

CALCULATION DESIGN BASIS:

Indoor Calculation Package ..... I-1 → I-4
Capacity Calculations for L6-10 Base Clip .....610-1 → 610-4

NOTES:
Poly Processing Tank's Lateral Restraint Notes dated 08-01-2013.

POLY PROCESSING COMPANY

CALCULATION DATA SHEET FOR VERTICAL TANK LATERAL RESTRAINT SYSTEMS
2012 INTERNATIONAL BUILDING CODE

Job No.: 14105

Customer: Exide Technologies — Tank No.: 11004925

City, State: Los Angeles, CA — Manuf. Site: CA

Mat'l Package: Carbon Steel/Galvanized — Date: 4/14/2014

TANK TYPE: VERTICAL

TANK DESCRIPTION (4925 GALLONS)

Design Cap.	=	4,925	Gal.
Diameter, Do	=	9.000	ft
Dome Height, H	=	11.917	ft
Shell Height	=	10.458	ft
Knuckle Radius	=	2.00	in
Insulation Thick.	=	0.00	in

WEIGHTS

Wempty	=	1,000	lbs.
Specific Gravity	=	1.00	
Contents	=	41,086	lbs.
Wfull	=	42,086	lbs.
# Cables	=	3	(3 through 12)
# Base Clips	=	6	(3,4, 6, 8,10,12)

WIND LOADING (Tank Empty for Max Overturning Force):

Wind Speed	=	0	mph
Pressure, w1	=	0.00	psf (0'<height<=15')
W	=	0	lbs.
Mot,wind	=	0	ft.-lbs.
Mr,empty	=	0	ft.-lbs.
Mr,empty/Mot,wind	=	0.000	NA, TANK IS INDOORS

FLOTATION LOADING (Tank Empty)

Submersion Depth	=	0.00	ft.
Buoyancy Force	=	0	lbs.
Mot,sub	=	0	ft.-lbs.

REGISTERED PROFESSIONAL ENGINEER
John Atilano
S 5176
4-14-14
STRUCTURAL
STATE OF CALIFORNIA

SEISMIC LOADING (ρ = 1.0, R = 2.5, T_L = 4 sec, Tank Full):

Risk Category	=	III	Ie = 1.25	R = 2.50	
Soil Site Class	=	D	Ss = 2.270	F_a = 1.00	
Design Category	=	E	S_1 = 0.788	F_v = 1.50	
V_b	=	26,925	(ASCE 15.7-4)		
$E_h = \rho Q_E / 1.4$	=	19,232	lbs. (ASD, ASCE Eq. 12.4-3 and IBC §1605.3.2)		
$E_v = 0.2S_{DS}D/1.4$	=	0.216	D (ASD, ASCE Eq. 12.4-4 and IBC §1605.3.2)		
Mot, eq	=	114,590	ft.-lbs.		
Mr, full	=	129,503	ft.-lbs. (0.9D - E/1.4, includes 0.2*S_{DS}*D factor for vertical EQ considerations)		
Mr,full/Mot,eq	=	1.1301			

BASE CLIP RESTRAINT FORCE (Allowable Stress Design):

TANK EMPTY + WIND	Max. Shear per Clip	0 lbs.
	Cable Tension	0 lbs.
TANK FULL + SEISMIC	Kinetic Friction Factor	0.27
	Max. Shear per Clip	4,543 lbs.

ANCHOR FORCE (ACI 318, APP. D)

Shear	0 lbs.
Cable Tension	0 lbs.
Tension	0 lbs.
Shear	8,984 lbs.
Tension	7,589 lbs.

BASE CLIP (Allowable Stress Design):

Allowable Force = 6,737 lbs -- O.K.

ANCHORAGE COMBINED STRESS RATIO:

C.S.R. = 0.925 <1.0 -- O.K.

CABLE TENSION (Allowable Stress Design):

Allowable Force = 3,500 lbs -- O.K.

CONCRETE BEARING STRESS:

Bearing Stress = 577 psi -- O.K.

Restraints	Anchors
6 - L6-10 BASE CLIPS (L6x4x1/2 x 10"), LLH CARBON STEEL/GALVANIZED	SEISMIC GOVERNS, ANCH. PER OPTION NO. 2 2 - 7/8" DIA. HAS THREADED RODS (TYPE 304/316) PER CLIP W/ HILTI HIT-HY 200 ADHESIVE AND 8" EMBED. INTO CONC. INSTALL PER ICC ESR-3187. SPECIAL INSP. IS REQUIRED. 18" MIN DIST. FROM TANK TO EDGE OF CONCRETE 10" MIN. CONCRETE THICKNESS

Not for permitting purposes unless stamped/signed by Professional Engineer

Indoor Calculation Package "I"

Manufacturer:

Poly Processing Company
8055 South Ash Street
French Camp, CA 95231
Ph: (209) 982-4904

Engineer:

Lane Engineers, Inc.
979 N. Blackstone St.
Tulare, CA 93274
Ph: (559) 688-5263

REGISTERED PROFESSIONAL ENGINEER
John Atilano
S 5176
11-13-13
STRUCTURAL
STATE OF CALIFORNIA

Design Criteria, Unless Noted Otherwise:

International Building Code (Published by I.C.C.)	2012 Edition
Site Soil Conditions	Class D
Risk Categorization	Risk Category III
Wind Loading	NA - Indoors
Seismic Loading	Design Category (per calculation data sheet)
Carbon Structural Steel	ASTM A36 or A572
Galvanized Structural Steel	ASTM A123
Stainless Structural Steel	ASTM A276

NOTES:

1. The purchaser shall be responsible for verifying local building code requirements and/or project specifications. Additional engineering assistance may be required to comply with local codes or individual project specifications.
2. Design of the tank foundation is beyond the scope of these calculations.
3. The following calculation package is the design basis for the polyethylene tank restraints. The actual size, diameter, height and restraints can be located on the *calculation data sheet* attached herewith.

LANE ENGINEERS, INC.

979 N. Blackstone ST. • Tulare, California 93274 • (559) 688-5263
www.laneengineers.com • FAX – (559) 688-8893

1. Load Combinations

"ASD" Alternative Load Combinations (IBC §1605.3.2)

- $D + E/1.4 = (1 + 0.2S_{DS}/1.4)D + V/1.4$
- $0.9D \pm E/1.4 = (0.9 - 0.2S_{DS}/1.4)D - V/1.4$

2. Wind Loading (ASCE 7-10, Chapter 29)

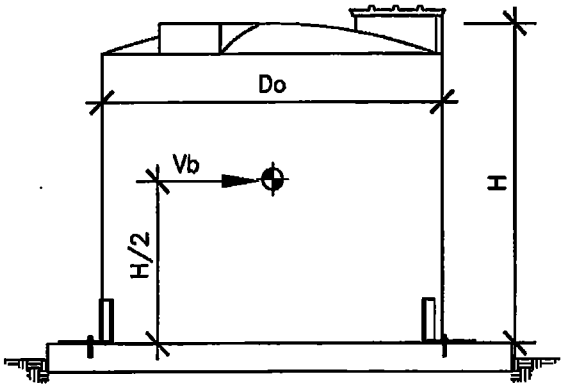

a) Not applicable – Indoor installation.

b) The tank must be located within a structure that has been designed to withstand applicable wind forces per the 2012 International Building Code.

3. Seismic Loading (ASCE 7-10, Chapter 15)

Tanks and Vessels (ASCE §15.7.6)
Risk Category III, Site Class D
Wfull = empty weight of tank + weight of tank contents

S_S = mapped MCE spectral response acceleration at short periods
S_1 = mapped MCE spectral response acceleration at a period of 1 sec
F_a = short-period site coefficient [ASCE Tbl 11.4-1]
F_V = long-period site coefficient (1-sec) [ASCE Tbl 11.4-2]
$S_{DS} = ⅔ * F_a * S_S$ [ASCE Eq. 11.4-3]
$S_{D1} = ⅔ * F_V * S_1$ [ASCE Eq. 11.4-4]
Design Category per ASCE Tbl 11.6-1 and Tbl 11.6-2

$T_L = 4$ sec [ASCE §15.7.6.1, Note D]
$Ts = S_{D1}/S_{DS}$ [ASCE §11.4.5]

$$Ti = \frac{1}{27.8}\frac{C_i * H}{\sqrt{t_u / D_O}}\left[\frac{\sqrt{\rho}}{\sqrt{E}}\right]$$ [API 650 Eq. E-1]

API used only to define period & loading with ASCE 7-10
E = 80,000 psi, $t_u = 0.25$"
ρ = S.G. * 62.4 pcf
C_i = varies per tank geometry [API 650 Fig. E-1]

$$Tc = 2\pi\sqrt{\frac{D_O}{3.68 * g * \tanh(3.68H / D_O)}}$$ [ASCE Eq. 15.7-12]

LANE ENGINEERS, INC.

979 N. Blackstone ST. • Tulare, California 93274 • (559) 688-5263
www.laneengineers.com • FAX – (559) 688-8893

$Vi = \frac{Sai * I_e * Wi}{R}$, [ASCE Eq. 15.7-5] for [$Ti \leq Ts \rightarrow Sai = S_{DS}$]

[$Ts < Ti \leq T_L \rightarrow Sai = S_{D1}/Ti$]
[$Ti > T_L \rightarrow Sai = S_{D1} * T_L/Ti^2$]

$Vc = \frac{Sac * I_e * Wc}{1.5}$, [ASCE Eq. 15.7-6] [$Tc \leq T_L \rightarrow Sac = 1.5 * S_{D1}/Tc < 1.5 * S_{DS}$]

[$Tc > T_L \rightarrow Sac = 1.5 * S_{D1} * T_L/Tc^2$]

For $Do/H \geq 1.33$: $Wi = \frac{\tanh(0.866\frac{D_o}{H})}{0.866\frac{D_o}{H}} Wfull$, [API 650 Eq. E-13]

For $Do/H < 1.33$: $Wi = (1.0 - 0.218\frac{D_o}{H}) Wfull$, [API 650 Eq. E-14]

$Wc = 0.230\frac{D_o}{H}\tanh(\frac{3.67H}{D_o}) Wfull$, [API 650 Eq. E-15]

$Vb = \sqrt{Vi^2 + Vc^2}$, [ASCE Eq. 15.7-4, Footnote "e"]

4. <u>Tank Stability</u>

Mot, eq = Vb/1.4 * H/2
Mr, full = $(0.9 - 0.2S_{DS}/1.4)$*Wfull * Do/2

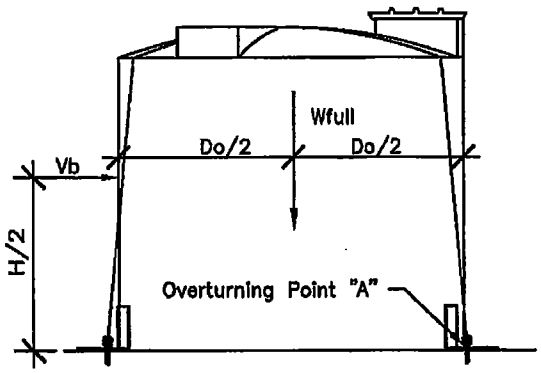

5. <u>Base Restraint</u>

Net lateral force resisted by base clips = P:
For seismic loading, net seismic force to base clips = Total seismic – Frictional resistance
Therefore, P = Vb – μ(k) * Wfull [μ(k) = "kinetic friction factor", determined by laboratory testing, "Kleinfelder", File No. 11-3163-01 (12-2-92), Ph. (510)484-1700)]

LANE ENGINEERS, INC.

979 N. Blackstone ST. • Tulare, California 93274 • (559) 688-5263
www.laneengineers.com • FAX – (559) 688-8893

PROJECT	2012 I.B.C. LATERAL RESTRAINT SYSTEM		SHEET	I-4	OF 4
CLIENT	POLY PROCESSING COMPANY		JOB NO.		
BY	JA	CHKD BY	DATE	August 1, 2013	

a) For 3-clip system:
$P = 2*Vc*\sin 30° = Vc$

b) For 4-clip system:
$Vc = P$

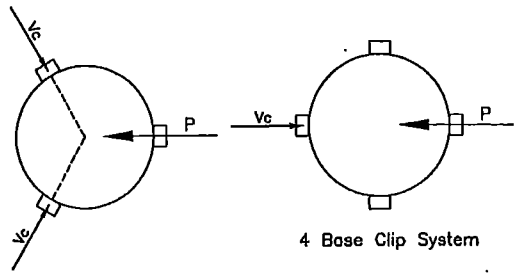

3 Base Clip System

4 Base Clip System

c) For 6-clip system:
$P = 2*Vc*\sin 60° = 1.7231*Vc$
$\rightarrow Vc = 0.57735*P$

d) For 8-clip system:
$P = Vc + [2*Vc*\sin 45°] = (1 + 1.4142)*Vc$
$\rightarrow Vc = 0.4142*P$

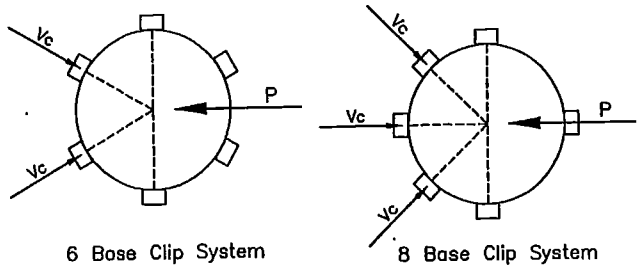

6 Base Clip System

8 Base Clip System

e) For 10-clip system:
$P = 2*Vc*\sin 36° + 2*Vc*\sin 72°$
$\rightarrow Vc = 0.3249*P$

f) For 12-clip system:
$P = Vc + [2*Vc*\sin 30°] + [2*Vc*\sin 60°]$
$= (1 + 1 + 1.732)*Vc = 3.732*Vc$
$\rightarrow Vc = 0.2679*P$

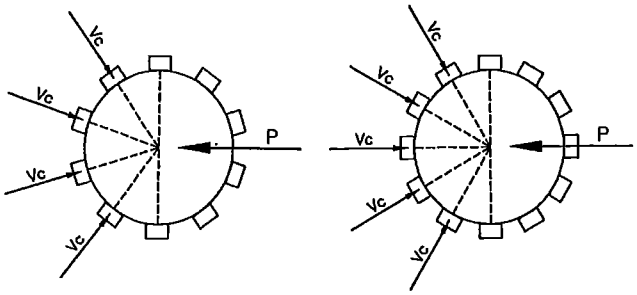

10 Base Clip System

12 Base Clip System

This calculation package is the design basis for the polyethylene tank restraints. The actual size, diameter, height and restraint calculations can be located on the *calculation data sheet.*

For anchor bolt analysis, refer to base clip and anchorage calculations.

Calculation Package "L610"
for
L6-10 Base Clips

REGISTERED PROFESSIONAL ENGINEER
John Atilano
S 5176
11-13-13
STRUCTURAL
STATE OF CALIFORNIA

Manufacturer:

Poly Processing Company
8055 South Ash Street
French Camp, CA 95231
Ph: (209) 982-4904

Engineer:

Lane Engineers, Inc.
979 N. Blackstone St.
Tulare, CA 93274
Ph: (559) 688-5263

Design Criteria, Unless Noted Otherwise:

International Building Code (Published by I.C.C.)	2009 Edition
Carbon Structural Steel	ASTM A36 or A572
Galvanized Structural Steel	ASTM A123
Stainless Structural Steel	ASTM A276

NOTES:

1. The purchaser shall be responsible for verifying local building code requirements and/or project specifications. Additional engineering assistance may be required to comply with local codes or individual project specifications.
2. Design of the tank foundation is beyond the scope of these calculations.
3. The following calculation package is the design basis for the polyethylene tank restraints. The actual size, diameter, height and restraints can be located on the *calculation data sheet* attached herewith.

PARAMETERS:

1. For outdoor installations, the base clips resist loads imposed by wind or seismic forces.
2. Cables will be attached to the base clips to resist tank overturning due to wind loading.
3. The combination of applicable forces will be transferred to the anchor bolts (2 at each base clip) by a combination of the sliding and overturning of the base clips.

LANE ENGINEERS, INC.

979 N. Blackstone ST. • Tulare, California 93274 • (559) 688-5263
www.laneengineers.com • FAX – (559) 688-8893

1. Base Clip L6-10 (L6x4x1/2 x 10" long):

Vertical leg = 4" Horizontal leg = 6" Length = 10"
Fy = 36,000 psi (carbon steel/galvanized) Fy = 30,000 psi (stainless steel)
Lateral load is applied at 2½" up from the concrete surface (dimension "h").
Anchor bolts are located at 2⅜" from the vertical face (dimension a = 3⅝").

$$Mn = Mp = Fy * Z = \frac{Fy * bd^2}{4} = \frac{36{,}000 * 0.5^2}{4} = 2{,}250 \text{ lbs-in/in}$$

$$Mn/\Omega = 2{,}250 / 1.67 = 1{,}347 \text{ lbs-in/in (Allowable Stress Design)}$$

$$Mc = \frac{Vc * (h-t)}{L} \rightarrow Vc = \frac{Mc * L}{(h-t)} = \frac{1{,}347 * 10}{(2.5-0.5)} = 6{,}735 \text{ lbs}$$

Therefore, L6x4x½ x 10" long can resist a 6,735 lb. (carbon steel/galvanized) or 5,610 lb (stainless steel) lateral load at ductile yielding.

2. Anchor Bolt Forces:

Ref: "*Design in Structural Steel*"; Lothers, 3rd edition.

$$n = Es/Ec = \frac{29x10^6}{57x10^3 * \sqrt{2500}} = 10.175$$

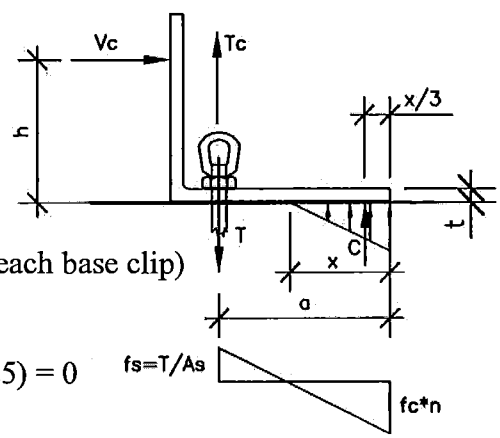

For L6-10 & 2 – 'HILTI' ⅞" dia. anchors:
B = 10", As = 2*0.6013 = 1.2026 in^2 (2 anchors at each base clip)

$Bx^2 + (2*n*As)x - (2*n*As*a) = 0$
$10x^2 + (2*10.18*1.2026)x - (2*10.18*1.2026*3.625) = 0$
$\rightarrow x = 1.997"$

$$T \text{ (total)} = \frac{Vc * 2.50}{3.625 - 1.997/3} = 0.8448*Vc$$

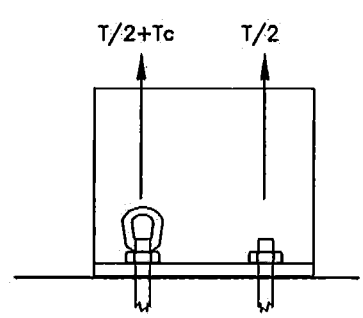

i) Maximum concrete bearing stress = C = (fc*B*x)/2 = T

$$fc = \frac{2*(T*1.5)}{B*x} = 0.1502*T = 0.1502*(0.8448*Vc)$$

ii) Anchor bolt tension = T/2 + Tc = 0.4224*Vc + Tc
(Conservatively, each anchor to withstand Tc force)

LANE ENGINEERS, INC.

979 N. Blackstone ST. • Tulare, California 93274 • (559) 688-5263
www.laneengineers.com • FAX – (559) 688-8893

3. Anchor Bolt Forces:

⅞" Diameter HAS threaded rod with 'HILTI' HIT-HY 200 adhesive.
Parameters: Forces per I.C.C. ESR-3187, ACI 318-11, Appendix D, 7" Anchor spacing, f'c = 2,500 psi, cracked (seismic)

Option 1: If Vc ≤ 0.2*Vb, per ACI 318-11 §D.3.3.5.1, the additional requirements of §D.3.3.5.3 need not apply where the applied earthquake shear force is a small fraction of the total factored shear force. See calculation sheet 610-4 for anchorage calculation.

Option 2: If Vc > 0.2*Vb, per ACI 318-11 §D.3.3.5.3(a), design anchor for maximum force that can be transmitted by a ductile metal attachment after considering the overstrength and strain hardening of the attachment.

Expected Yield Stress = RyFy = 1.5*36,000 psi = 54,000 psi (carbon steel/galvanized)
1.5*30,000 psi = 45,000 psi (stainless steel)

Design anchor for Vc = 1.5*6,735 lbs = 10,103 lbs (carbon steel/galvanized) or
1.5*5,610 lbs = 8,415 lbs (stainless steel).

Using same parameters as Option 3:
ϕVn = 14,199 lbs (Concrete breakout per Profis Anchor Program)
10,103 lbs < 14,199 lbs → Attachment will undergo ductile yielding per ACI 318 §D.3.3.5.3(a) prior to concrete edge failure!

Option 3: If Vc > 0.2*Vb, per ACI 318-11 §D.3.3.5.3(c), design anchor for maximum force obtained from design load combinations involving E, with E increased by Ω_o. See calculation sheet 610-5 for anchorage calculation.

L6-10 BASE CLIP:
L6x4x½ x 10" long, LLH. (Carbon steel, galvanized or Type 304/316 Stainless)

ANCHOR BOLTS:
2 – ⅞" dia. HAS threaded rod (Type 304/316 stainless) with 'HILTI' HIT-HY 200 adhesive. Install per ICC ESR-3187. Special inspection is required. Refer to calculation data sheet for embedment depth, edge distance & minimum concrete thickness.

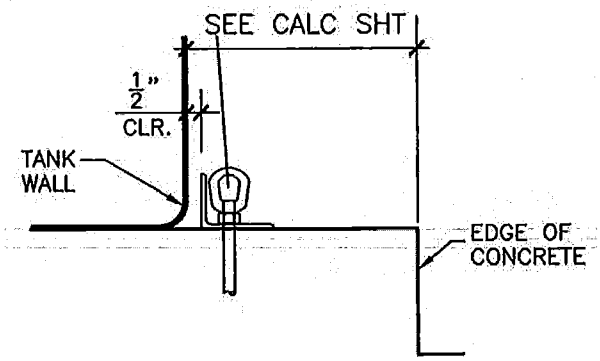

LANE ENGINEERS, INC.

979 N. Blackstone ST. • Tulare, California 93274 • (559) 688-5263
www.laneengineers.com • FAX – (559) 688-8893

PROJECT	2012 I.B.C. LATERAL RESTRAINT SYSTEM		SHEET	610-4	OF 5
CLIENT	POLY PROCESSING COMPANY		JOB NO.		
BY	JA	CHKD BY	DATE	August 1, 2013	

Option 1:

1 Input data

Anchor type and diameter:	**HIT-HY 200 + HAS-R 316 7/8**
Effective embedment depth:	$h_{ef,act}$ = 6.000 in. ($h_{ef,limit}$ = - in.)
Material:	ASTM F 593
Evaluation Service Report:	ESR-3187
Issued I Valid:	1/1/2014 | 3/1/2014
Proof:	design method ACI 318-11 / Chem
Stand-off installation:	e_b = 0.000 in. (no stand-off); t = 0.500 in.
Anchor plate:	l_x x l_y x t = 6.000 in. x 10.000 in. x 0.500 in.; (Recommended plate thickness: not calculated)
Profile:	no profile
Base material:	cracked concrete, 2500, f_c' = 2500 psi; h = 8.000 in., Temp. short/long: 32/32 °F
Installation:	hammer drilled hole, installation condition: dry
Reinforcement:	tension: condition B, shear: condition B; no supplemental splitting reinforcement present edge reinforcement: none or < No. 4 bar

Geometry [in.] & Loading [lb, in.lb]

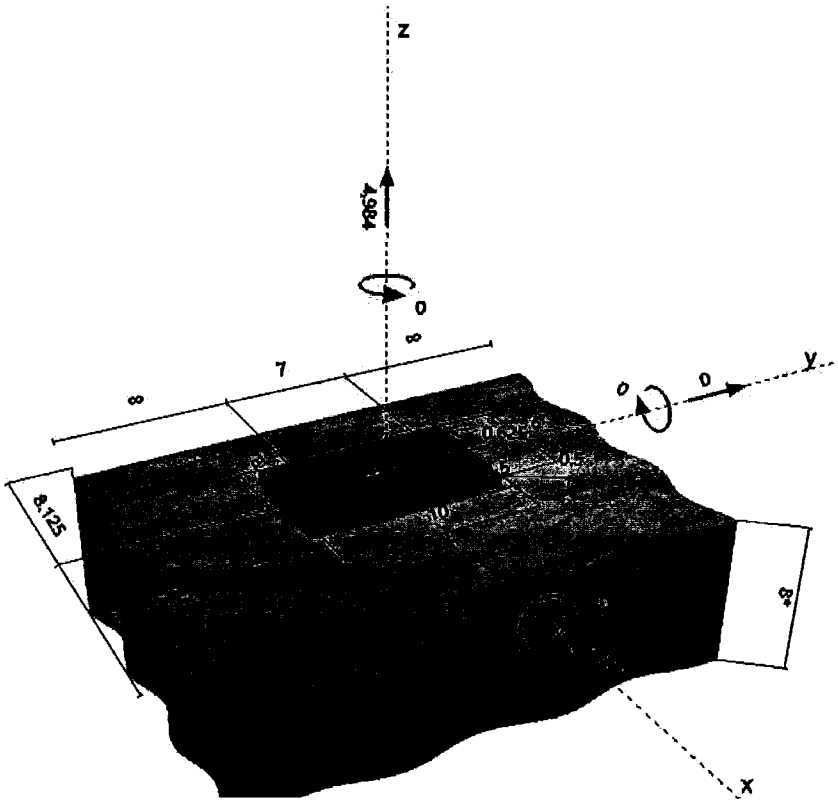

2 Proof I Utilization (Governing Cases)

Loading	Proof	Design values [lb] Load	Capacity	Utilization β_N / β_V [%]	Status
Tension	Bond Strength	4984	9882	51 / -	OK
Shear	Concrete edge failure in direction x-	5900	7608	- / 78	OK

Loading	β_N	β_V	ζ	Utilization $\beta_{N,V}$ [%]	Status
Combined tension and shear loads	0.504	0.775	5/3	98	OK

LANE ENGINEERS, INC.

979 N. Blackstone ST. • Tulare, California 93274 • (559) 688-5263
www.laneengineers.com • FAX – (559) 688-8893

PROJECT	2012 I.B.C. LATERAL RESTRAINT SYSTEM		SHEET	610-5	OF 5
CLIENT	POLY PROCESSING COMPANY		JOB NO.		
BY	JA	CHKD BY	DATE	August 1, 2013	

Option 3:

1 Input data

Anchor type and diameter:	HIT-HY 200 + HAS-R 316 7/8
Effective embedment depth:	$h_{ef,act}$ = 8.000 in. ($h_{ef,limit}$ = - in.)
Material:	ASTM F 593
Evaluation Service Report:	ESR-3187
Issued I Valid:	1/1/2014 | 3/1/2014
Proof:	design method ACI 318-11 / Chem
Stand-off installation:	e_b = 0.000 in. (no stand-off); t = 0.500 in.
Anchor plate:	l_x x l_y x t = 6.000 in. x 10.000 in. x 0.500 in.; (Recommended plate thickness: not calculated)
Profile:	no profile
Base material:	cracked concrete, 2500, f_c' = 2500 psi; h = 10.000 in., Temp. short/long: 32/32 °F
Installation:	hammer drilled hole, installation condition: dry
Reinforcement:	tension: condition B, shear: condition B; no supplemental splitting reinforcement present edge reinforcement: none or < No. 4 bar
Seismic loads (cat. C, D, E, or F)	Tension load: yes (D.3.3.4.3 (d)) Shear load: yes (D.3.3.5.3 (c))

Geometry [in.] & Loading [lb, in.lb]

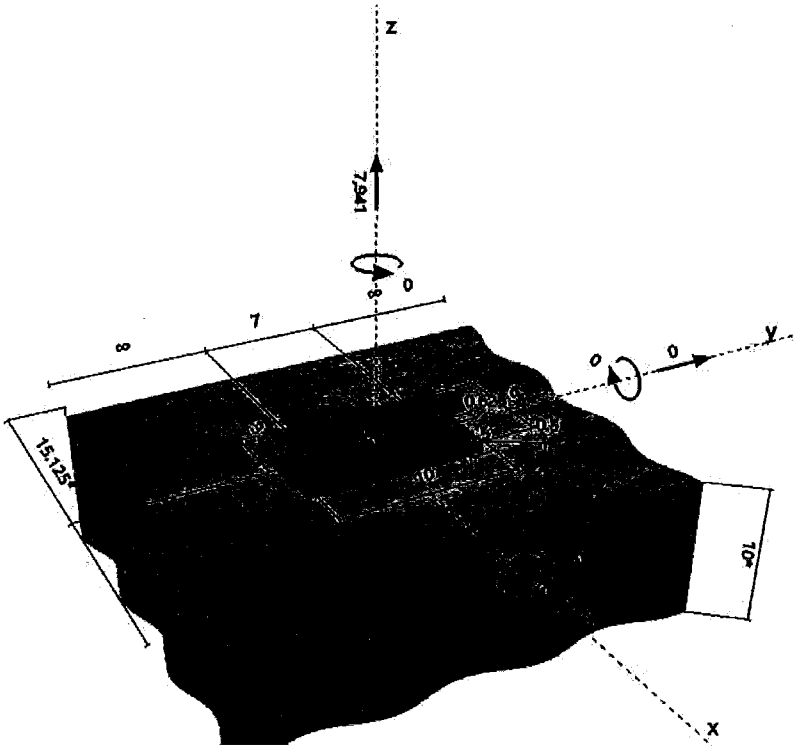

2 Proof I Utilization (Governing Cases)

Loading	Proof	Design values [lb] Load	Capacity	Utilization β_N / β_V [%]	Status
Tension	Concrete Breakout Strength	7941	12111	66 / -	OK
Shear	Concrete edge failure in direction x-	9400	14199	- / 67	OK

Loading	β_N	β_V	ζ	Utilization $\beta_{N,V}$ [%]	Status
Combined tension and shear loads	0.656	0.662	5/3	100	OK

LANE ENGINEERS, INC.

979 N. Blackstone ST. • Tulare, California 93274 • (559) 688-5263
www.laneengineers.com • FAX – (559) 688-8893

PROJECT	2012 I.B.C. LATERAL RESTRAINT SYSTEM		SHEET	N-1	OF 3
CLIENT	POLY PROCESSING COMPANY		JOB NO.		
BY	JA	CHKD BY	DATE	August 1, 2013	

POLY PROCESSING TANK'S LATERAL RESTRAINT NOTES

GENERAL NOTES

1. THE CONTRACTOR SHALL BE RESPONSIBLE FOR COORDINATING THE WORK OF ALL TRADES AND SHALL VERIFY ALL DIMENSIONS, CONDITIONS, AND UTILITY LOCATIONS PRIOR TO STARTING WORK.

2. THE CONTRACTOR SHALL USE ADEQUATE NUMBERS OF SKILLED WORKMEN WHO ARE COMPLETELY FAMILIAR WITH THE SPECIFIED REQUIREMENTS AND METHODS NEEDED FOR PROPER PERFORMANCE OF THE WORK.

3. CONCRETE SHALL HAVE A 28 DAY COMPRESSIVE STRENGTH (F'c) OF 2500 PSI MINIMUM OR AS DIRECTED BY ACI 318-11.

4. DESIGN CRITERIA:
   GOVERNING CODE: INTERNATIONAL BUILDING CODE, 2012 ED.
   SEISMIC: RISK CATEGORY III, DESIGN CATEGORY "E", Ie = 1.25
   WIND: 170 MPH (3-SEC GUST), EXPOSURE C

5. THE PURCHASER SHALL BE RESPONSIBLE FOR VERIFYING LOCAL BUILDING CODE REQUIREMENTS AND/OR PROJECT SPECIFICATIONS. ENGINEERING ASSISTANCE MAY BE REQUIRED TO COMPLY WITH LOCAL CODES OR INDIVIDUAL PROJECT SPECIFICATIONS.

6. FOR INDOOR INSTALLATIONS, THE BUILDING SHALL BE FULLY ENCLOSED AND DESIGNED TO RESIST WIND LOADS AS SPECIFIED IN CHAPTER 29 OF THE 2012 INTERNATIONAL BUILDING CODE.

STRUCTURAL STEEL NOTES

1. ALL STRUCTURAL AND MISCELLANEOUS SHAPES AND PLATES SHALL BE DESIGNED AND FABRICATED IN ACCORDANCE WITH "SPECIFICATION FOR STRUCTURAL STEEL FOR BUILDINGS, ANSI/AISC 360-10" (06-22-10) BY THE AMERICAN INSTITUTE OF STEEL CONSTRUCTION. CARBON STEEL SHAPES & PLATES SHALL CONFORM TO ASTM A36 OR A572 (36 KSI MINIMUM YIELD STRENGTH).

2. ALL WELDING SHALL BE DONE BY QUALIFIED WELDERS USING A PRE-APROVED PROCESS. ALL WELDS SHALL BE UNIFORM IN SIZE AND APPEARANCE AND FREE OF PINHOLES, POROSITY, UNDERCUTTING OR OTHER DEFECTS.

3. ALL WELDING SHALL CONFORM TO AWS D1.1 (LATEST EDITION) OF THE STRUCTURAL WELDING CODE. JOINT DETAILS SHALL COMPLY WITH AWS REQUIREMENT FOR JOINTS ACCEPTED WITHOUT QUALIFICATION TESTS.

4. WELD METAL SHALL HAVE A NOMINAL TENSILE STRENGTH OF 70,000 PSI MINIMUM.

5. UNLESS NOTED OTHERWISE STANDARD FINISH OF ALL RESTRAINT SYSTEM STEEL SHAPES & PLATES IS HOT-DIPPED GALVANIZED IN ACCORDANCE WITH ASTM A123. STAINLESS STEEL SHAPES CONFORMING TO ASTM A276, TYPE 304 OR 316 (30 KSI MINIMUM YIELD STRENGTH)

MAY BE SUBSTITUTED FOR CARBON STEEL SHAPES WHEN SPECIFIED ON CALCULATION DATA SHEET.

6. UNLESS NOTED OTHERWISE STANDARD FINISH OF ALL RESTRAINT SYSTEM HARDWARE IS HOT-DIPPED GALVANIZED IN ACCORDANCE WITH ASTM A153. STAINLESS STEEL SHAPES CONFORMING TO ASTM A276, TYPE 304 OR 316 (30 KSI MINIMUM YIELD STRENGTH) MAY BE SUBSTITUTED FOR CARBON STEEL SHAPES WHEN SPECIFIED ON CALCULATION DATA SHEET.

ANCHOR BOLTS

1. ANCHOR BOLTS SHALL BE FURNISHED AND INSTALLED AS SPECIFIED IN THESE CALCULATIONS. ANCHOR BOLTS ARE NOT FURNISHED BY POLY PROCESSING COMPANY.

2. THE MINIMUM DISTANCE AND CONCRETE THICKNESS SHOWN ON THE BASE CLIP CALCULATIONS ARE BASED ON INFORMATION FROM THE I.C.C. REPORT REFERENCED. IF THE ACTUAL EDGE DISTANCE OR CONCRETE THICKNESS IS LESS THAN THAT SHOWN, SPECIAL ENGINEERING ASSISTANCE IS REQUIRED.

SPECIAL INSPECTION NOTES

1. THE OWNER SHALL EMPLOY A QUALIFIED SPECIAL INSPECTOR WHO SHALL PROVIDE INSPECTION SERVICES TO VERIFY THAT THE INSTALLATION OF ANCHORS IS BEING PERFORMED IN ACCORDANCE WITH THE REFERENCED I.C.C. REPORT.

2. THE SPECIAL INSPECTOR SHALL SUBMIT A REPORT OR SERIES OF REPORTS TO THE BUILDING OFFICIAL, AND OTHER DESIGNATED PERSONS, STATING WHETHER THE ANCHOR INSTALLATION WAS, TO THE BEST OF THE INSPECTOR'S KNOWLEDGE, IN CONFORMANCE WITH APPROVED CALCULATIONS AND SPECIFICATIONS.

3. ANY DISCREPANCIES OBSERVED BY THE INSPECTOR SHALL BE BROUGHT TO THE ATTENTION OF THE CONTRACTOR FOR CORRECTION, THEN, IF UNCORRECTED, TO THE ENGINEER AND BUILDING OFFICIAL.

CABLES

1. ALL CABLES SHALL BE 7x19 CONSTRUCTION, STAINLESS STEEL AIRCRAFT TYPE, CONFORMING TO ASTM A492, TYPE 304 OR 316, MINIMUM BREAKING STRENGTH = 6,400 LBS.

2. GALVANIZED STEEL WIRE ROPES CONFORMING TO FEDERAL SPECIFICATION MIL-DTL-87161, TYPE 1, COMPOSITION A, MAY BE SUBSTITUTED FOR STAINLESS CABLES, MINIMUM BREAKING STRENGTH = 7,000 LBS.

U-BOLT CLIPS

1. TURN BACK THE SPECIFIED AMOUNT OF ROPE FROM THE THIMBLE (APPROXIMATELY 4¾"). APPLY THE FIRST CLIP W" (W = WIDTH OF CLIP SADDLE) FROM THE DEAD END OF THE WIRE ROPE (U-BOLT OVER DEAD END, LIVE END RESTS IN CLIP SADDLE). TURN ON NUTS FIRM, BUT DO NOT TIGHTEN.

LANE ENGINEERS, INC.

979 N. Blackstone ST. • Tulare, California 93274 • (559) 688-5263
www.laneengineers.com • FAX – (559) 688-8893

2. APPLY THE NEXT CLIP AS NEAR TO THE LOOP AS POSSIBLE. TURN ON NUTS FIRM, BUT DO NOT TIGHTEN.

3. TAKE UP ROPE SLACK AND TIGHTEN ALL NUTS EVENLY TO 15 LB/FT.

4. ROPE WILL STRETCH AND BE REDUCED IN DIAMETER WHEN LOADS ARE APPLIED. INSPECT PERIODICIALLY AND RETIGHTEN NUTS TO 15 LB/FT.

EYE NUTS

1. ALL EYE NUTS SHALL BE HOT-DIPPED GALVANIZED PER STRUCTURAL STEEL NOTE #6. OTHER FINISHES AVAILABLE UPON REQUEST.

2. ALL EYE NUTS SHALL HAVE A MINIMUM WORKING LOAD LIMIT FOR THE FOLLOWING THREAD SIZES:
   ½" THREAD: 2,250 LBS
   ⅝" THREAD: 3,600 LBS
   ⅞" THREAD: 7,200 LBS

3. THE WORKING LOAD LIMIT IS THE MAXIMUM LOAD WHICH SHOULD EVER BE APPLIED TO A PRODUCT, EVEN WHEN THE PRODUCT IS NEW AND WHEN THE LOAD IS UNIFORMLY APPLIED – STRAIGHT LINE PULL ONLY. **AVOID SIDE LOADING.**

CENTRIFUGE NO. 2 (UNIT 81)

CEILING HEIGHT REQUIREMENTS:

MINIMUM CEILING HEIGHT: 174.0 [4420] FROM FLOOR LINE.

MINIMUM CEILING HEIGHT FOR REMOVING ROTOR WITH DRYER IN PLACE: 282.0 [7163] FROM FLOOR LINE.

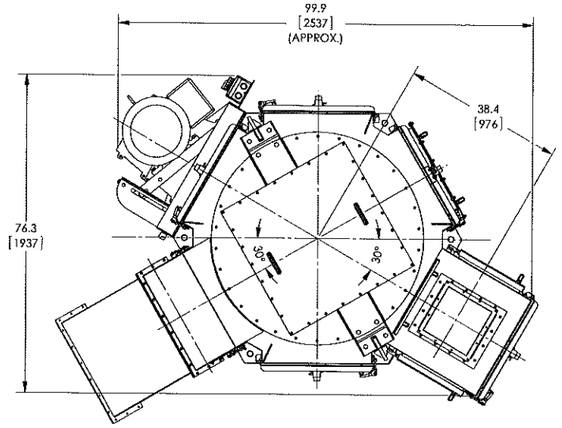

PLAN

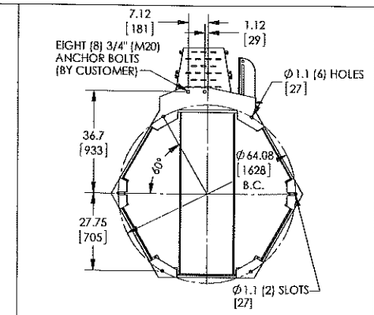

ANCHOR BOLT PLAN
(BOTTOM VIEW)

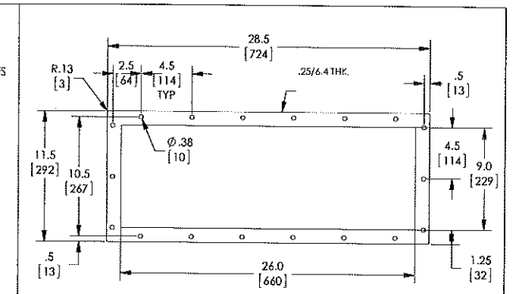

PELLET OUTLET FLANGE

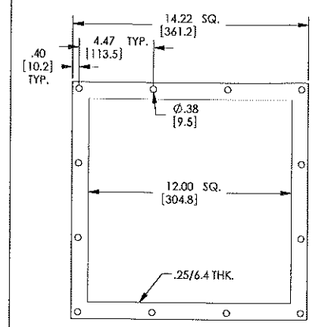

SLURRY INLET FLANGE

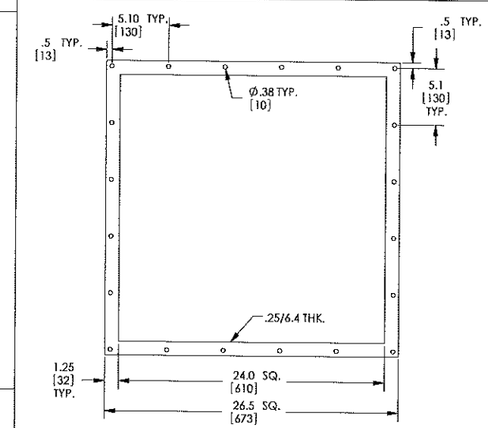

AIR OUTLET FLANGE

SPECIAL FEATURES

WIDE PELLET OUTLET (9" X 26" INSIDE)
WIDE PELLET OUTLET CHUTE EXTENSION
BLANK FEED SCREEN
AIR OUTLET AND INLET COVERS (SHOWN)
NO FILTER HOUSING
ARRANGEMENT "M"
S/S SUPPORT STAND (BOTTOM SUPPORT BRACE)
12" SQ. SLURRY INLET FLANGE (MODEL 12)

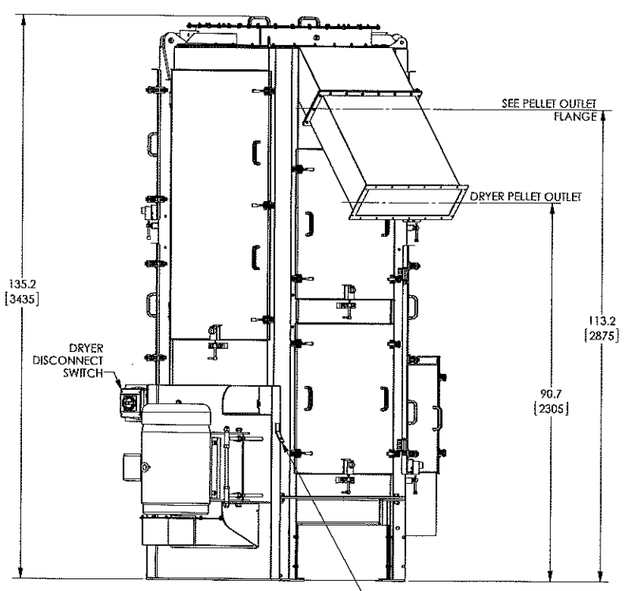

LEFT SIDE ELEVATION

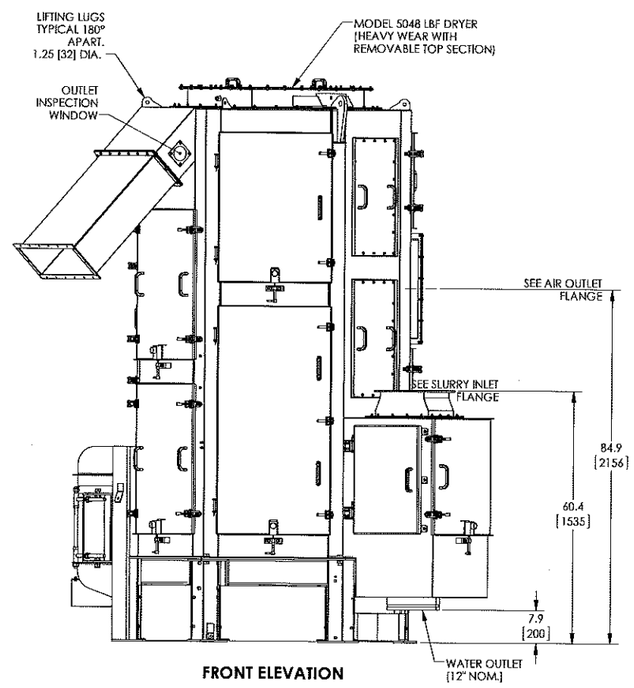

FRONT ELEVATION

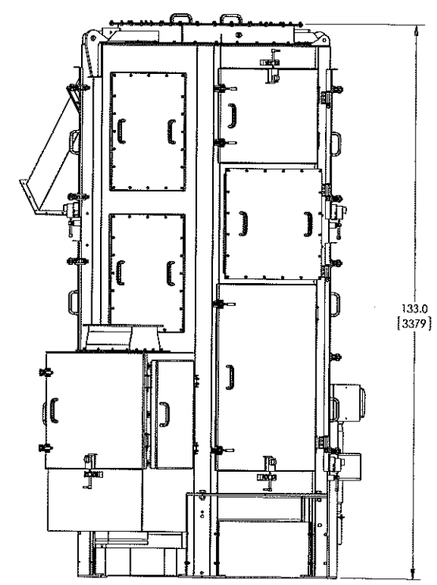

RIGHT SIDE ELEVATION

GENERAL NOTES:

1-PROVIDE THREE (3) FEET (914MM) OF CLEAR SPACE AROUND DRYER FOR DOOR ACCESS

2-DIMENSIONAL TOLERANCES UNLESS OTHERWISE NOTED ARE +/-1.0 (24mm)

3-DETAIL FLANGE DIMENSIONS DO NOT INCLUDE INTERIOR WALL THICKNESSES.

4-REFER TO INSTALLATION INSTRUCTIONS FOR ADDITIONAL INFORMATION.

5-DRYER SHOULD NEVER BE STARTED WHILE FULL OR PARTIALLY FULL OF MATERIAL. DAMAGE TO THE MACHINE CAN OCCUR.

6-DRYER SHOULD NOT BE SUBJECTED TO EXCESSIVE "SURGE FEEDING" OF INPUT MATERIAL AS PART FAILURES AND IMPROPER PERFORMANCE WILL OCCUR.

7-CAUTION: DRYER SHOULD NEVER BE LIFTED WITH ANY MAJOR OPTIONAL EXTRA EQUIPMENT MOUNTED IN PLACE AS IT IS NOT DESIGNED TO SUPPORT ADDITIONAL WEIGHT.

8- THE MINIMUM VERTICAL SLURRY PIPE LENGTH ABOVE THE INLET OF GALA'S DRYER OR AGGLOMERATE CATCHER SHOULD BE NO LESS THAN 3 TIMES THE NOMINAL PIPE DIAMETER FOR PIPE SIZES FROM 6" NOMINAL TO 18" NOMINAL.

THE MAXIMUM ACCUMULATIVE VERTICAL DROP OF THE SLURRY MIXTURE ENTERING GALA'S DRYER OR AGGLOMERATE CATCHER SHOULD BE NO MORE THAN 6 TIMES THE NOMINAL PIPE DIAMTER FOR PIPE SIZES FROM 6" NOMINAL TO 18" NOMINAL.
IF THERE ARE ANY QUESTIONS CONERNING THIS, CONTACT GALA'S CUSTOMER SERVICE DEPARTMENT.

9-DESIGN DRYER FOUNDATION FOR STATIC LOAD OF 20,004 lbs.:
(WEIGHT OF WATER IF DRYER FILLED COMPLETELY (APPROX. 14,199 lbs.) + DRYER WEIGHT LISTED BELOW.)
THE DYNAMIC LOAD IS NIL.

CUSTOMER: EXIDE TECHNOLOGIES

P.O. NUMBER: 2355429

CERTIFIED DRAWING RELEASED FOR INSTALLATION
BY: WKU DATE: 07/27/12

CONFIDENTIAL
DO NOT DUPLICATE WITHOUT WRITTEN CONSENT OF GALA INDUSTRIES, INC.

DRAWING TITLE: 5048 LBF DRYER
INSTALLATION DATA
ARRANGEMENT "M"

Gala Industries, Inc.
181 Pouley Street, Eagle Rock, VA. 24085 U.S.A.
Tel. 540-864-2587 Fax 540-864-2310

DRAWN	S.Anderson	DATE	01/20/2012
CHECKED	B.Thacker	SCALE	1:16
SIZE	A	DRAWING NO.	11101116 DRY
MATERIAL	AS NOTED	DIMENSIONS	INCHES / MM
REV	01	SHEET	5433.0

SOLIDWORKS

REVISIONS				
REV.	DATE	-	BY	CHK
01	07/27/2012	--	WKU	JRK

BAGHOUSE BUILDING SUMP 3
OXIDATION TANK AREA SUMP
MUD TANK AREA SUMP 1
AND
MUD TANK AREA SUMP 2

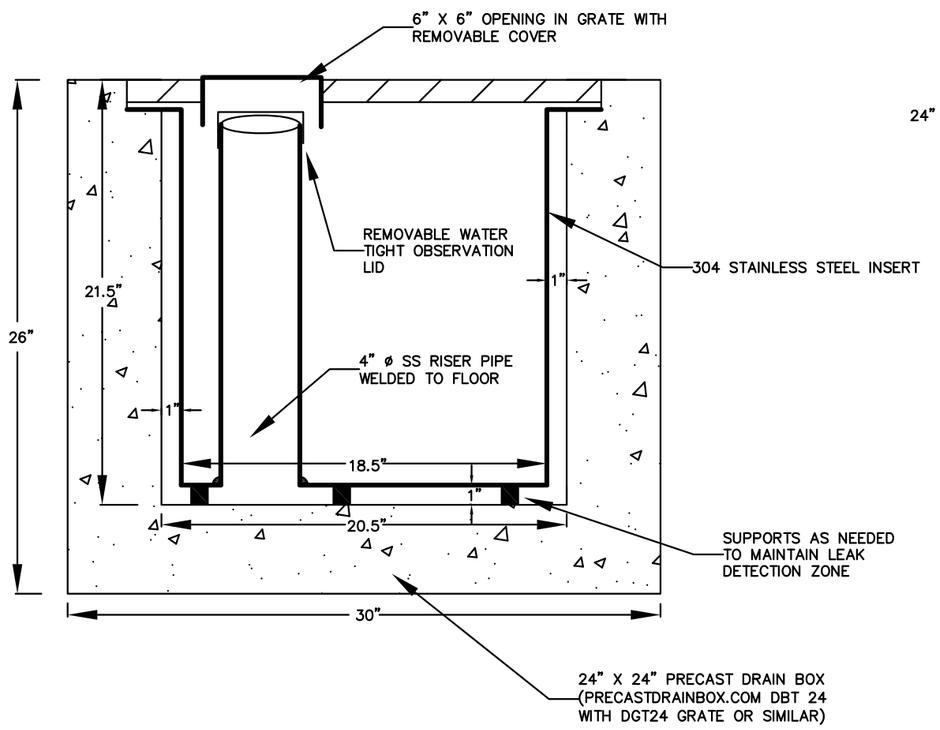

CROSS SECTION

NOT TO SCALE

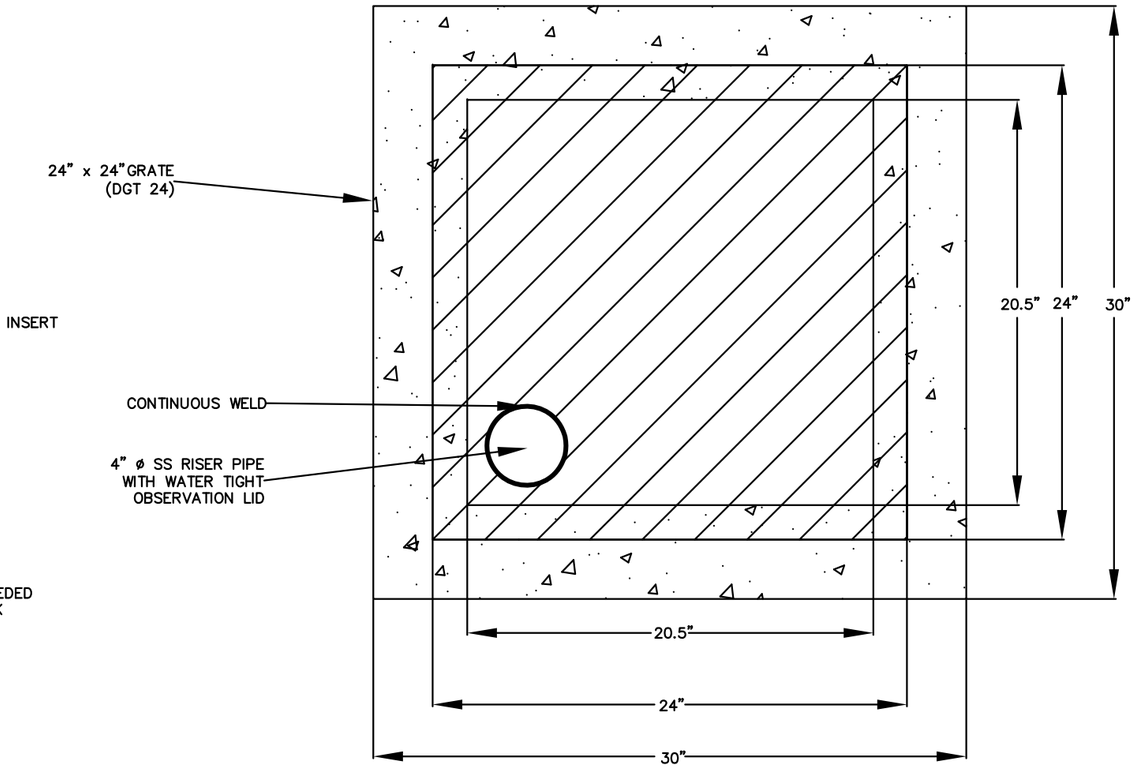

PLAN VIEW

NOT TO SCALE

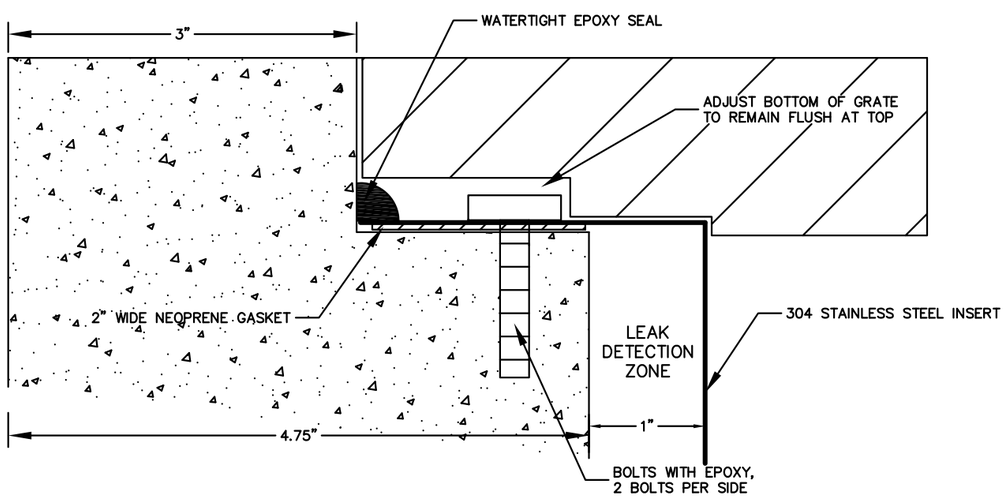

GRATE DETAIL

NOT TO SCALE

SUMP DETAILS

PROJECT MANAGER:	JWD	SCALE:	NTS
CHECKED BY:	JWD	PROJECT NUMBER:	2013-2993-01
DRAWN BY:	KEZ	DATE:	3/28/14

ADVANCED GeoServices
Engineering for the Environment. Planning for People.™
1055 ANDREW DRIVE, SUITE A, WEST CHESTER PA, 19380
tel 610.840.9100 fax 610.840.9199 www.advancedgeoservices.com

EXIDE TECHNOLOGIES

VERNON, CA

Figure

1

F:\Projects\2013\20132993 - Exide Vernon Permitting Assistance\Cad\Drainage Sump DETAIL.dwg