TABLES

Table 3 - Metal and PCB data from Atlas Iron and Metals site - deep confirmation samples taken on 8/31/2006

	Sample Number						
mg/kg	#1-5'	#2-3.5'	#3-4'	#4-3'	#5-3'	#6-3'	#7-3'
Antimony	<3	8.6	3	3	3	3	10.2
Arsenic	<5	0.5	5	5	5	5	5
Barium	440	7.2	14.7	8.5	6.9	10.6	31.1
Beryllium	<1	0.1	1	1	1	1	1
Cadmium	<1	0.1	1.5	1	1	1	1
Chromium(total)	36.7	55.5	27.0	23.7	117	23.4	20.1
Cobalt	<1	0.1	1	1	1	1	1.4
Copper	42.2	27.4	67.6	18.9	15.9	37.1	148
Lead	<5	13.4	6.8	5	16.7	136	30.4
Mercury	0.18	0.34	0.22	0.20	0.1	0.24	0.31
Molybdenum	<1	1.5	1	4.4	1	3.5	11.5
Nickel	49.5	7.7	25.0	10.2	4.8	5.8	8.9
Selenium	<8	0.8	8	8	8	8	8
Silver	27.9	1.6	25.1	1.8	2.7	1	1.1
Thallium	<4	0.4	4	4	4	4	4
Vanadium	54.8	0.1	1	1	1	1	1
Zinc	109	77.3	82.9	62.6	98.8	291	199
PCB, mg/kg							
PCB-1016	0.1	0.1	0.1	0.1	0.1	0.1	0.1
PCB-1221	0.1	0.1	0.1	0.1	0.1	0.1	0.1
PCB-1232	0.1	0.1	0.1	0.1	0.1	0.1	0.1
PCB-1242	0.1	3.2	0.1	0.1	0.1	0.5	0.1
PCB-1248	0.1	0.1	0.1	0.1	0.1	0.1	0.1
PCB-1254	0.1	2.9	0.1	0.1	0.1	1.6	0.1
PCB-1260	0.1	0.1	0.1	0.1	0.1	0.1	0.1

Table 4 - Metal and PCB data from Atlas Iron and Metals site - surface confirmation samples taken on 9/12/2006

TTLC	Sample Number								
mg/kg	#1	#2	#3	#4	'#5	#6	#7	#8	#9
Antimony	21	10	11	10	3	11	6	8	27
Arsenic	41	5	5	5	5	5	5	5	28
Barium	2,180	150	672	116	152	142	92	407	1,190
Beryllium	1	1	1	1	1	1	1	1	14
Cadmium	33	1	9	1	1	1	3	13	30
Chromium(total)	152	25	133.0	23	22	25	32	142	436
Cobalt	18	9	11	8	6	7	5	9	21
Copper	1,060	31	572	28	30	21	2,430	3,930	3,360
Lead	12,900	5	2,810	9	30	7	350	2,570	5,640
Mercury	5	0.2	2.3	0.10	0.2	0.2	0.2	7	5.3
Molybdenum	21	1	6	1	1	1	1	42	50
Nickel	94	19	100.0	17	14	15	35	117	398
Selenium	8	8	8	8	8	8	8	8	8
Silver	2	1	1	1	1	1	1	2	4
Thallium	4	4	4	4	4	4	4	4	5
Vanadium	18	28	29	31	27	32	21	24	24
Zinc	12,300	89	2,150	71	138	69	3,340	2,390	6,400
TCLP - mg/l									
Arsenic	0.05	0.05	0.05	0.05	0.05	0.05	0.05	0.05	0.36
Barium	4.36	0.49	1.98	0.36	0.45	0.40	0.33	1.85	3.14
Cadmium	1.48	0.01	0.41	0.01	0.01	0.01	0.03	0.36	1.15
Chromium (total)	0.22	0.03	0.21	0.02	0.04	0.03	0.05	0.25	0.62
Lead	141.00	0.05	87.50	0.09	0.31	0.05	0.48	76.80	64.30
Mercury	0.12	0.01	0.08	0.01	0.01	0.01	0.01	0.10	0.11
Selenium	0.08	0.08	0.08	0.08	0.08	0.08	0.08	0.08	0.08
Silver	0.01	0.01	0.01	0.01	0.01	0.01	0.01	0.01	0.01
PCB mg/kg									
PCB-1016	0.1	0.1	0.1	0.1	0.1	0.1	0.1	0.1	0.1
PCB-1221	0.1	0.1	0.1	0.1	0.1	0.1	0.1	0.1	0.1
PCB-1232	0.1	0.1	0.1	0.1	0.1	0.1	0.1	0.1	0.1
PCB-1242	0.1	0.1	2.7	0.1	0.1	0.1	0.1	0.1	3.6
PCB-1248	0.1	0.1	0.1	0.1	0.1	0.1	0.1	6.1	0.1
PCB-1254	2.7	0.1	4.3	0.1	0.1	0.1	0.1	0.1	8.3
PCB-1260	0.1	0.1	0.1	0.1	0.1	0.1	0.1	3.6	0.1

FIGURES

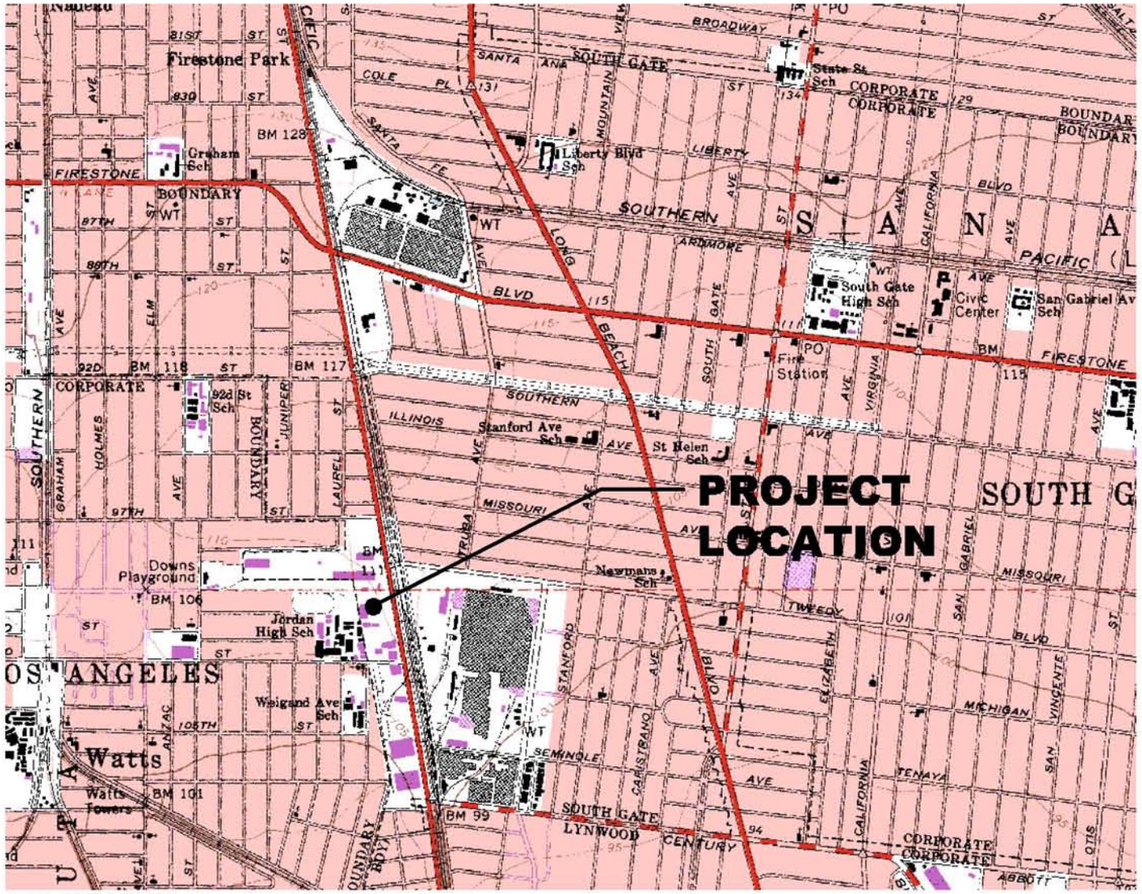

MAP REFERENCE:
USGS 7.5 MIN QUADRANGLE
TITLED: SOUTH GATE, CALIFORNIA
DATED: 1964
REVISED: 1981

SCALE
0 2000 4000 FEET

MAP REFERENCE:
GOOGLE EARTH

SCALE
0 500 1000 FEET

REED INTERNATIONAL, LTD.

Figure 1
VICINITY MAP

ATLAS METALS
10019 ALAMEDA ST. LOS ANGELES, CALIFORNIA

DATE: 2-22-07	SCALE: AS SHOWN	DRAWN BY: PPP

STAR-DATE

ILLUSTRATION
San Mateo, CA (650) 572-8890

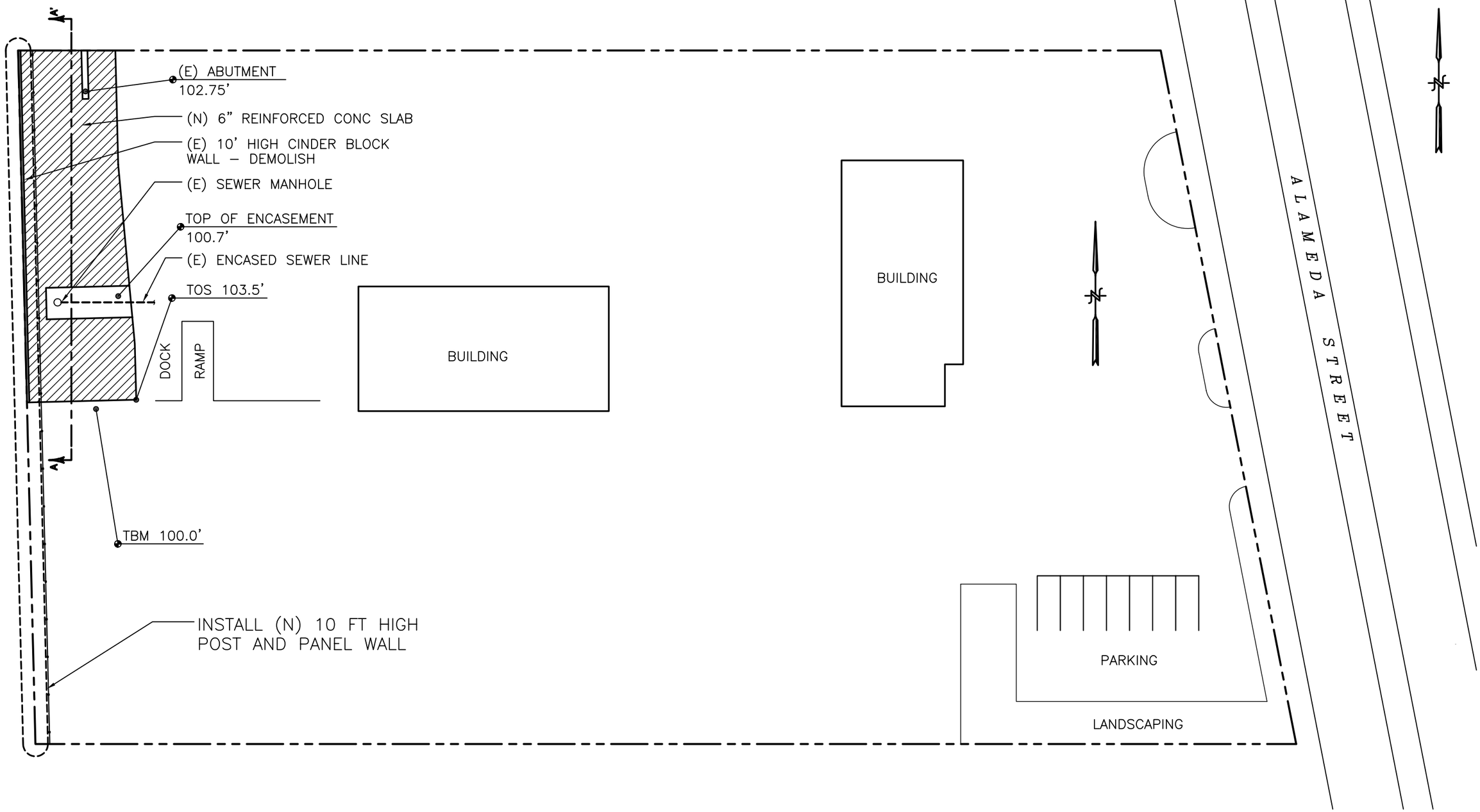

LEGEND:

A A CROSS SECTION (SEE FIG 3)

SCALE

0 40 80 FEET

REED INTERNATIONAL, LTD.

Figure 2

SITE PLAN

ATLAS METALS
10019 ALAMEDA ST. LOS ANGELES, CALIFORNIA

DATE: 2–19–07	SCALE: AS SHOWN	DRAWN BY: PPV

STAR–DATE

PPV ILLUSTRATION
San Mateo, CA · (650) 572–8690

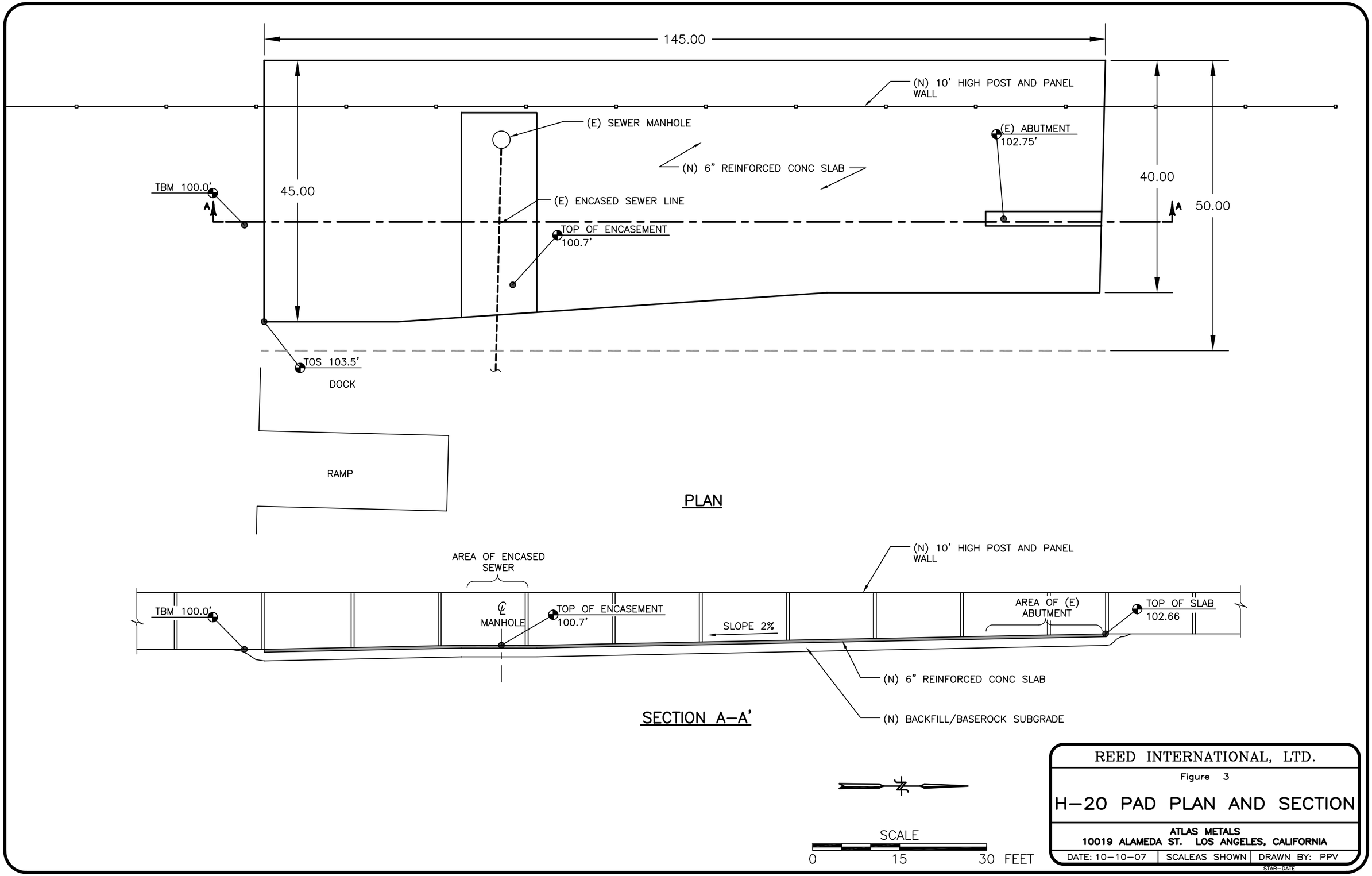

REED INTERNATIONAL, LTD.

Figure 3

H–20 PAD PLAN AND SECTION

ATLAS METALS
10019 ALAMEDA ST. LOS ANGELES, CALIFORNIA

DATE: 10–10–07	SCALE: AS SHOWN	DRAWN BY: PPV

STAR–DATE

PPV ILLUSTRATION
San Mateo, CA · (650) 572–5690

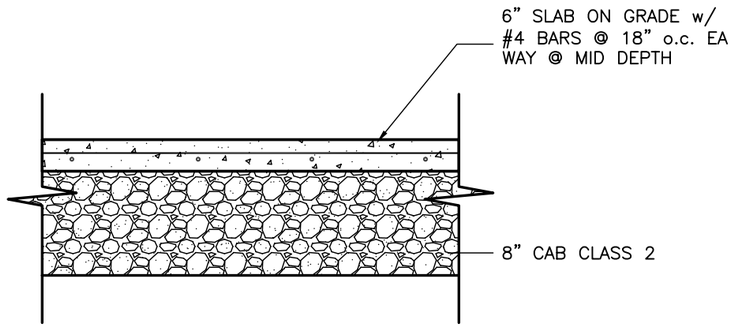

1 / SK3 TYPICAL SLAB CROSS SECTION w/ H20 LOADING

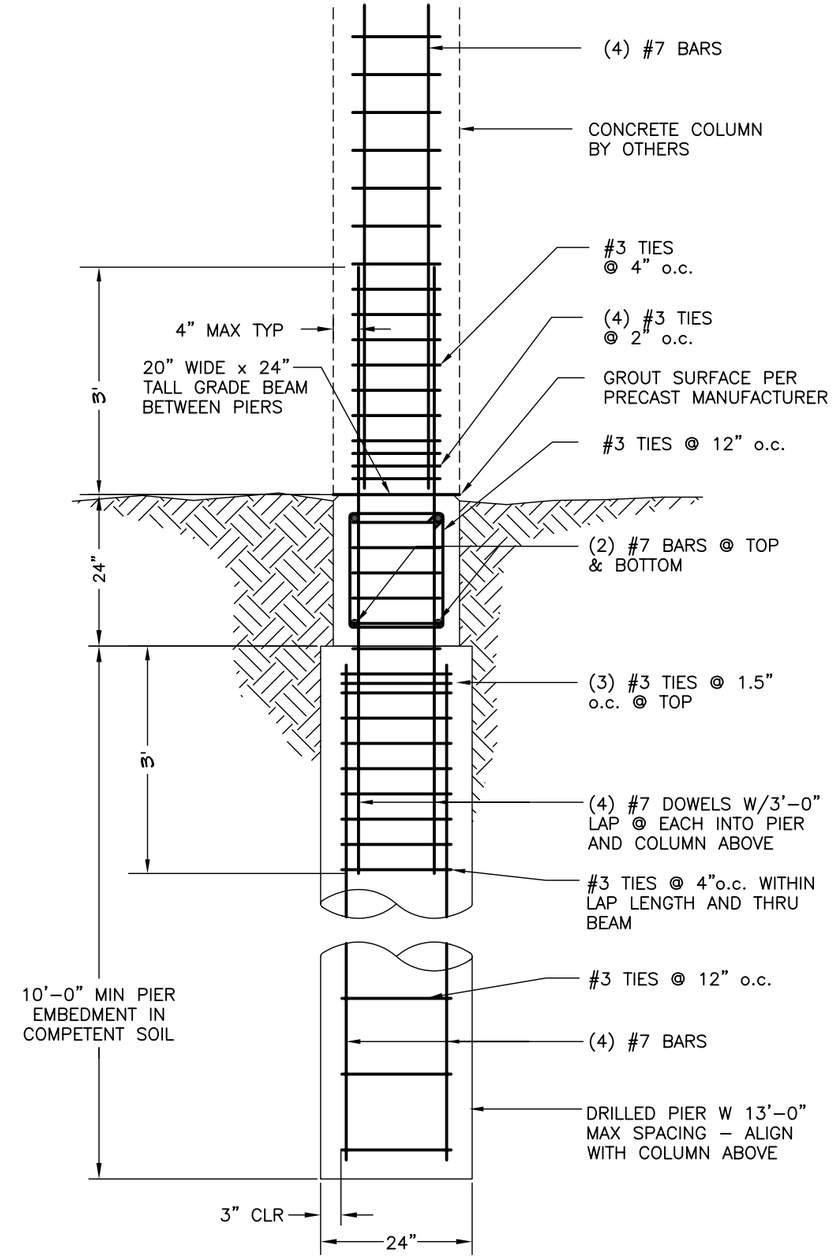

1 / SK4 PIER AND GRADBEAM DETAIL

GENERAL NOTES:

1. THE NOTES APPLY TO ALL DRAWINGS.
2. ALL WORK SHALL BE IN ACCORDANCE WITH ALL FEDERAL, STATE, AND LOCAL BUILDING CODES AND SAFETY ORDINANCES IN EFFECT AT THE PLACE OF BUILDING, REF 2001 CBC (1997 UBC W/ CALIFORNIA INSERTS).
3. IN THE EVENT CERTAIN FEATURES OF THE CONSTRUCTION ARE NOT FULLY SHOWN, THEIR CONSTRUCTION SHALL BE SHOWN FOR SIMILAR FEATURES.
4. ANY CONFLICTS OR DISCREPANCIES BETWEEN THE DRAWINGS AND SITE CONDITIONS SHALL BE IMMEDIATELY BROUGHT TO THE ATTENTION OF THE ENGINEER AND CORRECTED AS DIRECTED BY THE ENGINEER.
5. CONTRACTOR AGREES THAT HE SHALL ASSUME SOLE AND COMPLETE RESPONSIBILITY FOR JOB SITE CONDITIONS DURING THE COURSE OF CONSTRUCTION OF THIS PROJECT, INCLUDING SAFETY OF ALL PERSONS AND PROPERTY; THAT THIS REQUIREMENT SHALL APPLY CONTINUOUSLY AND NOT BE LIMITED TO NORMAL WORKING HOURS; AND THAT THE CONTRACTOR SHALL DEFEND, INDEMNIFY AND HOLD THE OWNER AND THE ENGINEER HARMLESS FROM ANY AND ALL LIABILITY, REAL OR ALLEGED, IN CONNECTION WITH THE PERFORMANCE OF WORK ON THIS PROJECT, EXCEPTING FOR LIABILITY ARISING FROM THE SOLE NEGLIGENCE OF THE OWNER OR THE ENGINEER.
6. CONTRACTOR ACKNOWLEDGES THAT HE HAS THOROUGHLY FAMILIARIZED HIMSELF WITH THE BUILDING SITE CONDITIONS, GRADES, ETC, WITH THE DRAWINGS AND SPECIFICATIONS, WITH THE DELIVERY FACILITIES AND ALL OTHER MATTERS AND CONDITIONS WHICH MAY AFFECT THE OPERATION AND COMPLETION OF THE WORK AND ASSUMES ALL RISKS THEREFROM.
7. CONTRACTOR SHALL BE RESPONSIBLE FOR LOCATING ALL UNDERGROUND UTILITIES. ALL DAMAGE SHALL BE REPAIRED AT THE EXPENSE OF THE CONTRACTOR'S EXPENSE.
8. THE DRAWINGS SCHEMATICALLY INDICATE EXISTING AND NEW CONSTRUCTION. DUE TO THE NATURE OF THE WORK ADJUSTMENTS WILL LIKELY BE REQUIRED IN THE FIELD TO MEET THE DESIGN OBJECTIVES. SUCH ADJUSTMENTS ARE PART OF THE CONTRACT AND SHALL BE INCLUDED IN THE LUMP SUM BID.
9. CONTRACTOR SHALL BE RESPONSIBLE FOR ALL TEMPORARY SHORING. SHORING SHALL BE PROVIDED TO SUPPORT THE EXISTING STRUCTURE UNTIL ALL WORK ON THE DRAWINGS ARE COMPLETED.
10. SOILS REPORT INCLUDED AS PART OF WORK PLAN.
11. GEOTECHNICAL ENGINEER TO INSPECT BOTTOM OF FOOTING BEFORE POURING CONCRETE FOR MINIMUM EMBEDMENT INTO COMPETENT SOIL

REED INTERNATIONAL, LTD.

Figure 4

WALL/FOUNDATION/SLAB DETAILS AND NOTES

ATLAS METALS
10019 ALAMEDA ST. LOS ANGELES, CALIFORNIA

DATE: 12-10-07	SCALE:AS SHOWN	DRAWN BY: PPV

STAR-DATE

PPV ILLUSTRATION
San Mateo, CA · (650) 572-8690

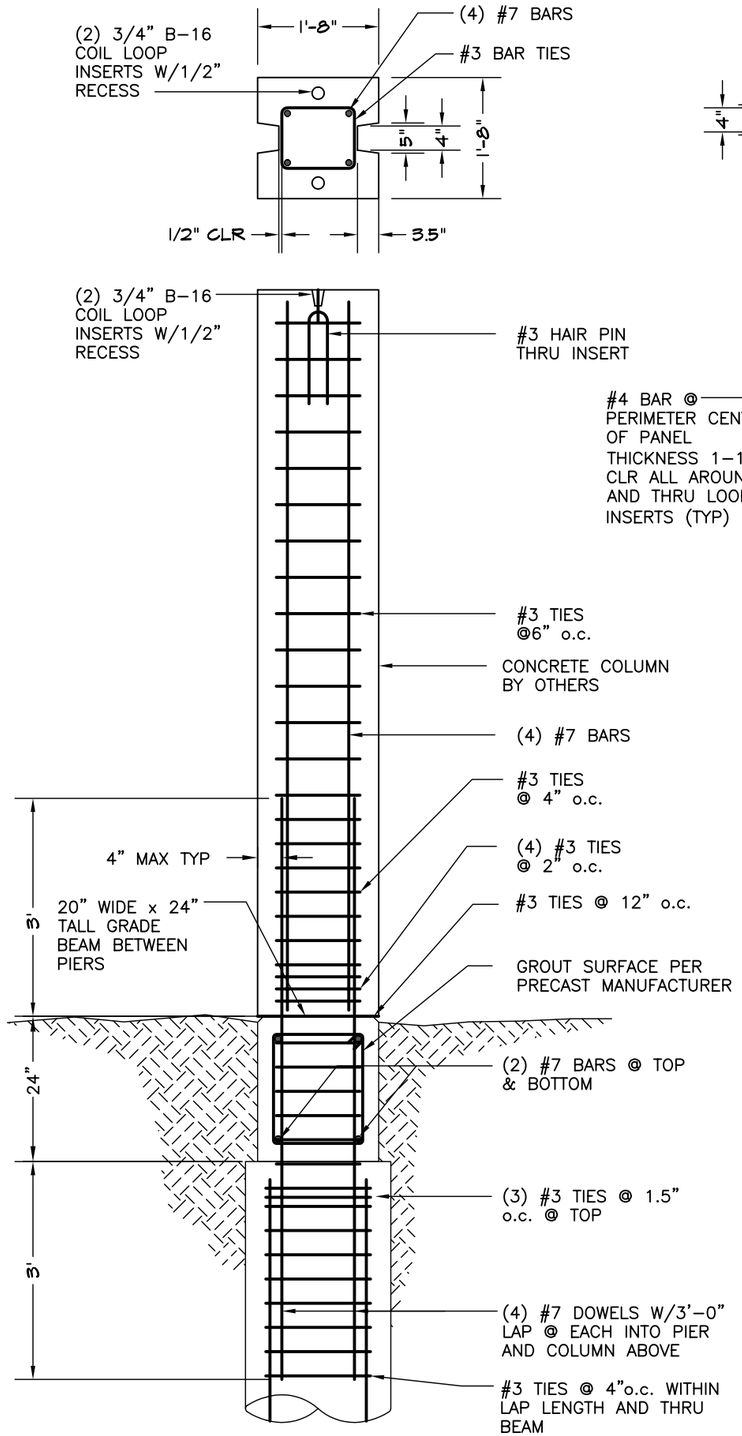

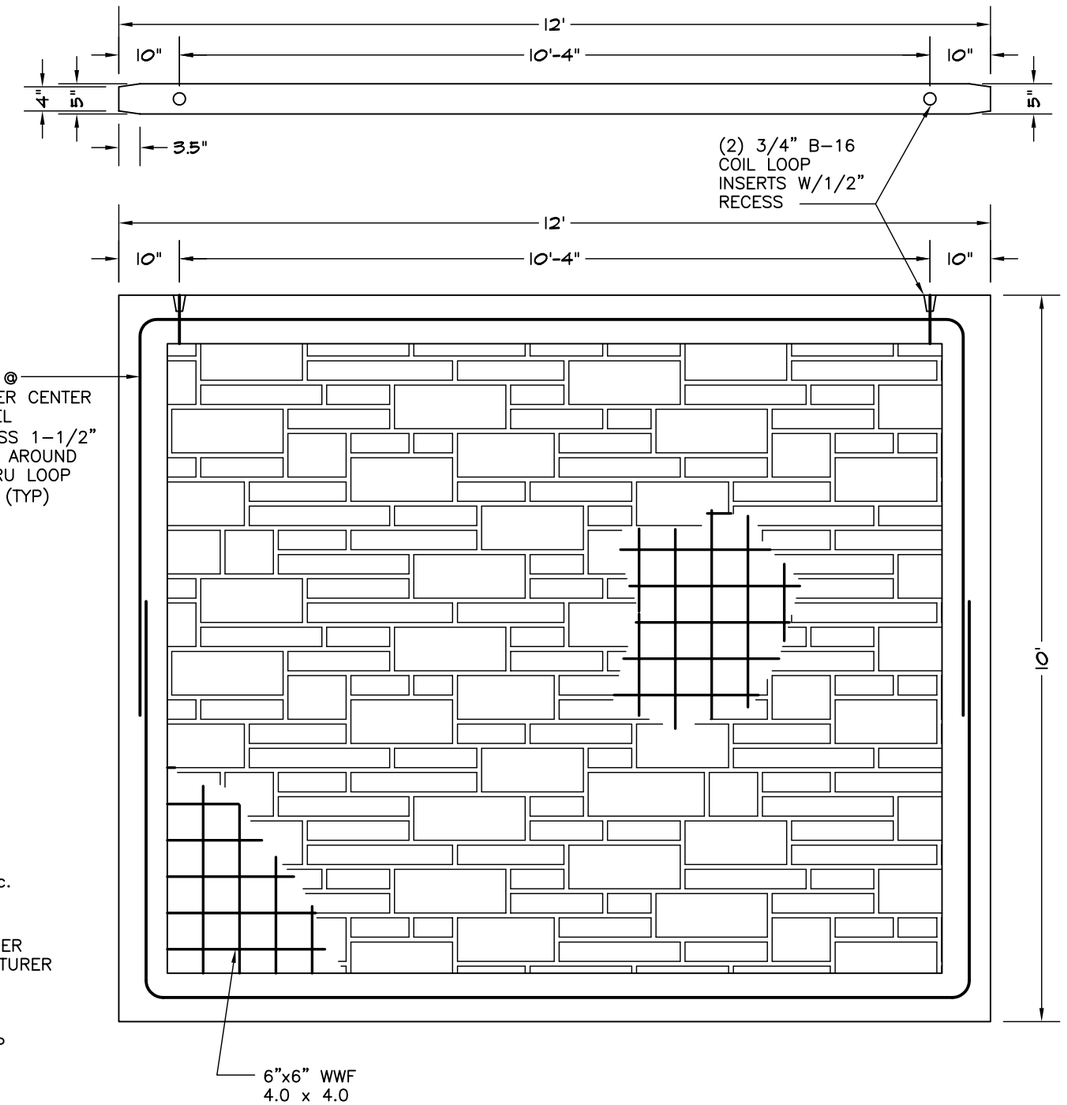

GENERAL STRUCTURAL NOTES

CODE: 2003 INTERNATIONAL BUILDING CODE

DESIGN CRITERIA:
GROUND SNOW LOAD: NOT APPLICABLE
BASIC WIND SPEED: 70 MPH, EXPOSURE C
SEISMIC DESIGN CATEGORY: D
SITE CLASS: D
BUILDING CATEGORY: I

SNOW DESIGN CRITERIA:
FLAT ROOF SNOW LOAD Pf: NOT APPLICABLE
SNOW EXPOSURE FACTOR Ce: NOT APPLICABLE
SNOW LOAD IMPORTANCE FACTOR Is: NOT APPLICABLE
THERMAL FACTOR Ct: NOT APPLICABLE

WIND DESIGN CRITERIA:
WIND IMPORTANCE FACTOR Iw: 0.87
INTERNAL PRESSURE COEFFICIENT = 0.00 (OPEN)
ALL COMPONENTS AND CLADDING SHOWN ON THESE DOCUMENTS

SEISMIC DESIGN CRITERIA:
SEISMIC IMPORTANCE FACTOR IE: 1.0
SEISMIC USE GROUP: I
SPECTRAL ACCELERATION SS: 1.583g, S1: 0.615g
SEISMIC FORCE RESISTING SYSTEM: NON BUILDING
SIGNS AND BILLBOARDS
DESIGN BASE SHEAR: 1001 LBS . PER COLUMN
SEISMIC RESPONSE COEFFICIENT CS: 0.26
RESPONSE MODIFICATION FACTOR R: 3
ANALYSIS PROCEDURE: EQUIVALENT STATIC

FOUNDATION:
1. PRIOR TO START OF CONSTRUCTION, CONTRACTOR TO VERIFY LOCATION AND EXTENT OF PROPOSED NEW POST AND PANEL WALL

REINFORCED CONCRETE

1. POST AND PANEL CONCRETE TO BE 4000 PSI.
2. FOOTING CONCRETE TO BE 3000 PSI.
3. MINIMUM SOIL LATERAL BEARING ALLOWABLE: 150 PSF
4. CONCRETE SHALL BE MIXED AND DELIVERED IN ACCORDANCE WITH ASTM-C94 WITH A MAXIMUM SLUMP OF 4 INCHES.

STRUCTURAL STEEL

1. REBAR SHALL CONFORM WITH ASTM 615, GRADE 60

REED INTERNATIONAL, LTD.

Figure 5

POST AND PANEL WALL DETAILS AND NOTES

ATLAS METALS
10019 ALAMEDA ST. LOS ANGELES, CALIFORNIA

DATE: 12-10-07	SCALE:AS SHOWN	DRAWN BY: PPV

STAR-DATE

PPV ILLUSTRATION
San Mateo, CA · (650) 572-6690