California Environmental Protection Agency
Department of Toxic Substances Control

DRAFT HAZARDOUS WASTE FACILITY PERMIT

Facility Name:
Shell Martinez Refinery
3485 Pacheco Boulevard
P.O. Box 711
Martinez, California 94553-0071

Owner Name:
Equilon Enterprises, LLC
P.O. Box 4453
Houston, TX 77210-4453

Operator Name:
Shell Oil Products US
P.O. Box 4453
Houston, TX 77210-4453

Permit Number:

Facility EPA ID Number:
CAD 009164021

Effective Date of Permit: xxx

Expiration Date of Permit: xxx

Pursuant to California Health and Safety Code, section 25200, this Resource Conservation and Recovery Act (RCRA) - equivalent Hazardous Waste Facility Permit is hereby issued for the Shell Martinez Refinery.

The issuance of this Permit is subject to the terms and conditions set forth in Attachment A and the Part "B" Application (Operation Plan) dated March 1, 2005. The Attachment A consists of 32 pages.

_____

Mohinder S. Sandhu, P.E., Chief
Standardized Permitting and Corrective Action Branch
Department of Toxic Substances Control

Date: _____

Shell Martinez Refinery
3485 Pacheco Boulevard
P.O. Box 711
Martinez, CA 94553
EPA ID No. CAD 009164021

HAZARDOUS WASTE FACILITY PERMIT

ATTACHMENT "A"

TABLE OF CONTENTS

Page

I. DEFINITIONS 4

II. DESCRIPTION OF THE FACILITY AND OWNERSHIP 5

1. OWNER OF FACILITY 5
2. OWNER OF REAL PROPERTY 5
3. OPERATOR OF FACILITY 5
4. LOCATION 5
5. DESCRIPTION OF FACILITY OPERATIONS 5
6. FACILITY HISTORY 6
7. FACILITY SIZE AND TYPE FOR FEE PURPOSES 7

III. GENERAL CONDITIONS 8

1. PERMIT APPLICATION DOCUMENTS 8
2. EFFECT OF PERMIT 8
3. COMPLIANCE WITH CALIFORNIA ENVIRONMENTAL QUALITY ACT (CEQA) 10
4. ANNUAL HAZARDOUS WASTE REDUCTION AND MINIMIZATION CERTIFICATION 10
5. ACCESS 10

IV. PERMITTED UNITS AND ACTIVITIES 11

1. UNIT #1 TANK 12038 11
2. UNIT #2 CARBON MONOXIDE BOILERS (CO BOILER 1, 2, AND 3) 14

V. SPECIAL CONDITIONS 22

VI. CORRECTIVE ACTION FOR SOLID WASTE MANAGEMENT UNITS 24

TABLES

1. PERMITTED WASTE STREAMS 13

2. CO BOILERS AUTOMATIC WASTE FEED CUTOFF LIMITS 21

APPENDIX

1. LIST OF PARCEL NUMBERS FOR THE ENTIRE FACILITY 26

FIGURES

1. FACILITY LAYOUT (SHELL MARTINEZ REFINERY) 27

2. PERMITTED UNIT #1 – TANK 12038 28

3. PERMITTED UNIT #2 – CO BOILERS 1, 2, AND 3 29

4. ETP-1 BIOTREATER 30

5. PROCESS FLOW DIAGRAM FOR PERMITTED UNIT #1 – TANK 12038 ... 31

6. PROCESS FLOW DIAGRAM FOR PERMITTED UNIT #2 – CO BOILERS . 32

PART I. DEFINITIONS

All terms used in this Permit shall have the same meaning as those terms have in the California Health and Safety Code, division 20, chapter 6.5 and California Code of Regulations, title 22, division 4.5, unless expressly provided otherwise by this Permit.

1. **"DTSC"** as used in this Permit means the California Department of Toxic Substances Control.

2. **"Facility"** as used in this Permit means all contiguous land and structures, other appurtenances, and improvements on the land used for the treatment, transfer, storage, resource recovery, disposal or recycling of hazardous waste. A hazardous waste facility may consist of one or more treatment, transfer, storage, resource recovery, disposal or recycling operational units or combinations of these units.

   For the purpose of implementing corrective action under California Code of Regulations, title 22, division 4.5, a hazardous waste facility includes all contiguous property under the control of the owner or operator required to implement corrective action.

3. **"Permittee"** as used in this Permit means the Owner and Operator.

PART II. DESCRIPTION OF THE FACILITY AND OWNERSHIP

1. OWNER OF FACILITY:

The facility owner is Equilon Enterprises, LLC (hereafter "owner").

2. OWNER OF REAL PROPERTY:

The real property owner is Equilon Enterprises, LLC.

3. OPERATOR OF FACILITY:

The facility operator is Shell Oil Products US (hereafter "operator").

4. LOCATION:

The Shell Martinez Refinery facility ("Facility"), is located at 3485 Pacheco Boulevard in Martinez, California. The Facility encompasses approximately 1000 acres of land on the south shore of the Carquinez Straits. (Figure 1). The Facility has numerous county Assessor's Parcel numbers (Appendix 1). The CO Boilers and Tank 12038, which are the specific units identified in this Permit, are located on the parcels shown below.

CO Boilers: Latitude 38° 1' 37" / Longitude 122° 6' 51"
Township 2 North, Range 2 West, Section 17
Mt. Diablo Base and Meridian
Parcel No. 378-110-009-8

Tank 12038: Latitude 38° 1' 21" / Longitude 122° 7' 8"
Township 2 North, Range 2 West, Section 18
Mt. Diablo Base and Meridian
Parcel No. 378-110-013-1

5. DESCRIPTION OF FACILITY OPERATIONS:

The Facility is an oil refining complex on 1,000 acres of land. The Facility began its operations at this location in 1914. Its operations include light oil processing which yields primarily gasoline, diesel and aviation turbine fuels, and heavy oil processing, which yields marine fuel oils, coke and asphalt products. The Facility is permitted to three carbon monoxide boilers (CO Boilers 1, 2, and 3) and a storage tank (Tank 12038) to manage hazardous wastes (Figure 1). Another unit, the Effluent Treatment Plant No. 1 (ETP-1, aka: biotreater), was previously authorized in DTSC's 1995 Permit to store and treat hazardous wastewaters, but now is not authorized to accept hazardous waste. This biotreater is a 1.4-acre, unlined, surface impoundment (Figure 4). DTSC has allowed the closure of ETP-1 to be delayed until it ceases to

operate at which time the approved closure plan specified in the Part B application, listed in Part III.1 of this Permit, shall be implemented.

6. FACILITY HISTORY:

On September 30, 1988, predecessors to the Permittee submitted one application to the U.S. Environmental Protection Agency (U.S. EPA) and the California Department of Health Services, Toxic Substances Control Program (the predecessor to DTSC), for permits to operate a hazardous waste facility. (Shell applied for both federal and State permits).

a) On May 8, 1990, U.S. EPA issued the Permittee a Resource Conservation and Recovery Act (RCRA) Hazardous Waste Facility Permit (RCRA permit) for the management of hazardous wastes. The RCRA permit became effective on June 30, 1990 and expired on June 30, 1995. The hazardous waste management units included in the RCRA permit were the RM-17 Incinerator, CO Boilers Nos. 1, 2, and 3, Tank 12038 and Vessel 482. This permit was based on Part B application (September 1988), the RM-17 Incinerator Trial Burn Report (June 5, 1989) and CO Boiler No. 1 Trial Burn Report (April 21, 1989).

b) On August 1, 1992, U.S. EPA granted authorization to DTSC to enforce the RCRA permit.

c) On January 16, 1995, the Permittee applied for renewal of the RCRA permit.

d) DTSC renewed the RCRA Permit effective December 30, 1995. The permit was based on a Part B application (dated May 1995), including Trial Burn Reports for CO Boiler No. 2 (November 1991), RM-17 Incinerator (November 1993) and CO Boiler No. 3 (December 1993).

e) On December 27, 1996, the RM-17 incinerator was closed and it is no longer a permitted unit.

f) On April 3, 1997, the Vessel 482 hazardous waste storage tank was closed and it is no longer a permitted unit.

g) On September 17, 1997, the Facility's ownership changed from Shell Oil Company – Martinez Manufacturing Complex to Shell Martinez Refining Company.

h) Effective July 1, 1998, Equilon Enterprises LLC became owner and operator of the Shell Martinez Refining Company, which was renamed "Martinez Refining Company, a Division of Equilon Enterprises LLC". On

June 15, 2000, Shell Oil Company 1) submitted a revised Part B Application that changed the name of the Facility and operator from Shell Martinez Refining Company to Martinez Refining Company, a Division of Equilon Enterprises LLC; 2) revised the waste analysis plan to reflect only treatment of non-hazardous wastewaters in the biotreater unit (ETP-1) ; and 3) revised the operating log and inspection requirements of the biotreater unit because hazardous wastes were no longer treated in this unit.

i) On June 14, 2002 Martinez Refining Company changed its name to Shell Oil Products US, Martinez Refinery.

j) On August 21, 2003 DTSC approved a Class 2 permit modification to allow: 1) the delayed closure of the Effluent Treatment Plant No. 1 (ETP-1, aka: biotreater); and 2) the biotreater unit to handle non-hazardous waste streams only.

k) On February 28, 2005, Shell submitted its Part “A” application for its permit renewal and on March 1, 2005 Shell submitted its Part “B” Application, which was revised in June 2007.

7. FACILITY SIZE AND TYPE FOR FEE PURPOSES:

The Facility is categorized as a small treatment facility for the purpose of assessing fees in accordance with Health and Safety Code section 25205.1 and for purposes of Health and Safety Code sections 25205.2 and 25205.19. The Facility treats hazardous waste at treatment capacity of about 90 tons per month. The Facility has a Tank that stores about 200 tons of hazardous waste.

PART III. GENERAL CONDITIONS

1. PERMIT APPLICATION DOCUMENTS:

The Part "A" Application dated February 28, 2005 and the Part "B" Application, Volumes I, II, and III, submitted on March 1, 2005 and subsequently revised in June 2007 and titled Part B Application, Shell Oil Products US, Martinez Refinery are hereby made a part of this Permit by reference. The following documents are made part of the Part "B" Application:

a. Part B Application, Shell Oil Products US, Martinez Refinery, 3485 Pacheco Boulevard, Martinez, California 94553, Originally Submitted – March 2005, Last Revision – June 2007, Volume 1
b. Part B Application, Shell Oil Products US, Martinez Refinery, 3485 Pacheco Boulevard, Martinez, California 94553, Originally Submitted – March 2005, Last Revision – June 2007, Volume 2
c. Part B Application, Shell Oil Products US, Martinez Refinery, 3485 Pacheco Boulevard, Martinez, California 94553, Originally Submitted – March 2005, Last Revision – June 2007, Volume 3
d. Trial Burn Report for CO Boiler No. 2, Condition 3 Retest, Final Report, ENSR Corporation, March 2007
e. Trial Burn DRE Retest Plan for CO Boiler No. 2, ENSR Corporation, September 2006
f. Trial Burn Report for CO Boiler No. 2, Volume I of II, Final Report, ENSR Corporation, September 2006
g. Trial Burn Report for CO Boiler No. 2, Volume II of II, Final Report, ENSR Corporation, September 2006
h. Trial Burn Plan for CO Boiler Units 1, 2, and 3, Revision 2, ENSR Corporation, November 2005, Shell Oil Products US, Shell Martinez Refinery, Martinez, California, CAD 009164021.
i. Health Risk Assessment for the CO Boilers at the Shell Martinez Refinery, Martinez, California, ENSR Corporation, October 2006
j. Protocol for the CO Boiler Health Risk Assessment, Revision 1, November 2005 (revised from April 2005)
k. Seismic Assessment of the CO Boilers and Tank T-12038 at the Shell Martinez Refinery, March 2007
l. Geotechnical Report in Support of Seismic Assessment, Hazardous Waste Facility, Part B Permit Renewal CO Boilers and Bio Treater Tank 12038, Shell Martinez Refinery, Martinez, California, August 30, 2006

2. EFFECT OF PERMIT

(a) The Permittee shall comply with the terms and conditions of this Permit and the provisions of the Health and Safety Code and California Code of Regulations, title 22, division 4.5. The issuance of this Permit by DTSC

does not release the Permittee from any liability or duty imposed by federal or state statutes or regulations or local ordinances, except the obligation to obtain this Permit. The Permittee shall obtain the permits required by other governmental agencies, including but not limited to, those required by the applicable land use planning, zoning, hazardous waste, air quality, water quality, and solid waste management laws for the construction and/or operation of the Facility.

(b) The Permittee is permitted to treat and store hazardous wastes in accordance with the terms and conditions of this Permit. Any management of hazardous wastes not specifically authorized in this Permit is strictly prohibited.

(c) Compliance with the terms and conditions of this Permit does not constitute a defense to any action brought under any other law governing protection of public health or the environment, including, but not limited to, one brought for any imminent and substantial endangerment to human health or the environment.

(d) DTSC's issuance of this Permit does not prevent DTSC from adopting or amending regulations that impose additional or more stringent requirements than those in existence at the time this Permit is issued and does not prevent the enforcement of these requirements against the Permittee.

(e) Failure to comply with any term or condition set forth in the Permit in the time or manner specified herein will subject the Permittee to possible enforcement action including but not limited to penalties pursuant to Health and Safety Code section 25187.

(f) Failure to submit any information required in connection with the Permit, or falsification and/or misrepresentation of any submitted information, is grounds for revocation of this Permit (Cal. Code Regs., tit. 22, §66270.43).

(g) In case of conflicts between the Operation Plan and the Permit, the Permit conditions take precedence.

(h) This Permit includes and incorporates by reference any conditions of waste discharge requirements issued to the Facility by the State Water Resources Control Board or any of the California Regional Water Quality Control Boards and any conditions imposed pursuant to section 13227 of the Water Code.

3. <u>COMPLIANCE WITH THE CALIFORNIA ENVIRONMENTAL QUALITY ACT (CEQA)</u>

DTSC has prepared an Initial Study and Negative Declaration for this permit renewal project in accordance with the requirements of Public Resources Code section 21000 et seq. and the CEQA Guidelines, section 15070 et seq. of California Code of Regulations, title 14.

4. ANNUAL WASTE MINIMIZATION REDUCTION AND MINIMIZATION CERTIFICATION

The Permittee shall certify annually that it has a hazardous waste reduction and minimization program and method in place and shall keep the annual certification as part of its Operating Record in accordance with California Code of Regulations, title 22, section 66264.73(b)(9).

5. ACCESS

a) DTSC, its contractors, employees, agents, and/or any United State Environmental Protection Agency representatives are authorized to enter and freely move about the Facility for the purposes of interviewing Facility personnel and contractors; inspecting records, operating logs, and contracts relating to the Facility; reviewing progress of the Permittee in carrying out the terms of Part VI of the Permit; conducting such testing, sampling, or monitoring as DTSC deems necessary; using a camera, sound recording, or other documentary-type equipment; verifying the reports and data submitted to DTSC by the Permittee; or confirming any other aspect of compliance with this Permit, Health and Safety Code, division 20, chapter 6.5, and California Code of Regulations, title 22, division 4.5. The Permittee shall provide DTSC and its representatives access at all reasonable times to the Facility and any other property to which access is required for implementation of any provision of this Permit, Health and Safety Code, division 20, chapter 6.5, and California Code of Regulations, title 22, division 4.5, and shall allow such persons to inspect and copy all records, files, photographs, documents, including all sampling and monitoring data, that pertain to work undertaken pursuant to the entire Permit or undertake any other activity necessary to determine compliance with applicable requirements.

b) Nothing in this Permit shall limit or otherwise affect DTSC's right to access and entry pursuant to any applicable State or federal laws and regulations.

PART IV. PERMITTED UNITS AND ACTIVITIES

This Permit authorizes operation only of the Facility units and activities listed below. The Permittee shall not treat, store or otherwise manage hazardous waste in any unit other than those specified in this Part IV. Any modifications to a unit or activity authorized by this Permit require the written approval of DTSC in accordance with the permit modification procedures set forth in California Code of Regulations, title 22, division 4.5.

UNIT #1 - TANK 12038**:**

LOCATION: This tank is located in the refinery's Effluent Treatment Plant area, north-west of the Marina Vista.

ACTIVITY TYPE: Storage of waste biosolids and Dissolved Nitrogen Flotation (DNF) Float. The mixture of biosolids and DNF Float is called biosludge.

ACTIVITY DESCRIPTION:

This tank is used to store the hazardous waste liquid stream that is fed to the CO boilers (Figure 2). The process flow diagram for this permitted unit is provided in Figure 5 of this Permit.

PHYSICAL DESCRIPTION:

Tank 12038 is an aboveground tank made of carbon steel with a phenolic coating. It is a double wall and double bottom tank with a cone roof. The tank is 20 feet in diameter and 20 feet high, has a capacity of 47,754 gallons, and is nitrogen-blanketed. The interior wall and bottom of the Tank 12038 primary shell is lined with a cross-linked epoxy-phenolic coating. The tank was built according to American Petroleum Institute (API) 650 Standard. The secondary shell serves as the secondary containment for the tank. The interstitial space between the two shells is equipped with a pressure/vacuum relief valve. The interstitial space is equipped with leak detectors and a continuous monitor to detect leaks from the primary tank with alarms in the Effluent Treatment Plant control center. Tank 12038 is equipped with an overfill prevention system.

MAXIMUM CAPACITY: 47,750 gallons.

WASTE TYPE: See Table 1 for detailed description.

Waste Stream #1 – Dissolved nitrogen flotation (DNF) solids (DAF Float)
Waste Stream #2 – Waste biosludge
Waste Stream #3 – Waste biosolids

WASTE SOURCES: See Table 1 for a detailed description.

RCRA HAZARDOUS WASTE CODES: See Table 1 for detailed description.

CALIFORNIA HAZARDOUS WASTE CODES: See Table 1 for detailed description.

UNIT SPECIFIC CONDITIONS:

1. The Permittee shall manage hazardous waste in Tank 12038 in accordance with the requirements of the California Code of Regulations, title 22, sections 66264.190 to 66264.199.

2. Tank System Design

   a. The Permittee shall maintain the secondary containment system in accordance with the detailed design plans and descriptions contained in the Approved Part B.

   b. To ensure sufficient shell strength, the Permittee shall maintain the shell thickness specified in the approved Part B for Tank 12038.

3. Operating Requirements

   a. The Permittee shall not place treatment reagents in the tank system except for flow improvers to enhance pumpability and odor suppressors to control hydrogen sulfide.

   b. The Permittee shall prevent spills and overflows from the tank or containment systems using the methods described in the Approved Part B.

4. Inspection Schedules and Procedures

   a. The Permittee shall inspect the tank systems in accordance with the Approved Part B and shall document such inspection in the Facility operating record.

   b. The Permittee shall assess the condition of the tank according to the schedule and procedures provided in the Approved Part B.

5. Response to Leaks or Spills

   In the event of a leak or a spill from the tank system, from a secondary containment system, or if a system becomes unfit for continued use, the Permittee shall follow the procedures specified in the Approved Part B and

the notification and reporting requirements under California Code of Regulations, title 22, section 66264.196(b)(5).

6. Closure

At closure of the tank systems, the Permittee shall follow the procedures in the Approved Part B.

AIR EMISSION STANDARDS:

Tank 12038 is subject to the California Code of Regulations, title 22, chapter 14, article 28.5 Air Emission Standards for Tanks, Surface Impoundments, and Containers.

TABLE 1: PERMITTED WASTE STREAMS

Stream Number	Waste Stream Description	EPA Waste Code No.	California Waste Code No.*
1	Dissolved Nitrogen flotation (DNF) solids	K048	222
2	Waste Biosludge	K048	222
3	Waste Biosolids	Not applicable	Not applicable

Note: Waste Biosolids are not classified as hazardous waste under federal and State laws and regulations.

UNIT # 2 - CARBON MONOXIDE BOILERS (CO Boiler 1, 2, and 3):

LOCATION: These boilers are located within the Utilities Plant located in the central part of the Facility.

ACTIVITY TYPE: Treatment of DNF solids, waste biosolids, and waste biosludge.

ACTIVITY DESCRIPTION:

The CO Boilers burn DNF solids, hazardous waste biosludge, non-hazardous waste biosolids and fuels. CO Boilers generate steam that is used to operate the refinery. These boilers operate on multiple feeds with the primary fuel being a process gas called catalytic cracker unit regenerator off-gas (Figure 3). Other fuels include Flexicoker gas, refinery fuel gas, and biosludge. Biosludge is the mixture of dissolved nitrogen flotation (DNF) float and waste biosolids. The Permittee uses nitrogen as opposed to air in its dissolved flotation units. A process flow diagram for this permitted unit is shown in Figure 6 of this Permit.

PHYSICAL DESCRIPTION:

Each CO Boiler system consists of the following components: firebox, draft fan, flue gas duct, the electrostatic precipitator (ESP), urea injection system, conveyor, dust hopper, sling bag, the stack and pumps. Each boiler is 90 feet in diameter and 220 feet high.

The firebox is made of carbon steel and is 12.9 ft high. It has four fuel burners, dual-fluid type. Draft fans are designed to provide at a flow rate of 105,000 actual cubic feet per minutes and a discharge pressure of 15 inches water column. The flue gas duct is made of carbon steel lined with refractory. Electrostatic Precipitators (SP-75, SP-76, SP-77) are plate and wire type. The urea injection system is comprised of a 54,000-gallon tank and a pump to provide a flow of 5 to 180 gallons per hour. The conveyor is a screw type. There are eight dust hoppers per boiler. The stack is constructed of carbon steel and has an outer diameter of 8 feet.

MAXIMUM CAPACITY:

Biosludge Flow	12.07	gallons per minute (gpm)	hourly rolling average (HRA)	For each CO Boiler
Biosludge Flow	30	gpm	hourly rolling average (HRA)	For all 3 CO Boilers combined

WASTE TYPES: See Table 1 for details.

Waste Stream #1 – Dissolved nitrogen flotation (DNF) solids (DAF Float)

Waste Stream #2 – Waste biosludge
Waste Stream #3 – Waste biosolids

WASTE SOURCE: See Table 1 for details.

In addition to the wastestreams shown in Table 1, the CO Boilers burn the following refinery process streams, which are not regulated by this Permit:

1. Catalytic Cracker Unit Regenerator Off-gas
2. Flexicoker gas
3. Fuel gas

RCRA HAZARDOUS WASTE CODES: See Table 1.

CALIFORNIA HAZARDOUS WASTE CODES: See Table 1.

UNIT SPECIFIC CONDITIONS:

1. Identification Criteria for Permitted and Prohibited Waste

   a. The Permittee may incinerate waste streams in Table 1 only if they meet the following criteria:

      (1) The average ash content of the biosludge on wet basis shall be no greater than 13.5% by weight measured on an annual basis.

      (2) The average total chloride and total chlorine content of the wastes shall be no greater than 1% by weight measured on an annual basis.

      (3) Table 1 wastes shall always be fed in conjunction with auxiliary fuel.

   b. Throughout operation, the Permittee shall conduct analyses in accordance with Part V.3 of this Permit to ensure that the criteria above are met.

   c. Residue generated from burning of Table 1 wastes in the CO Boilers shall be managed as hazardous waste according to California Code of Regulations, title 22.

2. Instrumentation and Operational Performance Requirements

   a. The Permittee shall maintain the CO Boilers so that when operated, in accordance with the operating requirements specified in this Permit, they will meet the following performance standards:

(1) Each CO Boiler shall achieve a destruction and removal efficiency (DRE) of 99.99 percent for the principal organic hazardous constituents (POHCs) for waste feed streams. The DRE value shall be determined using the method specified in California Code of Regulations, title 22, section 66264.343. Monochlorobenzene shall be identified as POHC for DNF Float.

(2) The Permittee shall control hydrogen chloride (HCl) and chlorine (Cl_2) emissions, so that the rate of emissions from all CO Boilers is no greater than 18.3 g/s for HCl and 1.05 g/s for Cl_2.

(3) The CO Boilers shall not emit particulate matter in excess of 0.08 grains per dry standard cubic foot after correction to a stack gas concentration of seven percent (7%) oxygen, using procedures prescribed in Title 40, Code of Federal Regulations (40 CFR) Part 60, Appendix A, methods 1 through 5; and Appendix IX of Chapter 16, California Code of Regulations, title 22.

(4) The Permittee shall control the emissions of dioxins and furans so that the ratio of the predicted maximum annual average ground level concentration (based on the combined emissions from all three boilers) of 2,3,7,8-TCDD equivalents to the risk-specific dose for 2,3,7,8-TCDD provided in Appendix V of Chapter 16, California Code of Regulations, title 22 shall not exceed 1.0.

(5) The mass emission rates of toxic metals from each CO Boiler shall not exceed the following limits:

Metal	Emission Rate (g/s)	Metal	Emission Rate (g/s)
Antimony	7.60×10^{-2}	Chromium	6.00×10^{-4}
Arsenic	6.77×10^{-5}	Lead	7.40×10^{-2}
Barium	6.00×10^{-1}	Mercury	5.60×10^{-2}
Beryllium	6.77×10^{-5}	Silver	5.10×10^{-1}
Cadmium	4.60×10^{-4}	Thallium	7.60×10^{-2}

b. The Permittee shall feed wastes to the CO Boilers only under the following conditions:

(1) WASTE LIQUID FEED RATE –

Waste shall only be fed in the firebox through the liquid waste burners at the following limits:

i. An average waste liquid feed rate of 12.07 gallons per minute (gpm) as measured on an hourly rolling average basis shall not be exceeded for each CO boiler.

ii. A maximum waste liquid feed rate (bio-sludge) of 30 gpm, measured on an hourly rolling average shall not be exceeded for all three CO Boilers combined.

(2) STACK GAS CO – The stack gas concentration of carbon monoxide (CO) shall not exceed 100 parts per million by volume (ppmv) measured on an hourly rolling average basis (i.e., over any 60 minute period), continuously corrected to seven percent (7%) oxygen, dry gas basis.

(3) FIREBOX TEMPERATURE – The firebox temperature shall be at or above 1599 ^{o}F measured on an instantaneous basis.

(4) COMBUSTION GAS FLOW RATE – The combustion gas flow rate shall be no greater than 154,400 standard cubic feet per minute (scfm) measured on an instantaneous basis.

(5) FIREBOX PRESSURE – The firebox pressure shall be maintained at a positive pressure not to exceed 5.91 inches water column (w.c.) measured on an hourly rolling average basis.

(6) DIFFERENTIAL ATOMIZATION FLUID PRESSURE BETWEEN ATOMIZING FLUID AND THE WASTE FEED - The differential atomization fluid pressure between atomizing fluid and the waste feed shall be no less than 50.0 pounds per squared inch gauge (psig) measured on an instantaneous basis.

(7) ESP POWER - The power to the electrostatic precipitator (ESP) for each boiler shall be maintained at no less than 31.2 kilovolt ampere (kVA) measured on an instantaneous basis.

c. To ensure compliance with the performance standards, DTSC may require modifications or revocation and re-issuance of the permit pursuant to California Code of Regulations, title 22, section 66270.41.

3. Inspection and Monitoring Requirements

   a. The Permittee shall follow the procedures for inspecting the CO Boilers and associated equipment in accordance with the Approved Part B.

   b. The Permittee shall ensure proper operation of all monitoring devices by following the inspection, maintenance, and calibration procedures contained in the Approved Part B.

   c. The Permittee shall ensure that strip charts or other instruments are legible and instrument readings are clearly visible. The strip chart scale must be wide enough to avoid off-scale readings for determining compliance with specified permit limits.

   d. Upon request of DTSC, the Permittee shall perform sampling and analysis of the waste and exhaust emissions to verify that the operating requirements established in this Permit achieve the performance standards.

4. Waste Feed Cutoff Requirements

   a. The Permittee shall maintain the Automatic Waste Feed Cut-off (AWFCO) system to automatically cut off the hazardous waste feed to the CO Boilers at the limits specified in Table 2 of this permit.

      (1) Hazardous wastes shall be fed to the CO Boilers only when all instruments required by this condition are on line and operating properly.

      (2) At a minimum, equipment shall be maintained and tested at the frequencies stipulated in Table 2 of this permit. Testing of the AWFCO shall be conducted according to the operating procedures in the Approved Part B.

   b. In the event that the AWFCO is triggered, the Permittee shall comply with the following:

      (1) Confirm hazardous waste feed is shut off.

      (2) Maintain the minimum firebox temperature while hazardous waste remains in the combustion chamber,

(3) Continue to route exhaust gas to the air pollution control system operated in accordance with this Permit while hazardous waste remains in the combustion chamber, and

(4) Continue to monitor the operating parameters and do not restart the hazardous waste feed until the levels of those parameters comply with the limits specified in Table 2 of this Permit.

c. In case of a malfunction of the AWFCO system, the Permittee shall immediately cease feeding hazardous waste to that CO Boiler. The Permittee shall not restart the hazardous waste feed into the CO Boiler until the problem causing the malfunction has been located and corrected.

d. The Permittee may temporarily deactivate the waste feed cutoff system for only the Carbon Monoxide and Oxygen analyzers while continuing to feed waste to a CO boiler only as necessary while the analyzers are being calibrated. The operating record shall contain the time a cut-off is deactivated and the time when the analyzers are reactivated along with the identification of the person(s) taking the action. The Permittee shall follow the procedures described in the Approved Part B Application in conducting and documenting the deactivation and reactivation of the AWFCO system.

e. The Permittee may temporarily bypass the AWFCO to change the thermocouple selector switch setting to verify firebox temperature. The procedures described in the approved Part B shall be followed in conducting and documenting the bypass/reactivation of the AWFCO.

f. The Permittee shall record in the operating record the date and time of all AWFCO's, including the triggering parameters, reason for the cut-off, and corrective actions taken. The Permittee shall also record all failures of the AWFCO system to function properly and corrective actions taken.

5. Trial Burn:

a. The Permittee shall conduct a trial burn pursuant to a DTSC-approved trial burn plan and requirements specified in California Code of Regulations, title 22, section, 66266.102 (e)(6)(D), to demonstrate conformance with the standards specified in California Code of Regulations, title 22, sections 66266.104 through 66266.107. At least twenty four (24) months prior to the expiration of the Permit, the Permittee shall submit to DTSC for review and approval a trial burn plan as required under California Code of Regulations, title 22, section 66270.66 (c).

The principal organic hazardous constituent (POHC) as defined in California Code of Regulations, title 22, section 66266.104 (a)(2) for which DRE (destruction and removal efficiency) shall be determined for the CO Boilers shall be monochlorobenzene. Additional or different POHCs may be selected if DTSC determines it is appropriate to do so.

b. The Permittee shall complete a trial burn for CO Boiler No. 1 or 3 within nine (9) months after DTSC's approval of the trial burn plan pursuant to section 5.a. above. A trial burn shall consist of one or more operating modes that the Permittee determines essential to operate under and shall demonstrate compliance over the full range of desired operating modes. A minimum of three (3) valid test runs shall be conducted at each operating mode and shall demonstrate compliance with the performance standards for CO Boiler No. 1 or 3 (whichever is the subject of the trial burn) specified in Table 2 of this Permit and any other applicable standards promulgated in statutes or regulations.

c. All data collected during any trial burn shall be submitted to DTSC following completion of the trial burn. The Permittee shall submit to DTSC a certification that the trial burn has been carried out in accordance with the approved trial burn plan, and shall submit the results of all the determinations as required in California Code of Regulations, title 22, sections 66270.66(c - f). This submission shall be made within ninety (90) days of completion of the trial burn. All submissions shall be certified on behalf of the Permittee by the signature of the person authorized to sign a permit application or a report under California Code of Regulations, title 22, section 66270.

6. Closure

The Permittee must follow the procedures in the Closure Plan in the Approved Part B Application for closure of the CO Boilers.

7. Recordkeeping

The Permittee shall record and maintain, in the operating record, all monitoring and inspection data compiled for the CO Boilers.

8. Risk Assessment

At any time during the life of this Permit, DTSC may require that the risk assessments be updated in order to incorporate new DTSC or USEPA standards, guidance, and/or to evaluate new emission rates measured as a result of a new trial burn.

TABLE 2: CO BOILERS AUTOMATIC WASTE FEED CUTOFF LIMITS

Parameter	Cut-off Limits	Measuring Basis	Test frequency
Bio-sludge Flow	Greater than 12.07 gpm	Hourly rolling average (HRA) for each CO Boiler	Monthly
Bio-sludge Flow	Greater than 30 gpm	HRA for three CO Boilers combined	None
Stack Gas CO	Greater than 100 ppmv, corrected to 7% oxygen	HRA	Monthly
Firebox Temperature	Less than 1599 °F	Instantaneous	Monthly
Firebox Pressure	Greater than 5.91 inch w.c.	HRA	Monthly
Combustion Gas Flow Rate	Greater than 154,400 scfm (calculated).	Instantaneous	Monthly
ESP Power	Less than 31.2 kVA	Instantaneous	Monthly
All of the above	If any instrument required for automatic waste feed cut-off is not operational, or if instrumental span is exceeded	None	None

PART V. SPECIAL CONDITIONS

1. The Permittee shall not receive any offsite waste for treatment, storage, or disposal, unless otherwise approved by DTSC.

2. The Permittee shall only receive, store or treat hazardous waste specified in Table 1. The Permittee shall not treat, store or otherwise manage hazardous waste in any unit other than the two (2) regulated units specified in Part IV of this Permit.

3. The Permittee shall follow the waste analysis procedures described in the Approved Part B.

4. The Permittee shall verify the analysis of each waste liquid waste feed stream annually as part of its quality assurance program, in accordance with Test Methods for Evaluating Solid Waste: Physical/Chemical Methods, EPA publication SW-846, or equivalent methods approved by DTSC. At a minimum, the Permittee shall maintain proper functional instruments, use approved sampling and analytical methods, verify the validity of sampling and analytical procedures, and perform correct calculations. If the Permittee uses a contract laboratory to perform analyses, then the Permittee shall inform the laboratory in writing that it must operate under the waste analysis conditions set forth in this permit.

5. Special Conditions That Apply to the Effluent Treatment Plant No. 1 (ETP-1 Biotreater):

   a. The Permittee shall not accept, store, treat or otherwise manage hazardous waste in the ETP-1 Biotreater.

   b. The Permittee shall continue groundwater monitoring for the ETP-1 Biotreater pursuant to the San Francisco Bay Regional Water Quality Control Board (RWQCB) Order 95-234 and any amendments, modifications or successors to that order.

   c. The Permittee shall continue to submit “The Groundwater Boundary Control Capture Verification Modeling Report” to DTSC. This report shall include a section that summarizes the activities that took place during the year as a result of recommendations made in the prior year’s report.

   d. The Permittee shall notify DTSC in writing at least one hundred and eighty (180) days prior to the date on which the Permittee expects to begin closure of the ETP-1 Biotreater. Within ninety (90) days after receiving a notification, DTSC may review the closure plan to determine whether any factor has significantly changed since a prior review was undertaken, or determine whether the plan is otherwise adequate or inadequate, and may prescribe additional requirements or request modification to the plan. Permittee shall

complete closure of this unit, in accordance with the closure plan in the Approved Part B Application, within one hundred and eighty (180) days after the unit ceases to operate. The Permittee shall submit the closure certification report for this unit to DTSC within sixty (60) days of completion of closure.

PART VI. CORRECTIVE ACTION FOR SOLID WASTE MANAGEMENT UNITS

1. The Permittee is conducting corrective action at the Facility under the oversight of San Francisco Bay Regional Water Quality Control Board (RWQCB), Order 95-234 (including any modifications) as approved by the RWQCB in 1995. Under SB 1082 (Calderon 1993), the RWQCB has been designated as the lead agency to oversee corrective action at the Facility except for the areas at Tank 12038, the three CO Boilers, and ETP-1 where no corrective action is required Tank 12038 is identified as SWMU 4.47, and the CO Boilers SWMUs 4.49 through 4.52.

2. In the event the Permittee identifies an immediate or potential threat to human health and/or the environment, discovers new releases of hazardous waste and/or hazardous constituents, or discovers new Solid Waste Management Units (SWMUs) not previously identified, the Permittee shall notify DTSC and the RWQCB orally with twenty-four (24) hours of discovery and notify DTSC in writing within ten (10) days of such discovery summarizing the findings including the immediacy and magnitude of any potential threat to human health and/or the environment.

3. DTSC may require the Permittee to investigate, mitigate and/or take other applicable action to address any immediate or potential threats to human health and/or the environment and newly identified releases of hazardous waste and/or hazardous constituents. For newly identified SWMUs, the Permittee is required to conduct corrective action. Corrective action will be carried out either under a Corrective Action Consent Agreement or Unilateral Corrective Action Order pursuant to Health and Safety Code, Section 25187.

4. To the extent that work being performed pursuant to Part VI of this Permit must be done on property not owned or controlled by the Permittee, the Permittee shall use its best efforts to obtain access agreements necessary to complete work required by this Part of the Permit from the present owner(s) of such property within 30 days of approval of any workplan for which access is required. "Best efforts" as used in this paragraph shall include, at a minimum, a certified letter from the Permittee to the present owner(s) of such property requesting access agreement(s) to allow the Permittee and DTSC and its authorized representatives access to such property and the payment of reasonable sums of money in consideration of granting access. The Permittee shall provide DTSC with a copy of any access agreement(s). In the event that agreements for the access are not obtained within 30 days of approval of any workplan for which access is required, or of the date that the need for access becomes known to the Permittee, the Permittee shall notify DTSC in writing within 14 days thereafter regarding both efforts undertaken to obtain access and its failure to obtain such agreements. In the event DTSC obtains access, the Permittee shall undertake approved work on such property. If there is any conflict between this permit

condition on access and the access requirements in any agreement entered into between DTSC and the Permittee, this permit condition on access shall govern.

5. Nothing in Part VI of this Permit shall be construed to limit or otherwise affect the Permittee's liability and obligation to perform corrective action including corrective action beyond the facility boundary, notwithstanding the lack of access. DTSC may determine that additional on-site measures must be taken to address releases beyond the Facility boundary if access to off-site areas cannot be obtained.

Appendix 1. List of Parcel Numbers of the Entire Site.

Shell Oil Products US
Shell Martinez Refinery
Property List
Area Code 94553

No	1995 Boundary Study Item No.	APN Tax Number	Owner Nam	Property Address	City	Attached Complex Acreage CCC County	Attached Complex Acreage Martinez City Limit	Detached Residential Acreage	Other Acreage in Zip Code 94553	Acres Noted on APN
1	49	374-014-009-4	Equilon Enterprises	Scenic Ave	Martinez, CA 9455	0.310				x
2	50	374-031-011-9	Equilon		Martinez, CA	0.300				
3	52	374-031-012-7	Equilon	Arreba St	Martinez, CA	1.340				
4	53	374-032-010-0	Equilon	Brown St	Martinez, CA	0.200				
5	37	374-041-010-9	Equilon	1635 Pacheco Blvd	Martinez, CA	0.230				
6	37	374-041-011-7	Equilon	Arreba St	Martinez, CA	0.920				
7	22 23	378-010-029-7	Equilon Enterprise	10 Mococo Rd	Martinez, CA 94553		95.680			x
8	1 27	378-040-005-1	Equilon Enterprise	Marina Vista	Martinez, CA 94553		135.960			x
9	1	378-072-016-9	Equilon	1915 Shell Ave	Martinez, CA	294.920				x
10	1	378-072-018-5	Equilon		Martinez, CA	34.527				x
11	1	378-072-019-3	Equilon		Martinez, CA	2.020				x
12	32 33	378-080-002-9	Equilon Enterprise	1801 Shell Ave	Martinez, CA 94553	5.620				x
13	62	378-091-004-2	Equilon	1501 Donald Ave	Martinez, CA	0.090				
14	34	378-091-012-5	Equilon	1521 Donald Ave	Martinez, CA	0.550				x
15	---	378-092-002-5	Equilon	1541 Shell Ave	Martinez, CA			0.100		
16	---	378-092-003-3	Equilon	1531 Shell Ave	Martinez, CA			0.100		
17	64	378-092-018-1	Equilon	1540 Donald Ave	Martinez, CA			0.100		
18	63	378-092-021-5	Equilon	1511 Shell Ave	Martinez, CA			0.190		
19	31	378-101-007-3	Equilon	1514 Shell Ave	Martinez, CA	0.690				x
20	31	378-102-003-1	Equilon	2565 Jefferson St	Martinez, CA	0.820				x
21	66	378-103-011-3	Equilon	2505 Pacheco Blvd	Martinez, CA	0.350				x
22	68	378-103-015-4	Equilon	2555 Pacheco Blvd	Martinez, CA	0.737				x
23	69	378-103-016-2	Equilon	2555 Pacheco Blvd	Martinez, CA	0.928				x
24	47 54 55 56 57	378-110-013-0	Equilon Enterprises, LLC	Pacheco Blvd	Martinez, CA 94553	40.920				x
25	47	378-110-014-8	Equilon	2625 Pacheco Blvd	Martinez, CA	0.840				
26	---	378-110-018-9	Equilon Enterprises, LLC	1622 Shell Ave	Martinez, CA 94554	7.438		Purchased from PG&E on 7/11/03		x
27	21	378-121-001-2	Equilon	Howe Rd	Martinez, CA	0.230				x
28	20	378-121-004-6	Equilon	Pacheco Blvd	Martinez, CA	0.130				x
29	59	378-123-009-3	Equilon	Pacheco Blvd	Martinez, CA	2.634				x
30	39	378-130-005-2	Equilon	18 Wygal Dr	Martinez, CA	0.460				x
31	---	378-130-006-0	Equilon	22 Wygal Dr	Martinez, CA	0.460				x
32	---	378-130-019-3	Equilon	3555 Pacheco Blvd	Martinez, CA	3.290				x
33	43 44 45 46 47	378-130-021-9	Equilon Enterprises, LLC	3475 Pacheco Blvd	Martinez, CA 94553	8.255				x
34	14	378-140-006-8	Equilon	Pacheco Blvd	Martinez, CA	97.973				x
35	14	378-140-007-6	Equilon		Martinez, CA	4.900				x
36	15	378-140-011-8	Equilon		Martinez, CA	0.500				x
37	14	378-140-014-2	Equilon	Pacheco Blvd	Martinez, CA	5.930				x
38	4 5 6 7 11	378-140-015-9	Equilon Enterprises, LLC		Martinez, CA 94553	63.560				x
39	11	378-140-016-7	Equilon	Pacheco Blvd	Martinez, CA	13.740				x
40	19	380-210-002-8	Equilon		Martinez, CA	2.020				x
41	18	380-210-004-4	Equilon	Via Planeta	Martinez, CA	8.590				x
42	16	380-240-001-4	Equilon	Pacheco Blvd	Martinez, CA	15.120				x
43	17	380-240-011-3	Equilon	Pacheco Blvd	Martinez, CA	5.470				x
44	See Note 2	161-240-002-6	Equilon Enterprise	Pacheco Blvd Lot near (AT&SP RR) Access	Martinez, CA 94553				1.150	x
45	See Note 2	162-290-015-5	Equilon Enterprise	1175 Muir Rd (Shell Service Station)	Martinez, CA 94553				0.635	x
46	See Note 2	378-010-008-1	Shell Chemical	Marina Vista Ave Shell	Martinez, CA 94553				15.336	x
		Sub Total				627.012	231.640	0.490	17.121	
		Total				858.652				

Note 1. Properties highlighted in **bold red** (items 15, 16, 17, & 18) are isolated from the main complex boundary and have individual addresses

Note 2. Properties highlighted in **bold blue** (No. 44, 45, & 46) are not associated with Shell Martinez Refinery and are not on the 1995 Boundry Study, but are listed as Equilon or Shell Chemical property as of May 2003.

Note 3. 12-10-03 Removed APN 380-240-10-5 after checking American First Title Fast Web page as not owened by Equilon/SOPUS.

Figure 1. Shell Martinez Refinery, Facility Layout

FIGURE 2. PERMITTED UNIT #1 – TANK 12038

FIGURE 3. PERMITTED UNIT #2 – Three CO BOILERS (#1, 2, and 3 counting from right side).

FIGURE 4. ETP-1 BIOTREATER

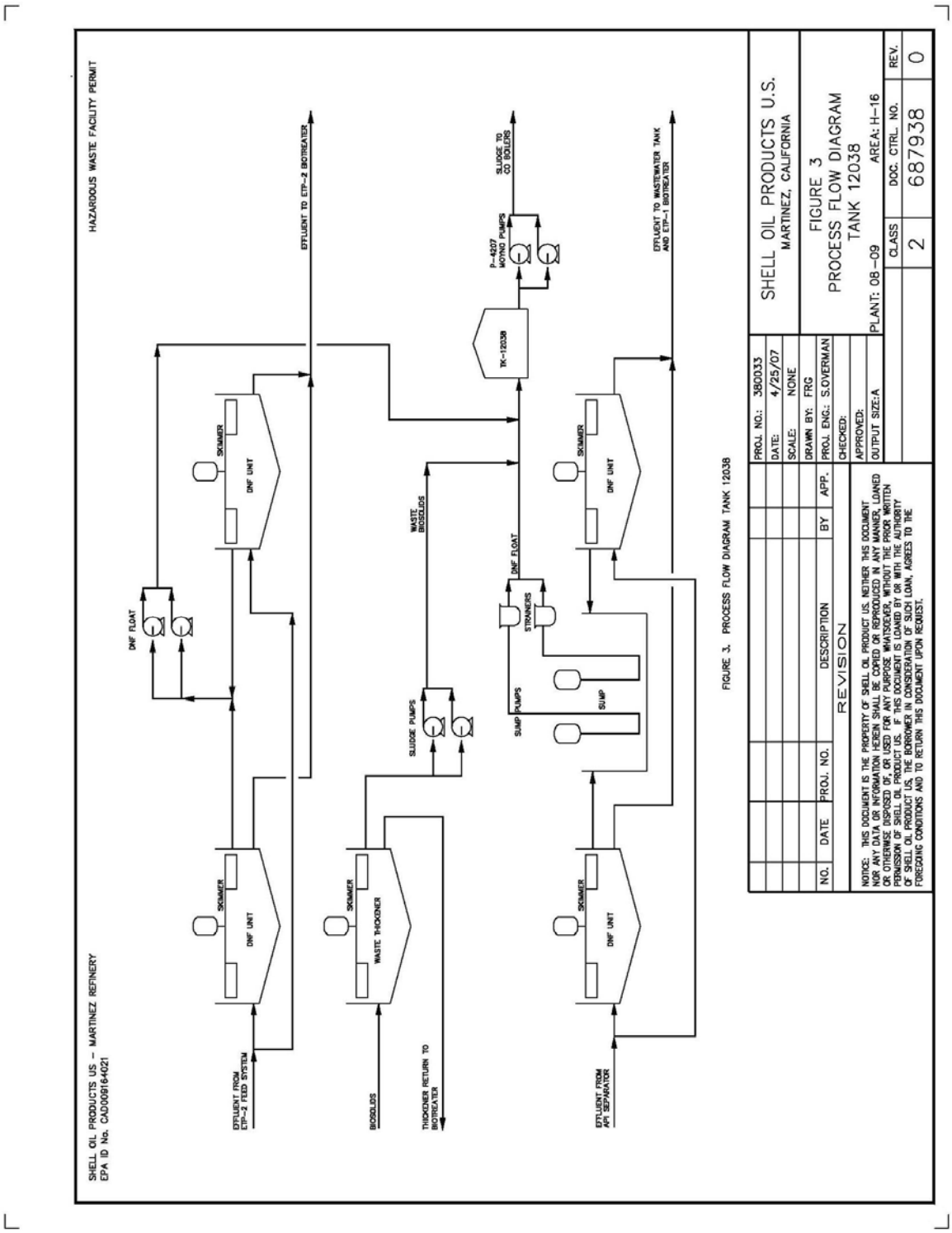

FIGURE 5. PROCESS FLOW DIAGRAM FOR PERMITTED UNIT #1 – TANK 12038

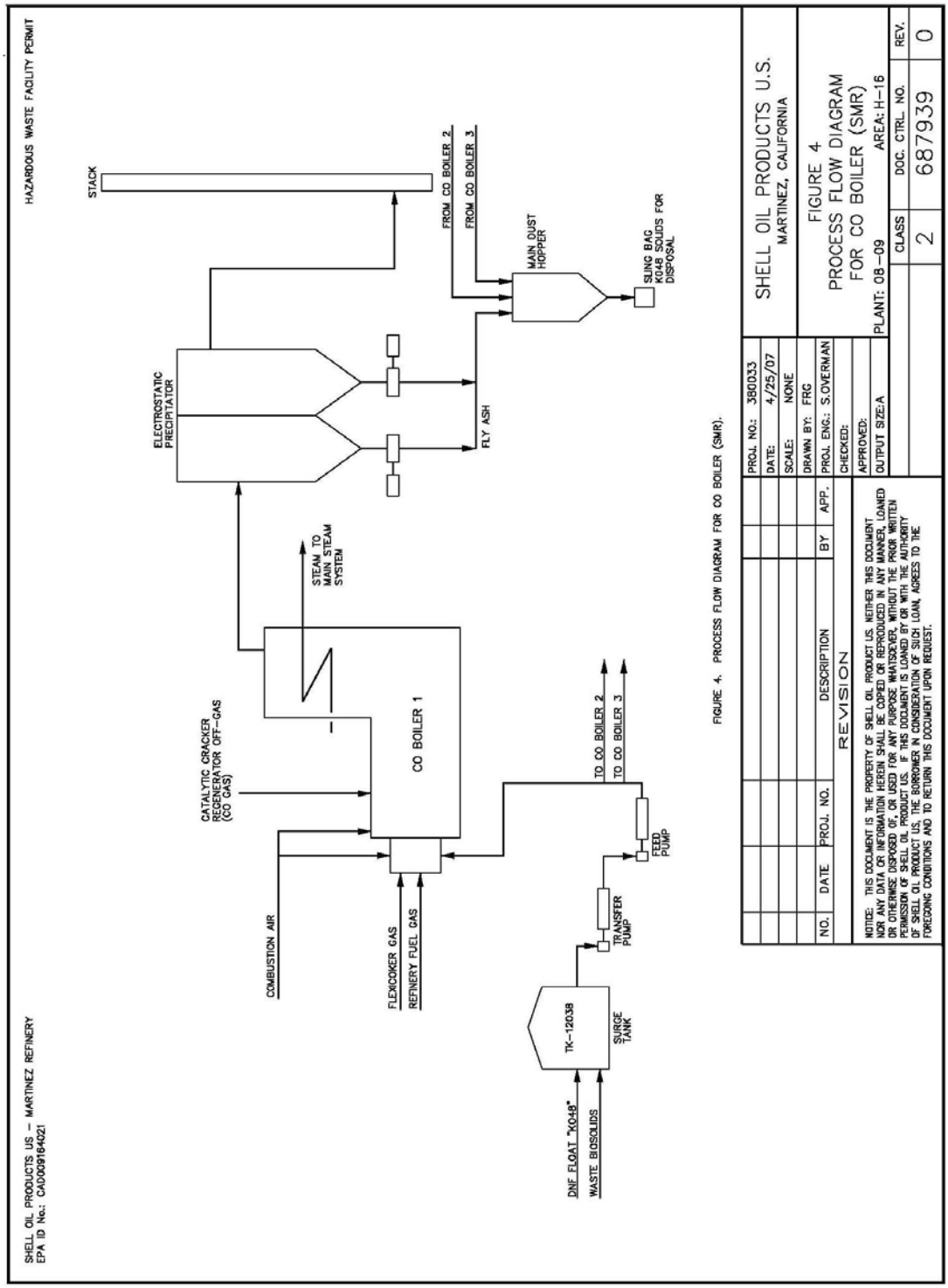

FIGURE 6. PROCESS FLOW DIAGRAM FOR PERMITTED UNIT #2 – CO BOILERS