HYPERGOL IGNITION FOR LIQUID ENGINES

Rocketdyne has been engaged in hypergol ignition research, development, and production programs related to liquid engine systems for the past three years. A hypergol ignition capability has evolved from the experience accummulated and the facilities constructed. The capability is versatile and applicable to all phases of liquid engine hypergol ignition systems.

Some of the programs which have been conducted include: the ignition of a LOX/Hydrocarbon propellant system for which a mixed metal alkyl hypergol igniter was developed, the ignition of a NTO/NH_3 propellant system for which a metallic lithium igniter was developed, the development of a chlorine trifluoride igniter for storable or cryogenic propellant system applications, and the design and development of a multi-start hypergol igniter. A majority of the igniter configurations developed have been incorporated in large engine systems.

The hypergol ignition capabilities include the selection of candidate hypergol materials through literature research and the complete evaluation of these materials with respect to chemical and physical properties, the design of igniter components and hardware configurations, and the integration of the hypergol material and hardware combinations to meet specific requirements for developed engine ignition systems. Facilities are available which accommodate the storage and handling of storable and cryogenic propellants in any desired atmosphere, the compatability studies related to hypergol materials and respective hardware components, the production of developed hypergol igniters, and the surveillance of hypergol materials and igniter assemblies in complete conformance to specification MIL-E-5272. A hypergol ignition delay test stand, with a proven reliability obtained from over three thousand tests, is available for determining ignition delay with an accuracy of $\pm$ 2 milliseconds. The ignition test stand can accommodate both storable and cryogenic propellant combinations and operate at simulated altitude conditions.

Due to the wide scope of the hypergol igniter capability, Rocketdyne is qualified for all phases of research, development, and production efforts pertaining to hypergol ignition for liquid engines.

Ex. 34 - 5243

HYPERGOLIC IGNITERS

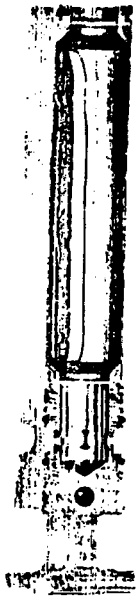

P/N 650575
9 IN^3 TEA*
MAIN THRUST
CHAMBER IGNITER
ATLAS MA-3

P/N 650439
6 IN^3 TEA*
MAIN THRUST
CHAMBER IGNITER
THOR MB3-2

P/N 650566
4 IN^3 TEAB 15/85*
VERNIER ENGINE
IGNITER
ATLAS MA-3 &
THOR MB3-2

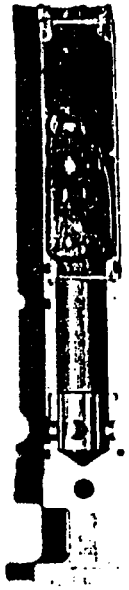

P/N 650818
6 IN^3 TEA*
MAIN THRUST
CHAMBER IGNITION
H-I ENGINES

* TEA - TRIETHYLALUMINUM
* TEAB 15/85 - 15% TRIETHYLALUMINUM
85% TRIETHYL BORANE

1252:7/14/60:S1B

Ex. 34 - 5244

GURICAN
000160

S.P.G.G. TANK PRESSURIZATION

Rocketdyne has been engaged in tank pressurization studies utilizing solid propellant exhaust gases for several years. These studies, which have been accomplished via both company and government funds, have included solid propellant development, grain design and fabrications, coolant design and fabrication, compatibility evaluations, exhaust gas analysis, and system design calculations. Results from these tests were used in the design of the gas generator units for application in the Eagle and Sparrow III missiles as proposed by Rocketdyne.

Initial work in 1953 by the Solid Propellant Group on the NALAR (bi-propellant liquid aircraft rocket) demonstrated the feasibility of utilizing a solid propellant for direct pressure expulsion of the fuel (UDMH). During the last two years, Rocketdyne has established the feasibility of direct oxidizer expulsion (NTO). The combination of these efforts has permitted Rocketdyne to expand its scope along the lines of solid propellant pressurization for small, volume limited missile applications as well as larger booster applications.

Potential applications utilizing actual S.P.G.G. systems are presently being developed and evaluated at Rocketdyne. One task being conducted for the Air Force utilizes an inert gas producing grain for expulsion of storable propellants. Valuable experience as related to specific expulsion requirements, as well as performance of system components, is being acquired through these efforts.

Commercially available Rocketdyne Gas Generator propellants are of the extruded ammonium nitrate-synthetic rubber, composite type. The Bureau of Explosives has classified these propellants as Class "B" under I.C.C. regulations. These propellants are ignited with pyrotechnic materials initiated by electric squibs. Some of the advantages of the Rocketdyne family of Gas Generator propellants are:

- A wide range of burning rates available
- Clean, very smooth burning
- Low flame temperature, as low as 1860°F
- Excellent physical properties from -65°F to +175°F
- Reliable, reproducible performance
- Produced from readily available materials

In addition to utilizing the conventional solid propellants as gas generants, a research program has been proposed to synthesize new compounds or very little known compounds for incorporation into advanced gas generator propellants. Future work is tentatively scheduled for the evaluation of compatibility limits of various conventional and experimental solid propellant gas generants with a majority of the storable liquid propellants. This effort will strengthen the position of Rocketdyne in the field of tank pressurization as well as aiding in the advancement of the state-of-the-art for solid propellant tank pressurization systems.

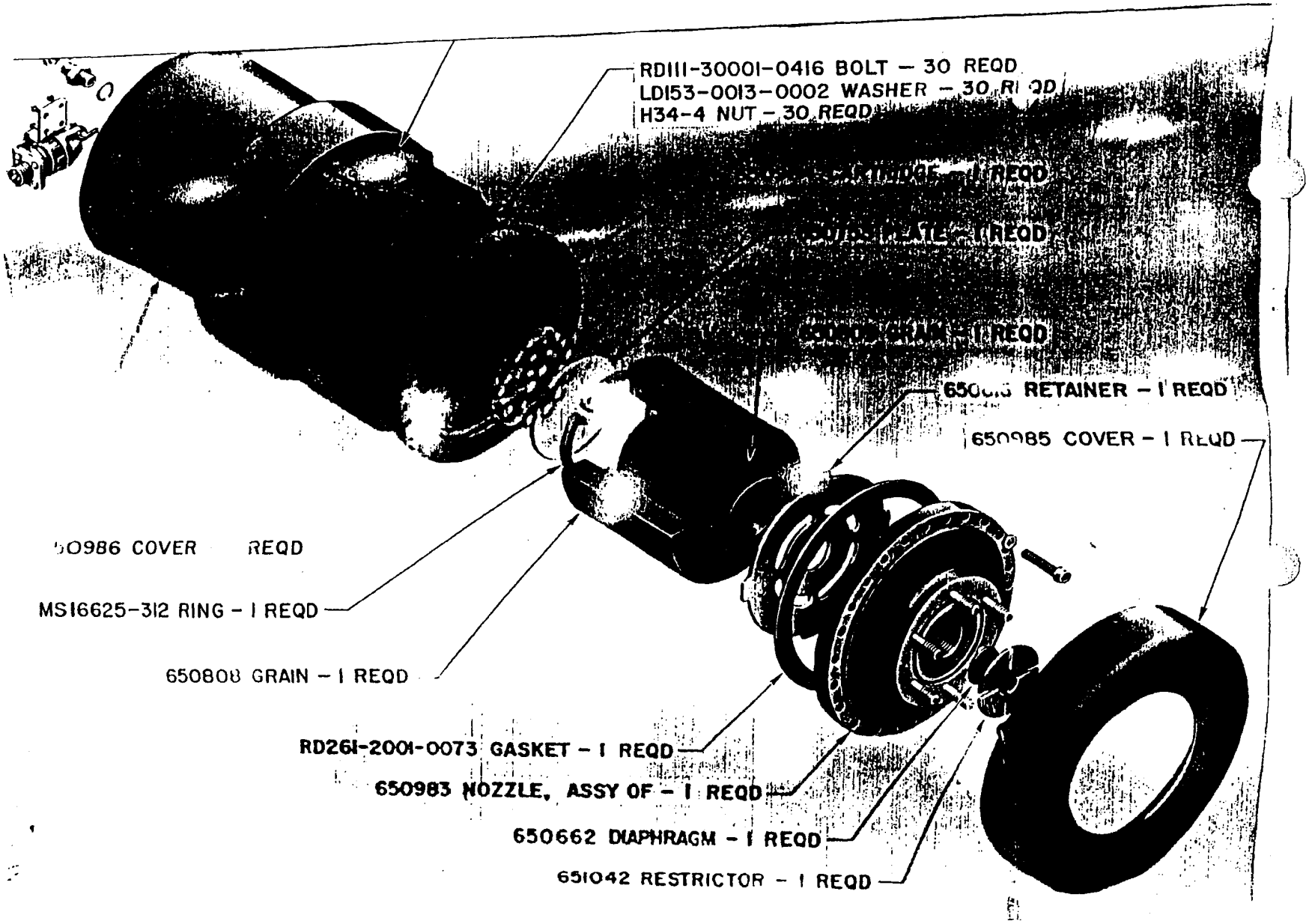
RD111-30001-0416 BOLT – 30 REQD
LD153-0013-0002 WASHER – 30 REQD
H34-4 NUT – 30 REQD
650985 COVER – 1 REQD
MS16625-312 RING – 1 REQD
650808 GRAIN – 1 REQD
RD261-2001-0073 GASKET – 1 REQD
650983 NOZZLE, ASSY OF – 1 REQD
650662 DIAPHRAGM – 1 REQD
651042 RESTRICTOR – 1 REQD

Ex. 34 - 5246

AUXILIARY POWER UNITS

A very specialized application for propellant actuated devices is their use in auxiliary power units (APU). Because of their versatility, APU are equally adaptable for both routine and emergency uses. They are simple, have a large power output per unit weight, and are capable of being stored for long periods under extreme conditions with little or no loss in performance. On command they can be activated instantly, with utmost reliability. It is not even necessary to have an external source of electrical power to actuate them if a percussion type primer is used for initiation. No other type of auxiliary power unit offers all these desirable features.

Duration of power developed by these units may range from milliseconds to multiple minute operation, depending on the application requirements. Power output may range from a fraction of a foot pound per second to hundreds of horsepower. Possible areas for their use are almost unlimited, covering any application where gases generated under pressure can be utilized. Some current applications for auxiliary power units include their use in jet engine starters, JATO, electric generators, airplane landing gear actuators, airplane emergency escape systems, pumping of propellants in liquid rocket engines, aerosol dispensing, oil well drilling, missile control systems, and in the mining and construction industries. The extreme diversity of these uses shows that auxiliary power units can be advantageously employed for both industrial and military applications.

Rocketdyne has worked for several years on the research, development, manufacture, and potential uses for auxiliary power systems. Capabilities are available for igniter and propellant research, development, and manufacture, hardware design and manufacture, and functional and environmental testing. A staff of technical personnel with many years of combined experience in the development of auxiliary power units is available. Production capacity for large volume items is available.

Some of the better known auxiliary power units developed by Rocketdyne which are currently in use are the turbine spinners for large liquid propellant engines and the solid propellant gas generators used on the Tartar and Terrier missiles for attitude control. A recent development has been the design of an igniter-propellant combination for use in the emergency escape system of the North American T-39 airplane. Extensive work has also been done recently on the pumping of liquid propellants in a rocket engine by means of direct pressurization, utilizing the combustion products of a solid propellant gas generator as the source of pressurant gases.

Ex. 34 - 5247

AIRPLANE EMERGENCY ESCAPE SYSTEMS

In general, airplane emergency escape systems are of two types. The more common type is one in which personnel are automatically ejected from the airplane; in the other type, part of the airplane structure is removed to allow personnel to jump clear of the airplane.

The ejection type escape system is usually a fairly complex system in which a series of actions are sequenced. The initial impulse is provided by a cartridge which starts the sequential activity. Some of these occurrences may include mechanisms for unlocking the seat belt, pulling the pilot's legs into the proper position, stowing radar equipment, blowing off the canopy, ejecting the seat, releasing the pilot from the seat, and finally opening his parachute. This may involve a combination which makes use of cable cutters, catapults, thrusters, initiators, explosive bolts, and other types of pyrotechnic devices. Rocketdyne, because of its long experience with the design and manufacture of pyrotechnic devices is well equipped to develop a complete emergency escape system.

In the development of the other type of escape system, i.e., one in which part of the airplane structure is removed to allow personnel to jump, Rocketdyne is also well qualified. During the past year the Special Devices Unit successfully developed the propellant for and ground tested a complete system of this type. This work was accomplished in less than ninety days from receipt of the contract.

CATAPULTS AND THRUSTERS

Catapults are devices which are characterized by the propelling of a relatively heavy mass over a long stroke distance. A typical application, as used in a catapult, for an aircraft ejection seat may propel a mass of 300-400 pounds and have a stroke of 40-60 inches. Acceleration must be kept to the relatively low "G" values which the human body can tolerate. The method of firing is either by mechanical actuation or by gas pressure from a separate source, usually a pyrotechnic initiator.

Thrusters are similar to catapults except that thrusters are characterized by exerting a large force over a relatively short stroke distance. A typical thruster may exert a force of 1000-5000 pounds over a stroke distance of 2-4 inches, usually at a high acceleration. Applications in which thrusters may be used include canopy removal, as an unlocking mechanism, jettisoning, equipment positioning, and any other application where a reliable, rapidly applied high force is needed. Actuation may be mechanical or by gas pressure.

Rocketdyne can "tailor make" catapults or thrusters for any application where the use of these devices would be advantageous. Facilities are available for design, development testing, and production of the necessary propellants and hardware.

CABLE CUTTERS

Cable cutters are cartridge actuated devices which are used for instantly severing lines or cables on command. In operation, the cable is set inside a guillotine-like, cartridge actuated device, which when fired immediately severs the line or cable. Some applications for cable cutters are for severing parachute shroud lines, missile and airplane control cables, and in industry in locations where cables or ropes must be cut quickly and where no other adequate source of power is available. These devices, though they weigh only ounces, are capable of cutting cables which would require massive machinery if cut by conventional means. The reliability of these devices, like most pyrotechnic items, can be made such that probability of a failure is less than one chance in a million.

Rocketdyne, because of its long experience with cartride actuated devices, is in an ideal position to develop both the propellant and the hardware for any application where the use of a cable cutter is indicated.

EXPLOSIVE BOLTS

Explosive bolts are very useful devices for assuring quick, reliable separation of hardware assemblies, either for emergency or for predetermined application. Their uses include missile stage separation, pylon or fuel tank jettisoning, missile cocoon removal, and canopy removal. Bolts can be designed in such a manner that no fragments will be expelled. The material used for the bolt may be any metal, and the tensile loads applied may be 100,000 lbs. or more. In addition, a thruster may be incorporated into the design so that a positive separating force may be exerted on the parts after the bolt has been severed. Breaking of the bolt is accomplished by initiation of an explosive charge inside the bolt. Initiation of the explosive may be accomplished by electrical or mechanical means.

Rocketdyne personnel have had extensive experience in the design, development, and applications of explosive bolts. In addition, Rocketdyne experience with igniters, propellants, and explosives, coupled with their experience in the design and production of hardware for pyrotechnic devices, assures the development of reliable design and high quality for any newly developed explosive bolts. Facilities for development and quality control testing of the bolts are available in the area.

INITIATORS

Initiators are pyrotechnic devices which are ordinarily used to start the ignition of a larger pyrotechnic or explosive charge, or when used alone, to generate a relatively small power output. Their power output is relatively small when compared to the output of thrusters, catapults, or auxiliary power units.

Initiators may be electrically, mechanically, or gas operated, depending on the application required. In general they are used to initiate igniters, pyrotechnics and high explosives. Suggested uses are as igniters for liquid and solid propellant rockets, flares, cartridge actuated devices; in fact, any application where a quick, reliable, instantly available source of hot gases, hot particles, flame or pressure to start a larger pyrotechnic or explosive charge is required.

Rocketdyne is exceptionally well qualified to design, develop, and produce initiators for any application, since they have been making them for many years for every service qualified large liquid propellant rocket engine system in current use. The high order of reliability achieved in the production of the initiators already in use is indicative of the high quality production and inspection standards used in their manufacture. These high standards of control will assure the customer of the same order of high reliability for any pyrotechnic item developed and produced at Rocketdyne.

~~SPECIAL~~ DEVICES PERSONNEL

The following personnel or their equivalents will be associated with the program either in a supervisory capacity or by direct participation.

RESPONSIBLE SUPERVISION

Dr. L. C. Stuckenbruck

Dr. Stuckenbruck received his bachelor of science degree from Jamestown College in 1940 and in 1949 received his doctorate from Iowa State University.

At Lockheed Aircraft Company (1941 to 1942) he was engaged in tool and manufacturing process evaluation. Dr. Stuckenbruck's experience in solid propellants began in 1949 at the Jet Propulsion Laboratory where he was employed as senior research engineer.

He has been with Rocketdyne since 1952, engaged in solid propellant research and development. Projects with which he has been associated include: research on solid propellants, including propellant physical property studies, ignition studies, grain design and propellant development for such rocket engines as the Falcon, Loki and Sergeant; a propellant R & D program in support of the NASA rocket development, experimental work in formulating new propellant systems, investigating new binder systems and surveying additives to improve propellant properties and performance; supervision of the research effort leading to the development of the NASTI rocket, including propellant and motor development and static and field launching tests; supervision of solid propellant igniter research, development and production; and supervision of research in tank pressurization with solid propellant gas generators, hybrid grain development, explosive forming of metal parts, continuous processing of solid propellants and high performance solid propellants.

His present position is Section Chief for the Solid Propulsion Section at the Propulsion Field Laboratory.

Mr. C. H. Martinez

Mr. Martinez graduated from Rensselaer Polytechnic Institute of Troy, New York in 1953. Prior to that, he was a chemist for General Electric (1947 to 1951) where he performed research on carbon brushes as applied to high-altitude aircraft. In 1953 he was employed by the Halliburton Oil Well Cementing Company where he was concerned with the development of an oil well logging device.

Mr. Martinez has been employed by Rocketdyne since 1954 and has worked on the development of squib igniters and solid propellants for NAKA and NASTY rockets. He was instrumental in developing the igniters used on all Rocketdyne engines and has submitted patent disclosures covering formulations, processing of several pyrotechnic mixtures and forming of metals using high velocity techniques.

He is presently Group Scientist of the Special Projects Group. In this position he has directed research and development programs on hybrid rocket systems and grain development, solid propellant temperature sensitivity studies, advanced pressurization systems utilizing solid propellant exhaust gases and explosive forming basic studies and the forming of production parts by explosives.

Mr. Glen D. Artz, Supervisor

Education:

Fresno State College	1946-1950	B.S.-Chemistry

Experience:

Consolidated Mosquito Abatement District	1950-1950 - Chemist
Italian Swiss Colony Wines	1950-1951 - Chemist
U. S. Naval Ordnance Test Station	1951-1956 - Chemist
Rocketdyne	1956-Present - Engineer, Senior Engineer and Supervisor, Research

Conducted research to evaluate new insecticides and to determine new methods of mosquito abatement. Conducted experimental work on wetting agents, detergents and insecticides. Conducted analytical chemistry laboratory to determine chemical composition of high explosives and weapon systems. Supervised chemists on the analysis and quality of raw and finished materials for high explosives. As a quality control and high explosives engineer, conducted experiments to determine new methods for analysing solid propellant ingredients and evaluating end products. Supervised the processing and quality control testing of

Mr. Glen D. Artz, Supervisor (Continued)

igniters and pyrotechnics and initiated control and test procedures and wrote process and acceptance specifications. Conducted tests on pyrophoric materials and established assembly operations for pyrophoric igniters. Established processing and quality control procedures for solid propellant gas generators and propellant materials.

Mr. Artz is presently Supervisor of Ignition Devices Unit, responsible for igniter development and production of both pyrotechnic and pyrophoric devices, hybrid grain development, solid propellant tank pressurizations systems, and solid propellant gas generators.

Mr. Carl R. Fingerhood, Senior Engineer, Research

Education:

University of Missouri 1937 B.S.-Chemical Engineering

Experience:

The Blanton Company	1937-1939 - Chemist
Lever Bros. Company	1939-1941 - Chemist
U. S. Cartridge Company	1941-1943 - Chief Explosives Chemist
Universal Match Company	1951-1956 - Jr. Project Engineer
Olin Mathieson Chemical Corp.	1956-1957 - Project Engineer
McDonnell Aircraft Corporation	1957-1958 - Armament Systems Engineer
Rocketdyne	1959 - Present - Senior Engineer-Research

Conducted quality control testing of small arms ammunition and established production techniques for processing of explosives, pyrotechnics and flares. Established quality control procedures for the above processes. Conducted research on gas generating propellants and pyrotechnic charges. Developed specialized propellants for use in chemical warfare and worked on incendiary mixtures, including Napalm. Developed infra-red diversionary devices. Worked on ammonium nitrate propellants suitable for APU's and developed igniters for these devices. Made a study of applications of cartridge actuated devices and developed propellants for use in these items. Conducted research and development on edible oils and detergents and conducted quality control testing of in-process materials. Conducting feasibility studies on various hybrid rocket motor systems determining physical and ballistic properties and conducting pyrotechnic development program using pressed charges.

Ex. 34 - 5255

Mr. Donald K. Taylor, Senior Engineer, Research

Education:

Ventura College	1952-1954	AA - Chemistry
University of California, Santa Barbara College	1954-1956	BA - Chemistry

Experience:

Rocketdyne	1956-Present	Engineer, Senior Engineer, Research

Conducted research and development on pyrotechnic igniters for liquid engine applications. Developed modified pyrotechnics and designed a minimum hardware igniter for which a patent application has been filed. Evaluated new igniter designs, worked with quality control of established designs, writing process specifications and establishment of production assembly lines. Responsible for setting up hypergolic material loading facility, evaluation of these compatibility tests. Designed tests for evaluation of physical and ballistic properties of solid propellants made by QuickMix method. Responsible engineer for developing a liquid helium propellant tank pressurization system where he designed the necessary equipment, supervised the construction of the test site and conducted an extensive evaluation program. Responsible engineer for development, surveillance, and quality control testing of solid propellant gas generators and initiators.

Mr. James K. Patrick, Engineer, Research

Education:

Purdue University	1951-1956	B.S.-Chemical Engineering

Experience:

Consolidated Industries, Inc.	1954-1955	Quality Control Inspector
Brown Rubber Co., Inc.	1955-1956	Jr. Research Engineer
North American Aviation	1956-1957	Design Engineer
Rocketdyne	1957-Present	Engineer, Research

Maintained quality control standards for production processing and assembly operations in production of wing-tip tanks for F-86 fighters. Improved and evaluated urethane and vinyl chloride foam sponges and developed pilot plant processing techniques for their production applications. Conducted systems analysis studies on auxiliary power unit for aircraft such as fighters. Determined flow characteristics and

Mr. James K. Hetrick, Engineer, Research (Continued)

dilution problems of pressurization systems using gaseous He and N_2. Developed solid propellant gas generating devices for use on liquid engines. Designed igniters for solid propellant gas generators. Conducted advanced pressurization system studies utilizing solid propellant exhaust gases as propellant tanks pressurant. Designed and developed coolant packs to reduce exhaust gas temperature. Conducted studies to determine compatibility on solid propellant exhaust gases with storable oxidizers and fuels.

Mr. John D. Cordill, Engineer, Research

Education:

Rose Polytechnic Institute	1953-1957	B.S. - Chemical Engineering

Experience:

Allison Div. G.M.C.	1957-1959	Experimental Test Engineer
Rocketdyne	1959-Present	Engineer, Research

Worked at Allison Div. G.M.C. as an Experimental Test Engineer where he was responsible for design and build-up of test systems, conducting test programs and evaluation of test data on high energy fuels, rocket nozzles and turbo-jet, turbo-prop, ramjet and rocket components and engines. At Rocketdyne, Mr. Cordill has conducted research and development work on hypergol and pyrotechnic igniters and aided in the development of a pyrotechnic high altitude igniter. Established operating procedures for production and test of hypergolic and pyrotechnic igniters.

Ex. 34 - 5257

99

PROCEDURES FOR

PENTASCRAME (PB)

ACTIVITIES

Propulsion Research Area (PRA)
PROPULSION FIELD LABORATORY

ROCKETDYNE

A DIVISION OF NORTH AMERICAN AVIATION INC.

CANOGA PARK, CALIFORNIA

Ex. 34 - 5258

GURICAN
000174

99

PROCEDURES FOR

PENTABORANE (PB)

ACTIVITIES

Propulsion Research Area (PRA)
PROPULSION FIELD LABORATORY
ROCKETDYNE

Prepared by:

N. M. Bauman

M. D. Blair

B. Harding

Liquid Engine Applications Group
Research

Approved by:

[illegible]

[illegible]

Ex. 34 - 5259

GURICAN
000175

Ex. 34 - 5260

TABLE OF CONTENTS

Frontspiece - The Propulsion Research Area

INTRODUCTION

PART I

Propulsion Research Area (PRA) Procedures

A. PERSONNEL PROTECTION — Page No.

1. Respiratory 3
2. Skin 4
3. Detection 5

B. DECONTAMINATION

1. Normal 5
2. Spills 6

C. TEST OPERATION PROCEDURES, GENERAL PLAN TOC

1. PRA - TOC - PFL Relation 6
2. PRA - Restricted Areas 7
3. Communications 9

D. EMERGENCIES

1. Working Hours 10
2. After Working Hours 11

PART II

Pentaborane Flow System Procedures

Ex. 34 - 5261

Paragraphs

A. 101 and 103 PENTABORANE FLOW SYSTEM 12
B. PENTABORANE FILLING 13

Page No.

C. PENTABORANE LIQUID RETURN TO BOTTLES 18

D. PENTABORANE BOTTLE DISCONNECTION 19

E. TRANSFER OF PENTABORANE TO CATCH TANK 20

F. DISPOSAL OF PENTABORANE INTO SUMP & BURNING 21

G. COMPLETE SYSTEM DECONTAMINATION 22

H. DECONTAMINATION OF HARDWARE, HAND TOOLS, & EQUIP. 23

I. CALIBRATION PROCEDURE FOR PENTABORANE TANK 24

J. PENTABORANE SYSTEM INSPECTION 24

PART III

Other Procedures

A. EQUIPMENT LABORATORY (EL) 26

B. SPECIMEN PENTABORANE CHECKOUT LIST 28

C. SPECIMEN TEST PROCEDURE 30

D. DECONTAMINATION SOLUTION SYSTEM IN PRA 33

E. PERSONNEL DECONTAMINATION IN PRA 34

F. OVERNIGHT AND WEEKEND RESTRICTED AREAS 36

G. SPECIMEN HANETTE PROCEDURE 37

INTRODUCTION

The following pages outline procedures to be used for pentaborane (PB) activities in the Propulsion Research Area (PRA). They are to be used in conjunction with well instructed personnel and a suitable description of PB and its problem areas. Temporarily, until a suitable section of PFA/59/3 (Propellant Field Use Manual) is written for PB, the Olin Mathieson Chemical Corporation technical Bulletin LF202, June 1960, will serve for description of PB and its problem areas.

Any comments, corrections, additions, etc., should be submitted to the authors.

PART I

PROPULSION RESEARCH AREA (PRA)

PROCEDURES

A. PERSONNEL PROTECTION

1. Respiratory (Figure 1)

a. Test Pit Area

1. Self-contained Scott Air Paks with pressure demand feature for test pit area and control center. (See below.)/or

2. Self contained Scott Air Paks in conjunction with manifold extension of #b below.

b. Control Center - Air conditioning is turned off at the start of PB handling and is kept off until PB hazard is gone.

1. Fresh Air Inlet Duct. This duct will provide positive pressure to control center; wind direction-and-velocity indicator is located near entrance to duct and is monitored in control center.

If wind direction (Fig. 2) is correct, fresh air inlet duct can be used during propellant transfer, pre- and post-firing inspections, decontaminations, etc. For firing activities, see below.

2. Breathing Air Manifold System (Fig. 1)

a. While fresh air inlet duct is operating personnel will have Scott Air Paks turned on and back over shoulders but bottles not in use below.

Ex. 34 - 5265

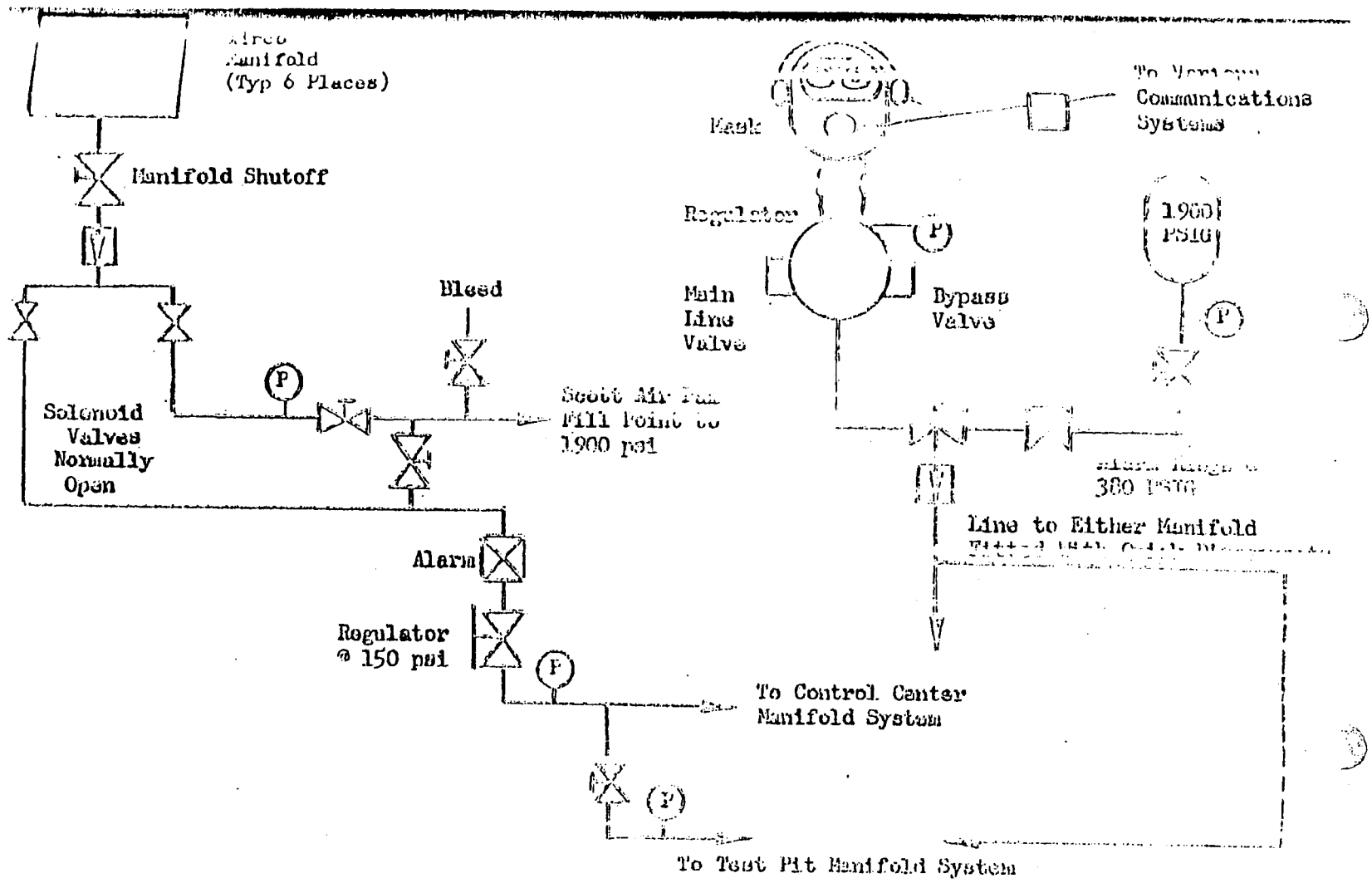

PROPULSION RESEARCH AREA BREATHING AIR SYSTEMS
MANIFOLD AND SCOTT AIR PAK FILL

Figure 1

Ex. 34 - 5266

GURICAN
000182

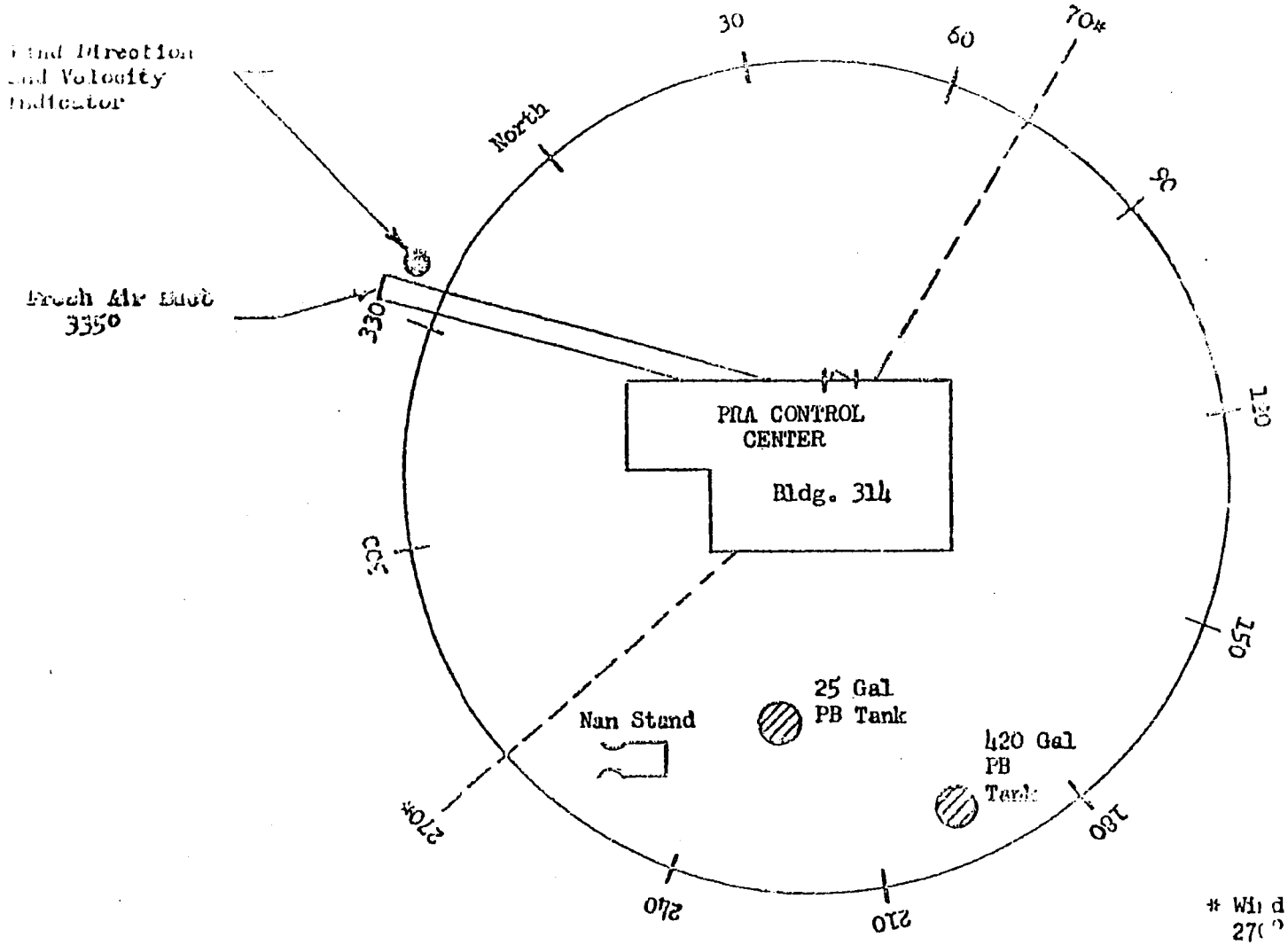

* Wind Blowing From 270° to 70° is Satisfactory for Firing, Transfer Decontamination, etc.

WIND RELATIONSHIPS IN PRA

FIGURE 2

b. If wind speed or velocity changes adversely at duct entrance, during transfer, pre- and post-firing inspection, decontamination, etc., mask will be put on and air will be supplied by manifold and fresh air inlet duct will be turned off. Duct can be turned on again and masks taken off at discretion of Responsible Project Engineer.

c. During PB tank pressurization and test firings, personnel will be on manifolded system. Fresh air inlet duct will be off.

2. Skin

a. General. At start of PB test activities, all personnel in PRA will change into flame-proof coveralls. All personnel will wear boots (Tingly Neoprene) for personal protection and to minimize taking any contamination out of PRA and home from PFL. A Decon boot bath will be used to prevent contaminating the PRA control center and workshop. Also, see Part III I.

b. Control Center Clothing (See [illegible],2,a)

c. Dust Pit Operations. While test pit area is in hazardous condition, all personnel are to wear Gra-lite suits and hood, Neoprene boots, and Gra-lite gloves. A hazardous condition is to be determined by Responsible Project Engineer.

3. Detection

a. (See Photo No. 1222 8/9/60 SLE) The Olin Mathieson Demon type borane monitor, a semi-automatic, continuous borane detection device of exceptional sensitivity will be used. This detector is sensitive to temperature changes and to other propellants. The Responsible Project Engineer is responsible for seeing that this detector is in proper working order.

B. DECONTAMINATION

1. Normal

a. Test Hardware, Tools, PB Systems (See Part II)

b. Propulsion Research Area

1. Survey entire area during loading and both before and after test firing with Demon borane monitor and attempt to determine levels of contamination.

2. Test Pit Area - PRA

a. After PB test activities are over for day

1. water wash with rainbirds and firex system

2. Decon wash (3% NH_3 solution and detergent) (see Section III-D

3. water wash

4. survey area with Demon borane monitor

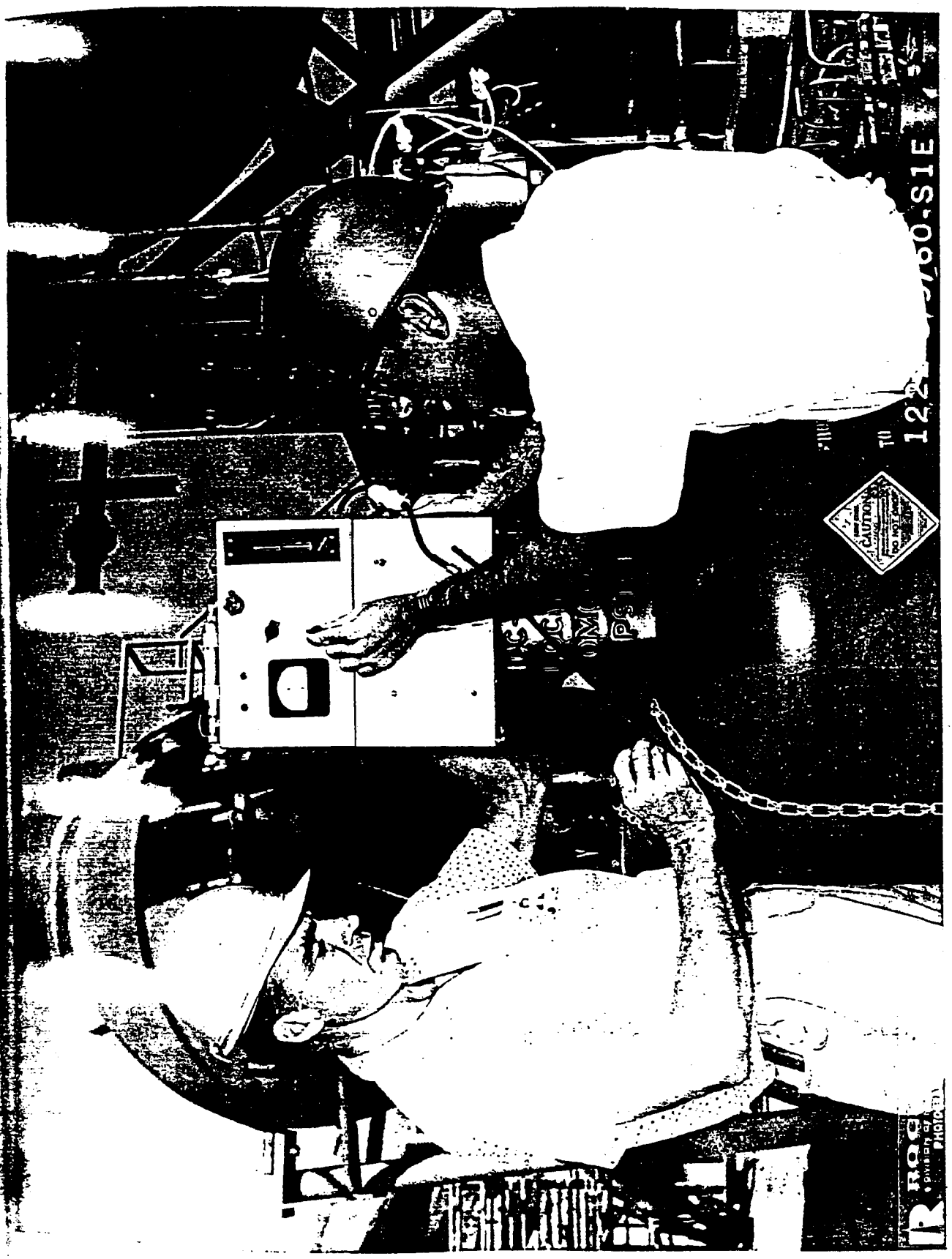

Ex. 34 - 5270

3. Control Center and Shop

a. After PB test activities are over for day

1. survey with Demon borane monitor

2. blow out with fresh air duct or air conditioner.

c. Personnel (See Section III-E)

d. PB Spills

1. If spilled PB does not ignite, it will be ignited with a flare and allowed to burn. Adjacent areas will be protected with Firex systems.

2. Decontamination of area will proceed as in Part B.1.-b.2

C. TEST OPERATION PROCEDURES, GENERAL PLAN TCC

1. PRA - TOC - PFL Relations

a. Brief description of Test Operations Control Center (TOC)

1. PRA test activity with special propellants such as PB is monitored by the PFL Test Operation Control Center (TOC). The TOC can be reached by the yellow phone in the PRA Control Center, and on Ext. 5600 on the regular phone system. Briefly, the functions of TOC are as follows:

a. Act as a central schedule recording agency for all large engine test activities and all special propellant test activities at PFL, including Components and Research.

Ex. 34 - 5271

b. Provide a central [illegible] for transmittal of run [illegible] information to [illegible] Security and other interested departments

c. Maintain a display of PFL which reflects the instantaneous status of all test activities.

d. Control visitors' tours of the test areas.

e. Provide meteorological control for testing with special propellants.

f. Determine amount of special propellants to be used in test areas and control test activities on the basis of meteorological conditions.

b. For weekend and evening operations, virtually all of Area I will be closed as well as PRA. TOC will determine such closure in conjunction with PRA engineers.

c. Securing PRA for PB activities other than weekend

1. Check with TOC by 9:30 AM of the test day about wind conditions for the day.

2. Notify TOC 30 minutes prior to the test or propellant transfer operation and get permission to proceed. TOC will advise if a roadblock is required and what areas will be evacuated.

3. Notify PRA by public address with a suitably worded announcement that the test or transfer is 15 minutes away from being accomplished.

4. Notify the following activities at 15 minutes before a test or transfer that a test or transfer (indicate which) is about to be made and to evacuate the area. Receive confirmation.

Ex. 34 - 5272

TOC . . . . . Yellow Phone

* NAKA . . . . . Ext. 5307

* PEROXIDE . . . . . Ext. 5306

* TUNNEL . . . . . Ext. 5305

* CHEM. ENGR. LAB. . . . . Ext. 5341-5342

* HAPPY VALLEY . . . . . Ext. 5412

* FUEL DUMP . . . . . Ext. 5050

* These activities can be warned and a confirmation received by the overall Research Area paging system (All Call).

Activities not listed here will be notified and given instructions by TOC.

5. Give a suitable worded public address announcement and blow 3 - one-second siren blasts at 3 minutes prior to the test. Raise the red flag and turn on the PRA red lights.
6. At 20 seconds, blow single ten-second siren.
7. Time: ZERO - FIRE.
8. After venting, TOC, in conjunction with project engineer, will determine when specific activities outside of PRA can be resumed.
9. PRA will be cleared, when project engineer determines area is not contaminated, by a series of horn blasts, paging system announcement, and changing visual indicators from red to yellow.
10. Notify TOC and adjacent areas that PRA is clear.

Ex. 34 - 5273

GURICAN
000189

2. PRA - Restricted Areas

PRA restricted areas will be posted:

a. Contaminated Area

While test pit area and test stand is contaminated, as determined by responsible area engineer, all PRA is restricted to authorized "test personnel" and emergency personnel only.

b. After Decontamination

Restricted areas, as posted, will be limited to those people specifically authorized by Group 591-361 Group Scientist or designee. Nan stand personnel will wear protective clothing as required by responsible project engineer for test stand operation.

c. Overnight and weekend restricted areas (see Section III-F).

3. Communications

The following communication systems are available for the Nan stand PB tests.

a. TOC phone (yellow) - This phone can be spoken into from Scott Air Paks through Voicecastar.

b. Regular telephone (black) same as TOC phone for Scott Air Paks.

c. Roadblock phone (black) same as TOC phone for Scott Air Paks.

d. Local pit phone system

e. Local PRA paging system, same as TOC phone.

f. Overall Research paging system (All Call) same as TOC phone.

Ex. 34 - 5274

4. Public Address Announcements

It is suggested that the announcer take time to write the announcement and read it carefully over the PA system. Repeat each announcement twice. It is essential that announcements are clear and that all areas are continually kept informed of all test activity if it deviates from that which has previously been announced.

The 15 minute announcement should be repeated twice and state that the test or transfer is 15 minutes away.

Following is a suggested 3 minute announcement:

Test Firing: Your attention please - - - -
There will be a firing (or sequence of firings) on Nan stand in test pit one. Please clear the test pit area. The propellants will be pentaborane and hydrazine.

Repeat! Be Clear! Keep All Areas Informed!

Then Blow 3-Minute Sirens!

D. EMERGENCIES

1. Working Hours

In case of suspected exposure to boron compounds, call Ext. 5333 for rescue crew [illegible], if available, nurse, [illegible] the following on-the-spot treatment.

a. Eye Contact - Flush with water

b. Skin Contact - Flush with water, Burned clothing to be removed by both fire [illegible] and [illegible]

Ex. 34 - 5275

c. Inhalation - give oxygen and call fire department rescue.

2. After Working Hours

If adverse symptoms such as visual disturbance, muscle weakness, impaired coordination, drowsiness, tremor or profuse sweating appear, give oxygen and call ROCKETDYNE CONTROL CENTER

6633 Canoga Avenue, Canoga Park, California

Diamond 7-5651, Extension 2351

Report Pentaborane Symptoms

PART II

PRA NAN STAND AND PENTABORANE FLOW SYSTEM PROCEDURES

PHOTOGRAPHS AND DIAGRAMS

Ex. 34 - 5277

PHOTOGRAPHS

1241 - 8/5/60 S1G

The 420 gallon, 3,000 psi pentaborane (PB) propellant feed tank showing pentaborane shipping cylinders hooked up for PB transfer operations.

1241 - 8/5/60 S1R

The bottom of the 420 gallon tank showing the main tank shut-off valve and associated plumbing.

1241 - 8/5/60 S1B

A typical section of the PB flow system showing Sugar Stand prevalve.

1241 - 8/5/60 S1C

View of the rear of Man Stand blast plate showing 2" pentaborane main valve and associated plumbing including micrometer take off points.

Ex. 34 - 5278

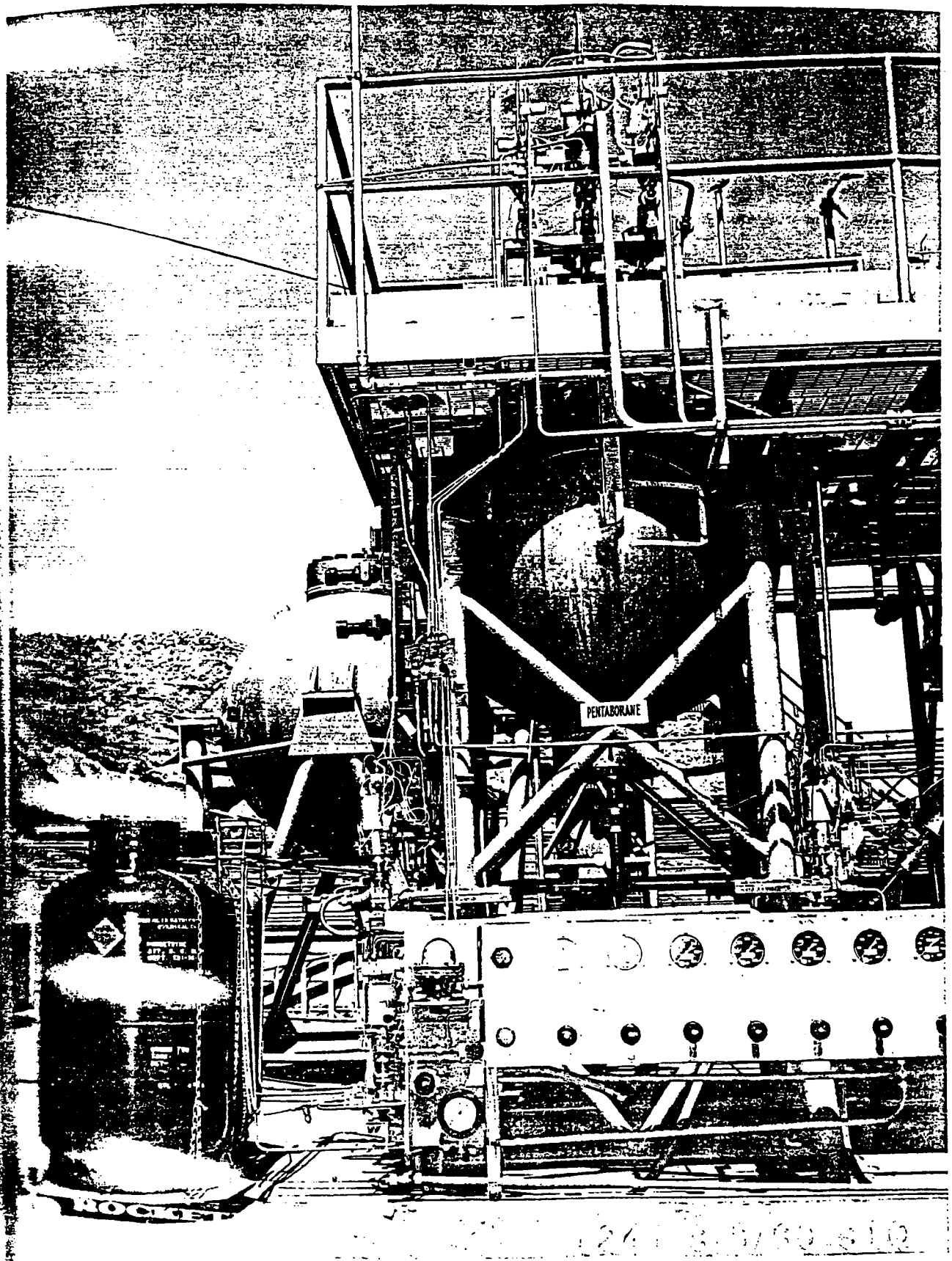

Ex. 34 - 5279

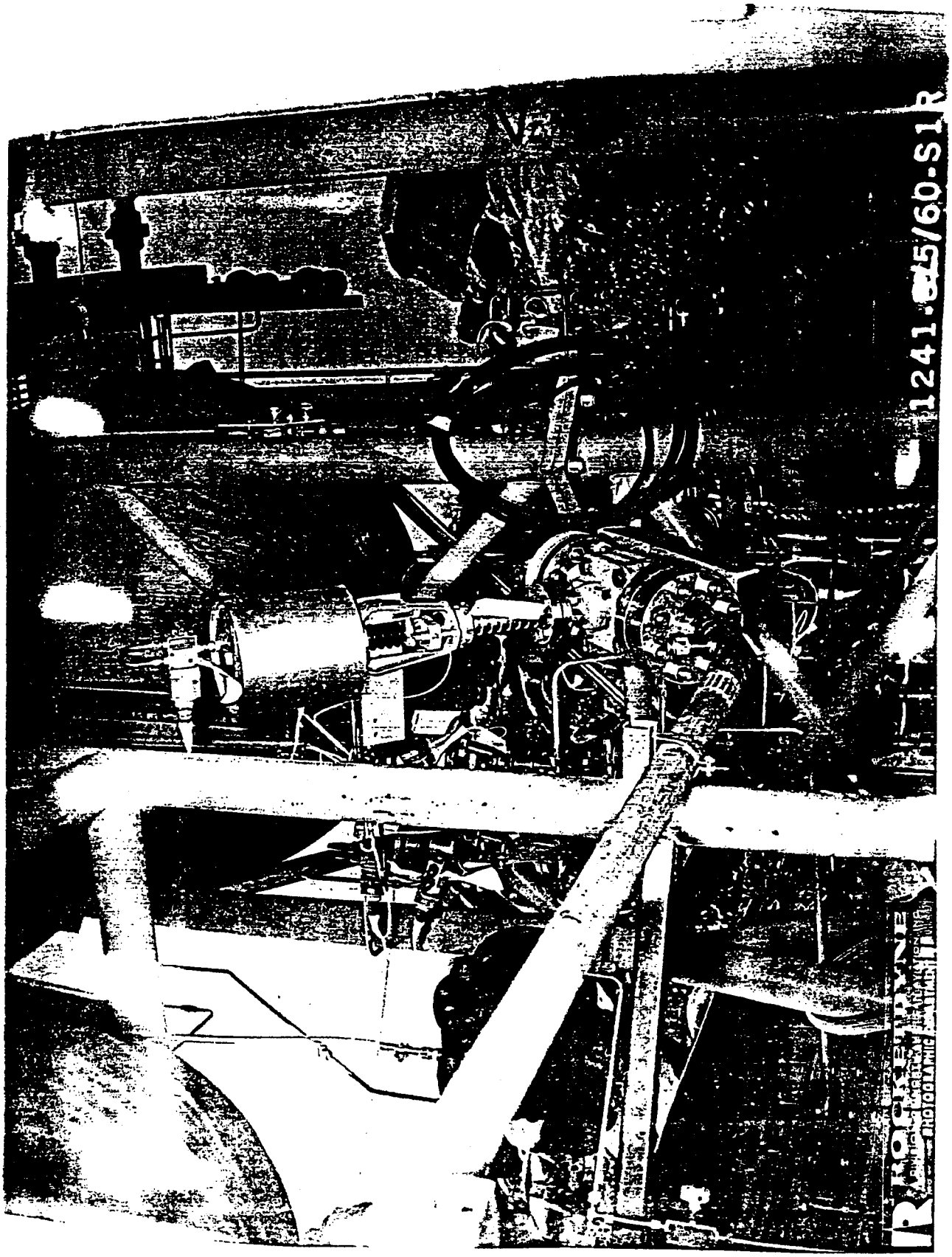

Ex. 34 - 5280

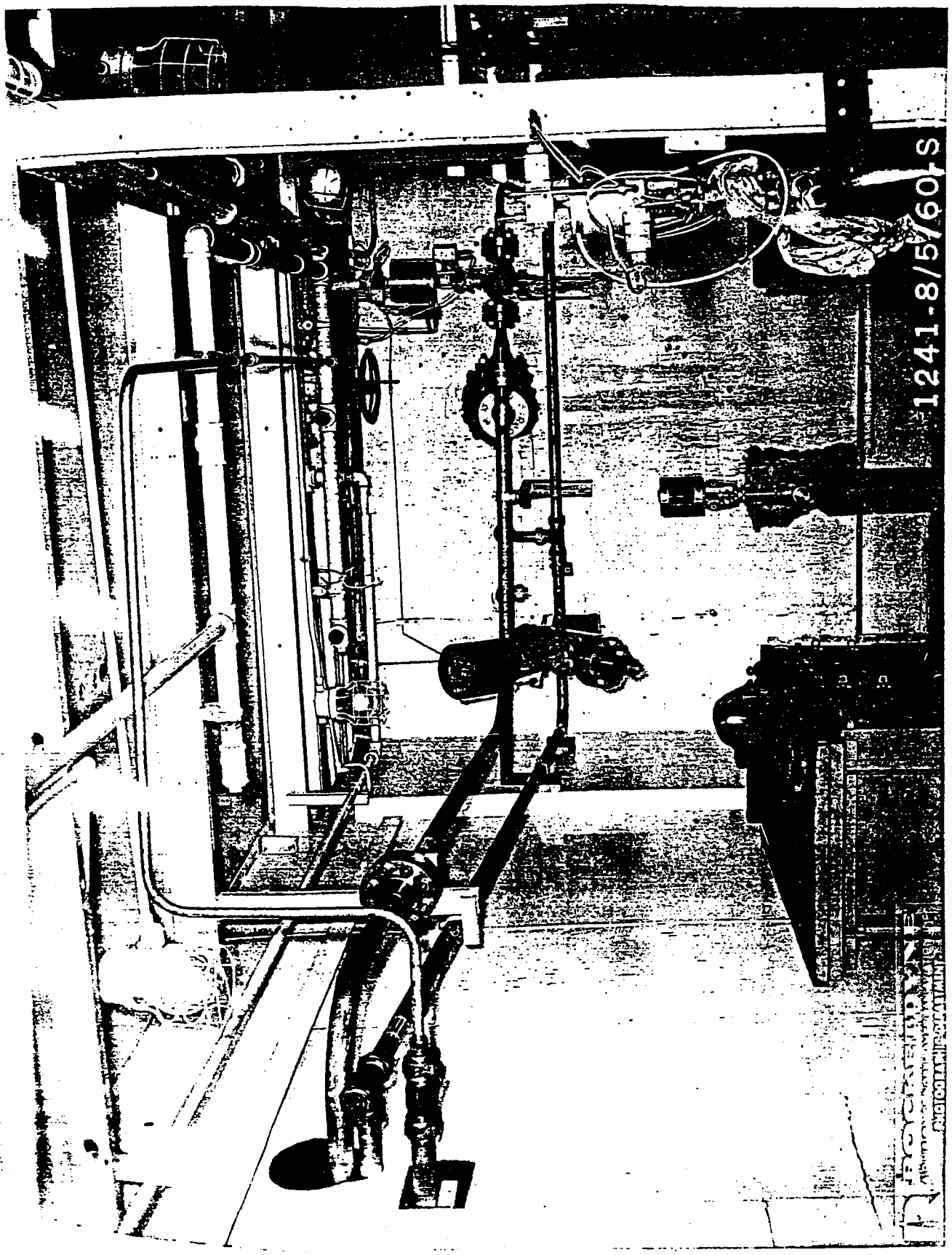

Ex. 34 - 5281

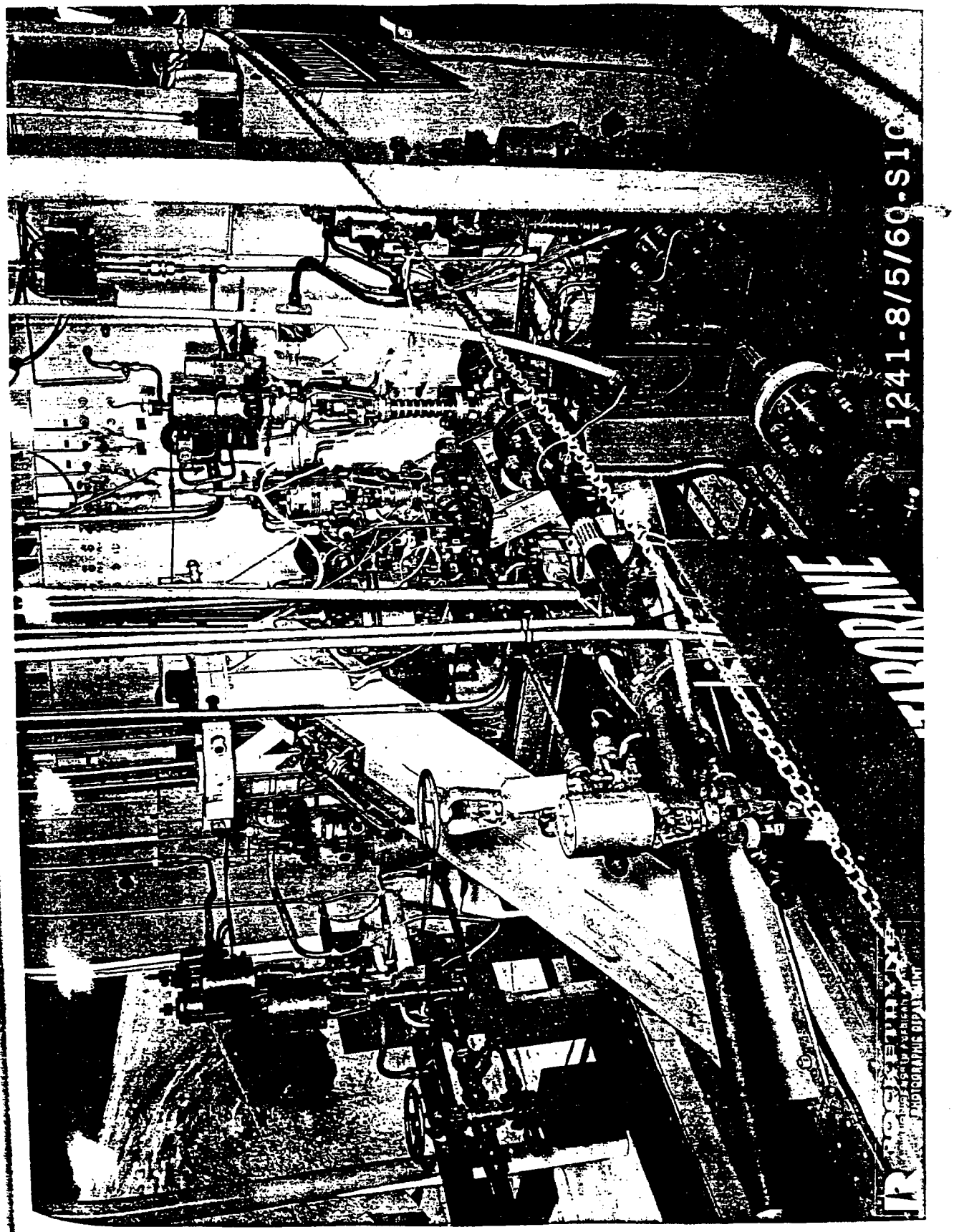

Ex. 34 - 5282

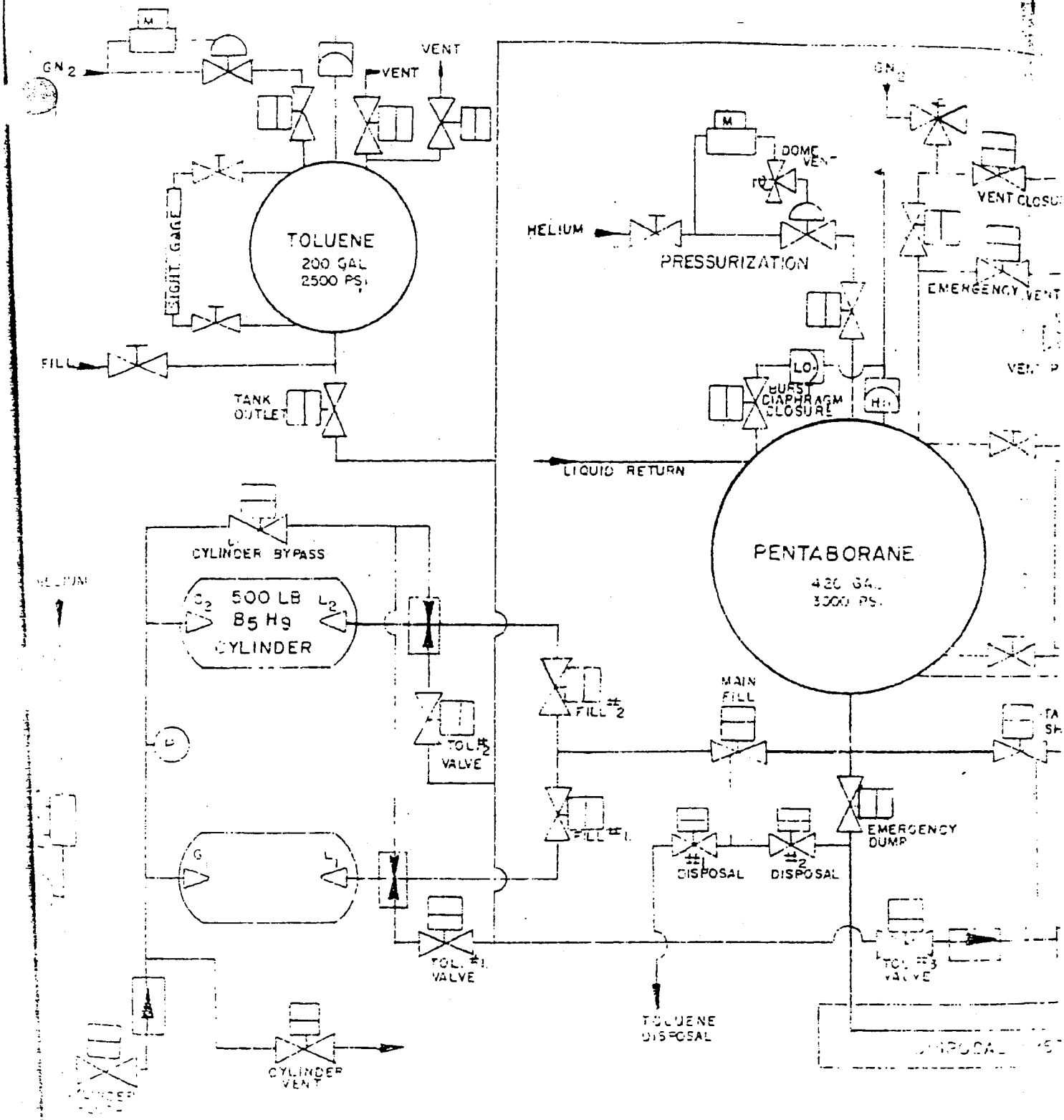

10 AND 30K PENTABORANE FLOW SYSTEM

Ex. 34 - 5283