PROGRESS REPORT
FOURTH QUARTER 2005
SUBSURFACE CHARACTERIZATION AND INTERIM REMEDIATION

Former Univar USA Inc. Facility
5353 Jillson Street
Commerce, California

May 31, 2006

PREPARED FOR

Univar USA Inc.
32131 Steven Way
Conifer, Colorado 80433

PREPARED BY

Rubicon Engineering Corporation
16 Technology Drive, Suite 138
Irvine, California 92618

Mohsen Mehran, Ph.D.
Principal

Darren Brandner, P.E.
Senior Engineer

Project No. 1001.02

RUBICON
Engineering Corporation

May 31, 2006 Project No. 1001.02

Ms. Lorraine Larsen-Hallock
DEPARTMENT OF TOXIC SUBSTANCES CONTROL
8800 Cal Center Drive
Sacramento, California 95826

Progress Report –Fourth Quarter 2005
Subsurface Characterization and
Interim Remediation
Former Univar USA Inc. Facility
5353 Jillson Street
Commerce, California
(Docket HWCA P1-01/02-004)

Dear Ms. Larsen-Hallock:

On behalf of Univar USA Inc., Rubicon Engineering Corporation submits two copies of the progress report on subsurface characterization and interim remediation activities conducted during the fourth quarter 2005 at the subject site. The report is submitted in accordance with the requirements of the February 14, 2002 Corrective Action Consent Agreement between the California Environmental Protection Agency Department of Toxic Substances Control and Univar USA Inc. If you have any questions, please do not hesitate to call.

Respectfully submitted,

RUBICON ENGINEERING CORPORATION

Mohsen Mehran, Ph.D.
Principal

MM:db
Enclosure
cc: Treva Miller, DTSC (2 copies)
Mr. George Sylvester - Univar USA Inc.
Mr. James Hooper - Univar USA Inc. (w/o attachments)

P:\1001 Univar\02 Jillson\Progress Reports\2005 4Q Progress Report\4Q05 ProgRpt.doc

16 Technology Drive, Suite 138 • Irvine, California 92618 • Phone (949) 296-1177 Fax (949) 296-1178

CERTIFICATION

I certify that the information contained in or accompanying this submittal is true, accurate, and complete. As to those portions of this submittal for which I cannot personally verify the accuracy, I certify that this submittal and all attachments were prepared at my direction in accordance with procedures designed to assure that qualified personnel properly gathered and evaluated the information submitted. I am aware that there are significant penalties for submitting false information, including the possibility of fine and imprisonment for knowing violations.

Signature: _____

Name: George Sylvester, P.G.

Title: Univar Project Manager

Date: May 19, 2006

TABLE OF CONTENTS

Page

LIST OF TABLES ..... **iii**

LIST OF FIGURES ..... **iv**

1.0 INTRODUCTION **1**
- 1.1 BACKGROUND 1
- 1.2 OBJECTIVE AND REPORT ORGANIZATION 2

2.0 SUMMARY OF COMPLETED AND PROJECTED ACTIVITIES **3**
- 2.1 COMPLETED ACTIVITIES 3
- 2.2 PROJECTED ACTIVITIES 4

3.0 SUBSURFACE CHARACTERIZATION **5**
- 3.1 GROUND WATER MONITORING 5
- 3.2 GROUND WATER HYDROLOGY 5
- 3.3 GROUND WATER SAMPLING 5
  - 3.3.1 Well Purging 5
  - 3.3.2 Sample Collection 6
- 3.4 GROUND WATER QUALITY 6
  - 3.4.1 VOCs 6
- 3.5 QUALITY ASSURANCE/QUALITY CONTROL MEASURES 7
  - 3.5.1 Blank Sample Analyses 8
  - 3.5.2 Data Precision 8
  - 3.5.3 Data Accuracy 8
- 3.6 INVESTIGATION-DERIVED WASTES (IDWS) 8

4.0 INTERIM REMEDIAL MEASURES **9**
- 4.1 SOIL VAPOR MONITORING 10
- 4.2 SVET SYSTEM OPERATION 10
  - 4.2.1 Fourth Quarter 2005 11

REFERENCES **12**

TABLES

FIGURES

APPENDIX A: FIELD MONITORING RECORDS, FOURTH QUARTER 2005

APPENDIX B: HISTORICAL GROUND WATER LEVEL DATA

APPENDIX C: GROUND WATER QUALITY HISTORY

APPENDIX D: CERTIFICATES OF ANALYSES, GROUND WATER QUALITY DATA, FOURTH QUARTER 2005

Page

APPENDIX E: VAPOR EXTRACTION/TREATMENT SYSTEM OPERATION HISTORY

LIST OF TABLES

Table No.	Title
1	Anticipated Schedule, RCRA Facility Investigation (RFI) and Corrective Measures Study (CMS)
2	Well Completion Details
3	Ground Water Level Data, Fourth Quarter 2005
4	Summary of Field Water Quality Parameters, Fourth Quarter 2005
5	Summary of Organic Compounds in Ground Water, Fourth Quarter 2005
6	Field and Laboratory Duplicate Sample Analysis, Fourth Quarter 2005
7	History of VOC Concentrations in Soil Vapor
8	Field Operation and Monitoring Data
9	Summary of Organic Compounds in SVET Influent and Effluent

LIST OF FIGURES

Figure No.	Title
1	Site Location Map
2	Site Plan
3	Ground Water Well Location Map
4	Ground Water Elevations, November 2005
5	Distribution of TCE in Ground Water, November 2005
6	Distribution of PCE in Ground Water, November 2005
7	Temporal Variation of TCE and PCE Concentrations in Ground Water
8	SVET System Schematic Flow Diagram
9	SVET System Layout
10	Soil Vapor Well Location Map

1.0 INTRODUCTION

This progress report describes the subsurface characterization and interim remediation performed during the fourth quarter 2005 at the former Univar USA Inc. (Univar) facility in Commerce, California. The report also presents a summary of the activities planned for the first quarter of 2006. The report has been prepared by Rubicon Engineering Corporation (Rubicon) in accordance with the requirements of the February 14, 2002 Corrective Action Consent Agreement (the Consent Agreement) between the California Environmental Protection Agency (Cal/EPA) Department of Toxic Substances Control (DTSC) and Univar. The Consent Agreement provides the framework for RCRA Facility Investigation (RFI) and Corrective Measures Study (CMS) at the subject site. The anticipated schedule for the RFI/CMS process is presented in Table 1. The remainder of this section provides a brief project overview and the objectives of this progress report.

1.1 BACKGROUND

From 1986 through October 2002, Univar owned a warehouse storage and distribution facility at 5353 Jillson Street in Commerce, California. The location of the site is shown in Figure 1 and a plan of the site is presented in Figure 2. In October 2002, the site was sold to Boss Office Products, Inc., a company that assembles and distributes office chairs. During Univar's ownership, the site featured two warehouses and an outdoor bermed area that were used for temporary storage of chemicals and other products in a variety of containers, from bags, boxes, and pails to drums and intermediate bulk containers. The chemicals and products that have reportedly been stored at the site include acids, alkalis, aliphatic and aromatic hydrocarbons, alcohols, ketones, glycols, surfactants, detergents, bleach, etchants, pesticides, herbicides, fumigants, and turf-care products such as fertilizer and urea. As the facility was used for storage and distribution, the containers, chemicals, and products were not opened, used, or repackaged.

Prior to Univar's ownership, the facility was owned and operated by Medford Chemical and McKesson & Robbins, Inc./McKesson Chemical Co. from 1953 to 1986. As part of their operations, four 5,000-gallon aboveground storage tanks (ASTs) that contained acids, and eight 10,000-gallon solvent and two 7,500-gallon fuel underground storage tanks (USTs) were utilized to support distribution operations. All of the ASTs and USTs were removed between the early to mid-1970s and 1985.

Subsurface investigations began at the site in 2001 in association with the closures of a former clarifier and a former RCRA Hazardous Waste Container Storage Area (RCRA Storage Area) (England Geosystem, January 29, 2002; April 29, 2002). The investigations focused on the upper vadose zone beneath and in the vicinity of the former clarifier and the former RCRA Storage Area. The investigations showed that volatile organic compounds (VOCs) were present in vadose zone soils, particularly to depths of 40 to 50 feet below ground surface (bgs), and in ground water. The results of these investigations, reiterated in the Current Conditions Report

(England Geosystem, May 20, 2002), led to the development of the Consent Agreement (DTSC, February 14, 2002).

Within the framework of the Consent Agreement, the RFI is being implemented in phases. Phase I of the RFI encompassed the previously mentioned investigations associated with the former clarifier and former RCRA Storage Area. The Phase II RFI included further characterization of the vertical and horizontal extent of VOCs in the vadose zone, an evaluation of ground water quality in the uppermost water-bearing zone, and an assessment of hydrogeologic conditions at the site. The results of the Phase II RFI activities performed were summarized in two reports submitted to DTSC (England Geosystem, November 12, 2002; December 18, 2002). Based on DTSC's comments dated January 15 and September 11 and 12, 2003, the Phase II RFI Work Plan Addendum was issued (England Geosystem, October 2, 2003). The activities outlined in the Work Plan Addendum were completed during the fourth quarter 2003 and first quarter 2004. Consequently, the available site-specific data were sufficient to proceed with the evaluation and implementation of interim remedial measures. Therefore, Revision 1 of the Interim Soil Remedial Measures Work Plan (England Geosystem, September 30, 2003) was issued, which was subsequently approved by DTSC for implementation. The principal component outlined in the work plan was the installation of a soil vapor extraction/treatment (SVET) system.

Beginning in October 2004 and proceeding into March 2005, the SVET system was installed at the site. The SVET system operated in start-up and testing mode throughout the fourth quarter of 2005. Description of SVET system start-up and testing operation is summarized in Section 4.0. System specifications have been provided in the January 17, 2006 As-Built Report and Operation and Maintenance Plan (Revision 0). Indoor air sampling was conducted at residences adjacent to the site on November 1 and 2, 2005. The results of the indoor air sampling and associated soil vapor sampling has been reported in the *Indoor Air Sampling and Analysis Report* (Rubicon, January 31, 2006).

1.2 OBJECTIVE AND REPORT ORGANIZATION

The objective of this progress report is to update DTSC and other regulatory agencies with activities conducted at the site during the fourth quarter 2005. Section 2.0 of this report includes a summary of the activities performed at the site from October through December 2005 and those planned for January through March 2006. A description of the activities performed from October through December 2005 is presented in Section 3.0. Section 4.0 describes the status of interim remedial measures for the site. Appendix A contains field records for ground water monitoring conducted in November 2005. Historical ground water level data are provided in Appendix B, and historical ground water quality data are provided in Appendix C. Appendix D contains the certificates of analyses for ground water samples collected. Operation history of the SVET system is presented in Appendix E.

2.0 SUMMARY OF COMPLETED AND PROJECTED ACTIVITIES

This section summarizes the site activities completed from October through December 2005 and the activities conducted from January through March 2006. A timeline showing the anticipated schedule for the Phase II RFI and related activities is presented in Table 1.

2.1 COMPLETED ACTIVITIES

Date	Activity
October 10, 2005	Submit Draft SVET system startup and testing report to DTSC.
November 1 to 3, 2005	Perform Indoor Air Sampling and related Soil Gas Sampling at residences adjacent to site.
November 1 to 4, 2005	Perform quarterly soil vapor monitoring of extraction and monitoring wells.
November 7 to 9, 2005	Perform fourth quarter 2005 ground water monitoring activities.
December 9, 2005	Submit Third Quarter 2005 progress report to DTSC.
October through December 2005	SVET system operation in startup mode.

2.2 PROJECTED ACTIVITIES

Date	Activity
January 12, 2006	Submit Work Plan for Drilling an Exploratory Boring and Well Installation to DTSC.
January 17, 2006	Submit As-Built Report and Operation and Maintenance Plan (Revision 0) to DTSC.
January 19, 2006	Submit Revision 1 of the Soil Vapor Extraction/ Treatment System Startup report to DTSC.
January 23-27, 2006	Conduct deep boring investigation and install Wells MW-16A and MW-16B.
January 31, 2006	Submit Indoor Air Sampling and Analysis Report to DTSC.
February 2006	Perform quarterly soil vapor sampling of extraction and monitoring wells.
	Perform first quarter 2006 ground water monitoring activities.
January through March 2006	Continue SVET system operation in startup mode.

3.0 SUBSURFACE CHARACTERIZATION

This section describes ground water monitoring activities performed in the fourth quarter of 2005. The activities included ground water level measurements, ground water purging and sampling, chemical analyses, and the associated quality control measures.

3.1 GROUND WATER MONITORING

This section describes water level measurements, quarterly ground water sampling, chemical analytical results, and data evaluation. The field monitoring data are presented in Appendix A.

3.2 GROUND WATER HYDROLOGY

Ground water levels were measured in each of the monitoring wells on November 7, 2005. The well locations are shown in Figure 3. The water levels were measured, using an electric well sounder, immediately after accessing each well and prior to any artificial water level disturbance. The measurements were recorded to the nearest 0.01 foot relative to the top of the casing (Table 2) in each well. The fourth quarter 2005 ground water level data are summarized in Table 3. The historical ground water level data are presented in Appendix B.

As shown in Table 3, the depth to ground water relative to the top of well casings varied from 85.59 feet in Well MW-5 to 91.80 feet in Well MW-14. Ground water contours were generated from the November 2005 ground water elevation data using CIVILSOFT's "Contour Plus" software. The contours, shown in Figure 4, indicate flow to the south-southwest with an average hydraulic gradient of approximately 0.004. The ground water flow direction and gradient at the site are consistent with the historical data.

Historical ground water level data, presented in Appendix B, show that the overall ground water elevation at the site is decreasing and has dropped approximately 2.5 feet since July 2002.

3.3 GROUND WATER SAMPLING

From November 7 through 10, 2005, ground water was sampled from monitoring wells MW-1 through MW-15. Field activities included well purging, recording of field water quality parameters, including pH, electrical conductivity (EC), temperature, and turbidity; and sample collection.

3.3.1 Well Purging

Prior to sampling, the monitoring wells were purged to remove standing water in the well casings and promote the inflow of representative ground water from the surrounding formation. The monitoring wells were purged using 2-inch diameter Grundfos Redi-Flo2 submersible pumps equipped with disposable virgin tubing.

In accordance with standard sampling procedures, the pH, EC, temperature, and turbidity of the ground water were measured initially and after the removal of each successive casing volume. Casing volumes were calculated based on the well diameter and the height of the water column in the well casing. The actual volume of water extracted was measured in containers of known capacity. Typically, well purging continued until three casing volumes had been removed from the well or until the well had been pumped dry. Copies of the Field Ground Water Monitoring Forms are included in Appendix A. Stabilized pH, EC, temperature, and turbidity measurements are summarized in Table 4.

3.3.2 Sample Collection

On completion of purging and field measurements in each of the monitoring wells, ground water samples were collected from the disposable tubing using the Redi-Flo2 pumps, which were reset to a flow rate of approximately 100 ml/minute. The samples were collected in laboratory-supplied 40 ml, "zero head-space," glass vials with Teflon-lined septa and preserved with hydrochloric acid for VOC analysis.

As part of the quality assurance/quality control (QA/QC), one "blind" duplicate sample was collected from monitoring well MW-14 and one laboratory duplicate from Well MW-15 for analysis of VOCs. Other QA/QC samples collected for the analysis of VOCs included one equipment decontamination blank sample from the pump after it was thoroughly cleaned and rinsed, and a field rinse water blank sample. The results of the QA/QC samples are discussed in Section 3.5.

Immediately upon collection, the sample containers were labeled and placed on ice in coolers. The samples were transported from the site to Columbia Analytical Services Inc. (Columbia Analytical) of Canoga Park, California. Standard chain-of-custody procedures were followed from sample collection to delivery to Columbia Analytical.

3.4 GROUND WATER QUALITY

All ground water samples were analyzed for VOCs using U.S. Environmental Protection Agency (EPA) Method 8260. The results of the VOC analyses are summarized in Table 5 and are included in the historical ground water quality data (Appendix C). The certificates of analyses and chain-of-custody records, as received from Columbia Analytical and subcontracted laboratories, are provided in Appendix D.

3.4.1 VOCs

Based on concentration and distribution, the water quality data indicate that the principal compounds detected in ground water are trichloroethene (TCE), tetrachloroethene (PCE), 1,2-dichloroethane (1,2-DCA), and 1,1-dichloroethene (1,1-DCE). Consistent with the historical water quality data, the highest concentrations of TCE, PCE, 1,2-DCA, and 1,1-DCE were detected in wells located north and west of the West Warehouse (Wells MW-1, MW-5, MW-6,

and MW-7). In the fourth quarter of 2005, the maximum concentrations of TCE (2,800 µg/l), PCE (750 µg/l), 1,2-DCA (17 µg/l), and 1,1-DCE (130 µg/l) were detected in Well MW-5. Upgradient Well MW-11, located off-site approximately 250 feet from the northwestern site boundary, contained TCE (15 µg/l), PCE (1.1 µg/l), and 1,1-DCE (3.7 µg/l). Crossgradient Well MW-8 to the east contained TCE (14 µg/l), PCE (5.8 µg/l), and 1,1-DCE (3.0 µg/l). Crossgradient Well MW-12, located approximately 200 feet west of the site contained TCE (6.7 µg/l), PCE (0.97 µg/l), and 1,1-DCE (1.5 µg/l). TCE was detected in Well MW-14, the furthest downgradient well, at a concentration of 0.8 µg/l. The highest VOC concentrations off-site were detected in Well MW-15, located approximately 200 feet south of the site. Well MW-15 contained detectable concentrations of TCE (550 µg/l), PCE (55 µg/l), and 1,1-DCE (31 µg/l). Isoconcentration maps of TCE and PCE, using the fourth quarter of 2005 water quality data, are presented in Figures 5 and 6, respectively.

Temporal changes in concentrations of TCE and PCE in Wells MW-7 (along the northern property boundary), MW-4 (downgradient), and MW-5 (center of plume) are presented in Figure 7. TCE concentration in Well MW-7 decreased this quarter to a level consistent with historical concentrations. TCE concentrations increased in Well MW-5 to a historical high. There was little change in TCE concentration in Well MW-4. PCE concentrations do not appear to have changed significantly this quarter in Well MW-4 and MW-7, although Well MW-5 showed an increase for the second consecutive quarter. In most of the remaining on-site wells, PCE, TCE, 1,1-DCE, and 1,2-DCA concentrations have remained relatively steady since December 2003. However, VOC concentrations in Well MW-3 have shown variation over time. The VOC concentrations since December 2004 are significantly lower than measurements from the first three monitoring events of 2004. The historical data shows that ground water quality conditions in Wells MW-10 through MW-15, initially sampled in the first quarter of 2004, are generally stable with no apparent increasing or decreasing trends.

Other VOCs detected in ground water in the fourth quarter of 2005 include 1,1,2-trichloro-1,2,2-trifluoroethane (Freon 113), trichlorofluoromethane, and cis-1,2-dichlorethene. Historical VOC concentrations are presented in Appendix C.

3.5 QUALITY ASSURANCE/QUALITY CONTROL MEASURES

Several QA/QC measures were implemented to provide qualitative and quantitative checks on data. These measures were conducted in general accordance with the Sampling and Analysis Plan, Revision 2 (England Geosystem, December 15, 2003) previously submitted to DTSC. QA/QC measures included a blind duplicate sample collected from Well MW-14, one laboratory duplicate analysis on the sample collected from Well MW-15, one equipment decontamination blank, a field rinse water blank, and a trip blank. Other laboratory QA/QC measures included the analysis of method blank samples, surrogate recoveries, matrix spike/matrix spike duplicate recoveries, and laboratory control sample analyses. The results of these QA/QC measures, including the blank sample analyses, data precision, and accuracy, are discussed below.

3.5.1 Blank Sample Analyses

Samples analyzed as part of the overall QA/QC program included method, equipment decontamination, field rinse water, and trip blank samples. The method blank sample, analyzed using EPA Method 8260, did not contain detectable concentrations of VOCs. The equipment blank sample contained bromoform at a concentrations of 1.0 µg/l. The source of the bromoform is believed to be the municipal water supply. The field rinse water sample, collected from the municipal water supply at the site, contained chloroform, bromodichloromethane, dibromochloromethane, and bromoform at concentrations of 9.6, 14, 12 and 3.3 µg/l, respectively.

3.5.2 Data Precision

Data precision may be defined as a measure of mutual agreement among individual similar conditions. For the Univar project, data precision was evaluated by the analysis of laboratory and field duplicate samples expressed in terms of percentage difference. A laboratory duplicate is a duplicate analysis performed by the laboratory on the same sample as the original analysis. A field duplicate is a sample collected in the field, from the same source, using identical sampling procedures. The field duplicate sample was analyzed by the same laboratory using standard EPA analytical methods, but was submitted blind and referred to as QA/QC-1 in November 2005. The monitoring wells used for duplicate analyses and the precision for the field and laboratory duplicates are presented in Table 6. As shown in Table 6, data precision for the duplicates ranged from 0 to 6 percent.

3.5.3 Data Accuracy

Data accuracy may be defined as the degree of agreement of a measurement with an accepted reference or true value. Data accuracy is evaluated by the analysis of surrogate recovery samples and matrix QC samples. The calculated percentage recovery of the spiking compound is taken as a measure of the accuracy of the total analytical method. The tolerance limits for acceptable percent recovery vary according to the analytical method and the spike compound(s). Two compounds were measured outside the percent recovery acceptance range in three laboratory control samples. However, the laboratory concluded that the percent recoveries calculated for the compounds would not significantly affect the sample data. The “Case Narrative” from the laboratory is included with the certificates of analyses attached as Appendix D.

3.6 INVESTIGATION-DERIVED WASTES (IDWS)

During ground water monitoring for the fourth quarter of 2005, approximately 400 gallons of purged ground water and decontamination rinsate water were generated and temporarily contained in 55-gallon poly-drums. These drums were labeled and temporarily stored at the site pending receipt of the results of composite water sample analyses. All IDWs associated with ground water monitoring were properly handled by Univar.

4.0 INTERIM REMEDIAL MEASURES

The overall objective of the interim remedial measures is to develop and implement a strategy that would mitigate, as necessary, contaminant-impacted soil, soil vapor, and ground water to levels that would be protective of human health and the environment, and to control the spread of contaminants while long-term corrective action alternatives are being evaluated. Available site-specific information has been utilized to identify if there are any potential threats to human health and/or the environment and whether the potential for the spread of VOCs at the facility could be controlled or abated. After evaluating the data, it was determined that mitigation of VOC vapors in soil using soil vapor extraction and treatment (SVET) is the most appropriate interim measure for the site.

In March 2005, Rubicon completed construction of the SVET system, capable of handling a flow rate up to 1,000 cubic feet per minute (cfm). The SVET system consists of a 50 hp vapor extraction blower with a variable frequency drive that allows the flow rate to be adjusted between 380 and 1,000 scfm. Figure 8 presents the SVET system schematic flow diagram. Soil vapor is currently being extracted from 16 vapor extraction wells and 3 ground water monitoring wells. At all 16 vapor extraction well locations, well casings have been screened within the A Zone (upper vadose zone from 0 to 45 feet bgs), having perforated intervals from approximately 25 to 45 feet bgs. Vapor well locations VW-9 through VW-14 are cluster wells, having an additional well casing screened from 55 to 85 feet bgs within the B Zone (lower vadose zone from 55 feet to approximately 90 feet bgs). The three ground water monitoring wells included in the extraction network also have perforations in the B Zone. Specifically, Wells MW-3, MW-5, and MW-6 are perforated from 80 to 105 feet bgs.

In addition to the existing vapor extraction wells, perforated vapor extraction piping was installed horizontally in a trench near the western site boundary. Specifically, approximately 250 feet of 4-inch diameter, Schedule 40 PVC pipe, perforated with 0.020 inch slots was installed at an approximate depth of 5.5 feet in the trench. The trench location is shown in Figure 9.

Several vapor monitoring wells, VW-17 through VW-28, have been installed at the site to assist with monitoring the effectiveness of the SVET system. The vapor monitoring well locations are shown in Figure 10. All of the vapor monitoring wells are multi-casing wells with screened intervals within the A Zone and/or the B Zone. A summary of well completion details including screened-intervals of the individual casings are provided in Table 2. In addition, certain ground water monitoring wells are included in the monitoring network as each of the wells have portions of well screen perforated above the water table. Specifically, Wells MW-11 and MW-12, located off site to the north and west, respectively, have been included in B-Zone monitoring of the SVET system.

A total of four vapor-phase granular activated carbon (GAC) vessels, used in series, have been installed to remove VOCs from the extracted soil vapor by adsorption. Each GAC vessel contains 8,000 pounds of carbon. The treatment system, therefore, features a total of 32,000 pounds of carbon. The GAC vessels have been located in the northwest corner of the site to allow for ease of carbon change-outs (Figure 9). The GAC vessels are capable of handling an air flow rate up to 3,500 cfm with a maximum vacuum of 15 inches of mercury (204 inches of water).

4.1 SOIL VAPOR MONITORING

During the fourth quarter of 2005, vapor monitoring was conducted from the vapor monitoring wells, extraction wells, and the extraction trench in accordance with the *Soil Remediation – Vapor Monitoring Plan, Revision 1* (Rubicon, April 21, 2005). Vapor monitoring was conducted on November 3 and 4, 2005 and included measurements of total organic carbon (TOC) using a photo-ionization detector (PID), vapor flow rate measurements, vacuum readings, and sample collection for VOC analysis. PID measurements, vapor flow rates, and vacuum readings are provided with the field forms in Appendix A.

For the vapor monitoring wells, and based on past purge-volume testing conducted at the site, approximately three casing volumes were purged prior to collecting samples from each individual well casing. Casing volumes were calculated using the total depth and diameter of each well casing. Samples were collected from the wells after purging with a sampling pump fitted with a flow gauge. For vapor extraction wells, no purging was necessary. For each well, soil vapor samples were collected in Tedlar sample bags for PID measurement.

Vapor samples for laboratory analyses were collected into SUMMA canisters from vapor extraction well VW-12 and from vapor monitoring wells VW-17 and VW-19 through VW-26. Following standard chain-of-custody procedures, the SUMMA canister samples were submitted to Columbia Analytical for TO-15 analysis. A summary of laboratory analyses are presented in Table 7. Review and comparison of the soil vapor data collected in March/April, July, and November 2005 show a decreasing trend.

4.2 SVET SYSTEM OPERATION

The SVET system was operated in startup mode during the fourth quarter 2005 with the initial startup and shakedown of the SVET system beginning on April 4, 2005. During the first five days of startup operation, the SVET system was monitored daily. Thereafter, system monitoring continued on no less than on a weekly basis. Monitoring included measurement of vacuum levels and vapor flow rates at various locations. Vapor flow rates were determined using a portable thermal anemometer. Monitoring also included field measurements of TOC concentrations at the inlet to the SVET system, and at the outlet from each of the four carbon vessels. Field TOC measurements were performed using a PID calibrated with hexane. A summary of the field monitoring data is presented in Table 8. Influent and effluent samples from

the SVET system are collected in SUMMA canisters on a monthly basis and submitted to Columbia Analytical for TO-15 analysis. A historical summary of the analytical results is presented in Table 9. The total mass of VOCs recovered by the SVET system is estimated at 4,891 pounds through December 2005.

4.2.1 Fourth Quarter 2005

The field monitoring data show that the total soil-vapor extraction flow rates have ranged from 265 to 455 scfm. The TOC concentration at the outlet from the final carbon vessel (Station VCV4-OUT) has ranged from 0.0 ppmv to 10.0 ppmv, consistently below the SCAQMD permit limit of 15 ppmv. During the fourth quarter 2005, the SVET system was shut down from December 2 through 12, 2005 because of elevated PID readings at the tertiary GAC vessel. Following carbon change-out on December 12, 2005, the system was restarted. Additionally, the SVET system was temporarily shut down on October 31, 2006 for carbon change out. Total operation time of the SVET system through the fourth quarter of 2005 was approximately 1,943 hours out of a possible 2,209 hours or 88 percent. The total mass of VOCs recovered by the SVET systems in the fourth quarter is estimated at 714 pounds.

REFERENCES

Department of Toxic Substances Control, February 14, 2002, "Corrective Action Consent Agreement (Docket HWCA 94/95-072), Vopak USA Inc. Facility, 5353 Jillson Street, Commerce, California."

Department of Toxic Substances Control, January 15, 2003, "Comments and Suggestions on the Draft Phase II RCRA Facility Investigation Workplan (Dated July 15, 2002) , Univar USA Inc. (Formerly Vopak USA Inc.) 5353 Jillson Street, Commerce."

Department of Toxic Substances Control, September 11, 2003, "Review of the Sampling and Analysis Plan and Comments on the Summary of Proposed Program for the Former Univar USA, Inc. Jillson Street Facility in Commerce, California." Includes comments from the Human and Ecological Risk Division.

Department of Toxic Substances Control, September 12, 2003, "Review of Figure 1, Monitoring Locations, and Table 1, Summary of Proposed Program, for the Addendum to Phase II RCRA Facility Investigation Work Plan."

England Geosystem, Inc., January 29, 2002, *Clarifier Closure Report, Vopak USA Inc., 5353 Jillson Street, Los Angeles, California*. Submitted to the Los Angeles County Department of Public Works.

England Geosystem, Inc., April 29, 2002, *RCRA Hazardous Waste Container Storage Area Closure, Vopak USA Inc., 5353 Jillson Street, Commerce, California*. Submitted to DTSC.

England Geosystem, Inc., May 20, 2002, *Current Conditions Report, Vopak USA Inc., 5353 Jillson Street, Los Angeles, California*. Submitted to DTSC.

England Geosystem, Inc., November 12, 2002. *Draft Phase II RCRA Facility Investigation, Univar USA, 5353 Jillson Street, Commerce, California*. Submitted to DTSC.

England Geosystem, Inc., December 18, 2002. *Additional Phase II RCRA Facility Investigation Activities, Univar USA, 5353 Jillson Street, Commerce, California*. Prepared for Univar and submitted to DTSC.

England Geosystem, Inc., September 30, 2003, *Interim Soil Remedial Measures Work Plan – (Revision 1), Former Univar USA Inc. Facility, 5353 Jillson Street, Commerce, California*. Prepared for Univar and submitted to DTSC.

England Geosystem, Inc., October 2, 2003, *Work Plan Addendum, Phase II RCRA Facility Investigation, Former Univar USA Inc. Facility, 5353 Jillson Street, Commerce, California*. Prepared for Univar and submitted to DTSC.

England Geosystem, Inc., December 15, 2003, S*ampling and Analysis Plan, Revision 2, Former Univar USA Inc. Facility, 5353 Jillson Street, Commerce, California.* Prepared for Univar and submitted to DTSC.

Rubicon Engineering Corporation, April 21, 2005, *Soil Remediation – Vapor Monitoring Plan (Revision 1), Former Univar USA Inc. Facility, 5353 Jillson Street, Commerce, California*. Prepared for Univar and submitted to DTSC.

Rubicon Engineering Corporation, October 10, 2005, *Draft Soil Vapor Extraction/Treatment System Startup Report, Former Univar USA Inc. Facility, 5353 Jillson Street, Commerce, California*. Prepared for Univar and submitted to DTSC.

Rubicon Engineering Corporation, December 9, 2005, *Progress Report – Third Quarter 2005, Subsurface Characterization and Interim Remediation, Former Univar USA Inc. Facility, 5353 Jillson Street, Commerce, California*. Prepared for Univar and submitted to DTSC.

Rubicon Engineering Corporation, January 12, 2006, *Work Plan for Drilling an Exploratory Boring and Well Installation, Subsurface Characterization, Former Univar USA Inc. Facility, 5353 Jillson Street, Commerce, California, (Docket HWCA P1-01/02-004).* Prepared for Univar and submitted to DTSC.

Rubicon Engineering Corporation, January 17, 2006, *As-Built Report and Operation and Maintenance Plan, Interim Soil Remediation, (Revision 0), Former Univar USA Inc. Facility, 5353 Jillson Street, Commerce, California.* Prepared for Univar and submitted to DTSC.

Rubicon Engineering Corporation, January 19, 2006, *Report, Soil Vapor Extraction/Treatment System Startup, Interim Soil Remediation, (Revision 1), Former Univar USA Inc. Facility, 5353 Jillson Street, Commerce, California*. Prepared for Univar and submitted to DTSC.

Rubicon Engineering Corporation, January 31, 2006, *Indoor Air Sampling and Analysis Report, (Revision 0), Former Univar USA Inc. Facility, 5353 Jillson Street, Commerce, California*. Prepared for Univar and submitted to DTSC.

Tables

TABLE 1
ANTICIPATED SCHEDULE
RCRA FACILITY INVESTIGATION AND CORRECTIVE MEASURES STUDY
FORMER UNIVAR USA INC. FACILITY
5353 JILLSON STREET
COMMERCE, CALIFORNIA
(Revised March 31, 2006)

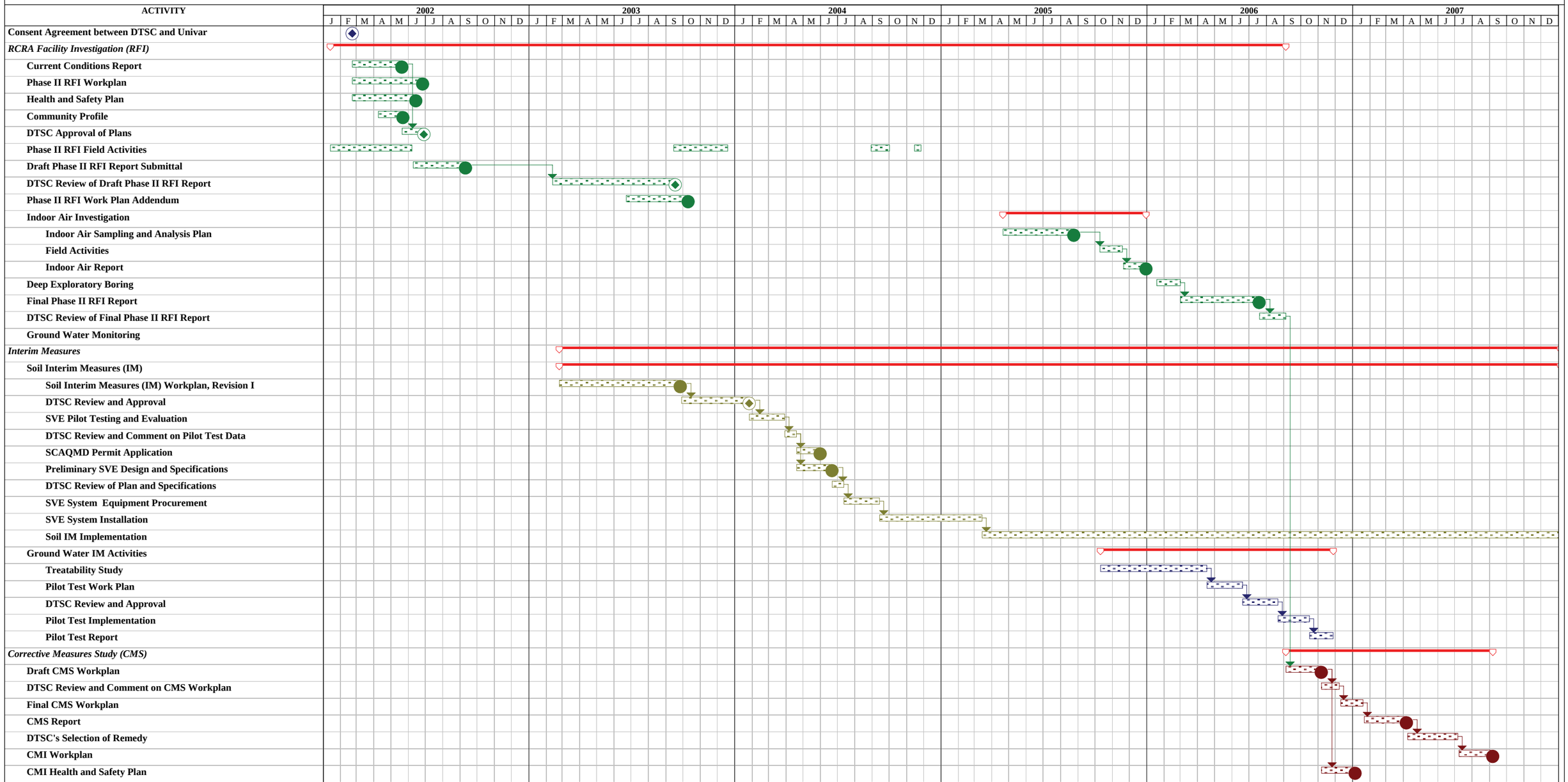

Project:P:\1001 Univar\02 Jillson\RFI_CMS Schedule.m
Date: Tue 5/9/06

Task | Agency Milestone | Summary | Consultant Submittal

RUBICON
Engineering Corporation

Table 2

Well Completion Details

Former Univar USA Inc. Facility

5353 Jillson Street, Commerce, California

Well Name	Easting	Northing	Surface Elevation	Reference Elevation	Boring Depth	Screen Top Depth	Screen Base Depth	Casing Diameter	Screen Slot Size	Well Material
	(feet)	(feet)	(feet MSL)	(feet MSL)	(feet)	(feet)	(feet)	(in.)	(in.)	
Ground Water Monitoring Wells										
MW-1	6,512,172.04	1,823,511.80		142.56	130.0	80	105	2	0.020	Sch 40 PVC
MW-2	6,512,408.18	1,823,278.91		142.63	105.0	80	105	4	0.010	Sch 80 PVC
MW-3	6,512,089.51	1,823,744.39		145.95	105.0	80	105	4	0.010	Sch 80 PVC
MW-4	6,512,019.20	1,823,427.22		144.31	105.0	80	105	4	0.010	Sch 80 PVC
MW-5	6,512,239.99	1,823,690.66		143.12	105.5	80	105	4	0.010	Sch 80 PVC
MW-6	6,512,234.51	1,823,608.85		142.72	107	80	105	4	0.010	Sch 80 PVC
MW-7	6,512,380.31	1,823,703.06		142.70	109	80	105	4	0.010	Sch 80 PVC
MW-8	6,512,830.12	1,823,521.87		142.98	105	78	103	4	0.010	Sch 80 PVC
MW-9	6,512,576.52	1,823,614.42		143.03	105	80	105	4	0.010	Sch 80 PVC
MW-10	6,512,081.21	1,823,587.04		144.94	105	85	105	4	0.010	Sch 80 PVC
MW-11	6,512,324.29	1,823,965.12		145.99	105	85	105	4	0.010	Sch 80 PVC
MW-12	6,511,939.24	1,823,885.69		145.69	105	85	105	4	0.010	Sch 80 PVC
MW-13	6,511,671.96	1,823,540.40		144.93	105	85	105	4	0.010	Sch 80 PVC
MW-14	6,511,592.37	1,823,063.79		144.19	110	85.5	105.5	4	0.010	Sch 80 PVC
MW-15	6,512,065.39	1,823,179.47		143.17	105	85	105	4	0.010	Sch 80 PVC
Vapor Extraction Wells										
VW-1	6,512,136.02	1,823,743.44	145.81	145.41	90	25	45	2	0.020	Sch 40 PVC
VW-2	6,512,120.80	1,823,707.07	145.55	145.34	90	25	45	2	0.020	Sch 40 PVC
VW-3	6,512,108.59	1,823,652.50	145.53	145.18	90	24	44	2	0.020	Sch 40 PVC
VW-4	6,512,093.35	1,823,597.94	145.30	144.88	90	24	44	2	0.020	Sch 40 PVC
VW-5	6,512,072.07	1,823,561.58	145.47	145.10	90	24	44	2	0.020	Sch 40 PVC
VW-6	6,512,205.74	1,823,750.60	145.11	144.77	90	24	44	2	0.020	Sch 40 PVC
VW-7	6,512,175.29	1,823,663.31	144.51	144.19	82.0	24	44	2	0.020	Sch 40 PVC
VW-8	6,512,147.90	1,823,594.21	144.50	143.95	88.5	25	45	2	0.020	Sch 40 PVC
VW-9A	6,512,263.24	1,823,699.56	143.78	143.42	89.5	25	45	2	0.020	Sch 40 PVC
VW-9B	6,512,263.24	1,823,699.56	143.78	143.52	89.5	58	88	2	0.020	Sch 40 PVC
VW-10A	6,512,229.86	1,823,674.14	143.67	143.30	85.0	25	45	2	0.020	Sch 40 PVC
VW-10B	6,512,229.86	1,823,674.14	143.67	143.33	85.0	55	85	2	0.020	Sch 40 PVC
VW-11A	6,512,241.90	1,823,623.17	143.52	143.16	89.0	24	44	2	0.020	Sch 40 PVC
VW-11B	6,512,241.90	1,823,623.17	143.52	143.16	89.0	57	87	2	0.020	Sch 40 PVC
VW-12A	6,512,333.00	1,823,724.92	143.32	143.17	86.5	19	39	2	0.020	Sch 40 PVC
VW-12B	6,512,333.00	1,823,724.92	143.32	143.20	86.5	55	85	2	0.020	Sch 40 PVC
VW-13A	6,512,487.46	1,823,659.16	143.22	142.65	86.5	24	44	2	0.020	Sch 40 PVC
VW-13B	6,512,487.46	1,823,659.16	143.22	142.63	86.5	54	84	2	0.020	Sch 40 PVC
VW-14A	6,512,566.18	1,823,604.45	144.15	143.77	88.0	25	45	2	0.020	Sch 40 PVC
VW-14B	6,512,566.18	1,823,604.45	144.15	143.79	88.0	55	85	2	0.020	Sch 40 PVC
VW-15	6,512,508.42	1,823,499.01	144.65	144.19	81.0	22	42	2	0.020	Sch 40 PVC
VW-16	6,512,471.91	1,823,411.72	144.02	143.43	90.0	24	44	2	0.020	Sch 40 PVC
VW-17A1	6,512,199.46	1,823,615.96	143.56	143.20	90.0	6	8	1	0.010	Sch 40 PVC
VW-17A2	6,512,199.46	1,823,615.96	143.56	143.10	90.0	28	30	1	0.010	Sch 40 PVC
VW-17A3	6,512,199.46	1,823,615.96	143.56	143.13	90.0	36	38	1	0.010	Sch 40 PVC
VW-17B1	6,512,199.46	1,823,615.96	143.56	143.11	90.0	69	71	1	0.010	Sch 40 PVC
VW-17B2	6,512,199.46	1,823,615.96	143.56	143.16	90.0	82	84	1	0.010	Sch 40 PVC

Table 2

Well Completion Details

Former Univar USA Inc. Facility

5353 Jillson Street, Commerce, California

Well Name	Easting	Northing	Surface Elevation	Reference Elevation	Boring Depth	Screen Top Depth	Screen Base Depth	Casing Diameter	Screen Slot Size	Well Material
	(feet)	(feet)	(feet MSL)	(feet MSL)	(feet)	(feet)	(feet)	(in.)	(in.)	
Vapor Monitoring Wells										
VW-18A1	6,512,247.99	1,823,641.36	143.64	143.54	85.0	5	7	1	0.010	Sch 40 PVC
VW-18A2	6,512,247.99	1,823,641.36	143.64	143.48	85.0	32	34	1	0.010	Sch 40 PVC
VW-18A3	6,512,247.99	1,823,641.36	143.64	143.49	85.0	39	41	1	0.010	Sch 40 PVC
VW-18B1	6,512,247.99	1,823,641.36	143.64	143.55	85.0	69	71	1	0.010	Sch 40 PVC
VW-18B2	6,512,247.99	1,823,641.36	143.64	143.52	85.0	81	83	1	0.010	Sch 40 PVC
VW-19A1	6,512,095.85	1,823,782.66		145.37	35.0	5	10	1	0.020	Sch 40 PVC
VW-19A2	6,512,095.99	1,823,782.55		145.29	35.0	30	35	1	0.020	Sch 40 PVC
VW-20A1	6,512,082.67	1,823,703.95		145.20	35.0	5	10	1	0.020	Sch 40 PVC
VW-20A2	6,512,082.51	1,823,703.76		145.35	35.0	30	35	1	0.020	Sch 40 PVC
VW-21A1	6,511,955.34	1,823,667.37		145.05	10.0	5	10	1	0.020	Sch 40 PVC
VW-21A2	6,511,955.00	1,823,667.56		145.10	40.0	30	40	1	0.010	Sch 40 PVC
VW-22A1	6,512,005.84	1,823,709.87		145.17	10.0	5	10	1	0.010	Sch 40 PVC
VW-22A2	6,512,006.06	1,823,710.12		145.18	40.0	30	40	1	0.010	Sch 40 PVC
VW-23A1	6,511,988.90	1,823,773.97		145.04	10.0	5	10	1	0.010	Sch 40 PVC
VW-23A2	6,511,989.23	1,823,774.14		145.02	40.0	30	40	1	0.010	Sch 40 PVC
VW-24A1	6,512,151.33	1,823,826.54		145.43	10.0	5	10	1	0.010	Sch 40 PVC
VW-24A2	6,512,151.52	1,823,826.21		145.43	40.0	30	40	1	0.010	Sch 40 PVC
VW-25A1	6,512,035.48	1,823,488.52		144.99	10.0	5	10	1	0.010	Sch 40 PVC
VW-25A2	6,512,035.64	1,823,488.24		144.99	40.0	30	40	1	0.010	Sch 40 PVC
VW-26A1	6,512,096.08	1,823,625.56		145.13	10.0	5	10	1	0.010	Sch 40 PVC
VW-26A2	6,512,096.42	1,823,625.58		145.08	40.0	30	40	1	0.010	Sch 40 PVC
VW-27A1	6,512,335.40	1,823,616.90		146.70	80.0	5	10	1	0.010	Sch 40 PVC
VW-27A2	6,512,335.80	1,823,616.90		146.70	80.0	35	45	1	0.010	Sch 40 PVC
VW-27B	6,512,335.44	1,823,617.01		146.71	80.0	75	85	1	0.010	Sch 40 PVC
VW-28A1	6,512,440.95	1,823,545.63		146.57	80.0	5	10	1	0.010	Sch 40 PVC
VW-28A2	6,512,441.25	1,823,545.83		146.62	80.0	35	45	1	0.010	Sch 40 PVC
VW-28B	6,512,441.23	1,823,545.45		146.64	80.0	75	85	1	0.010	Sch 40 PVC

P:\1001 Univar\02 Jillson\Progress Reports\2005 4Q Progress Report\[4q05 Tables.xls]Tbl 2 SV Well Completion

Table 3

Ground Water Level Data
Fourth Quarter 2005
Former Univar USA Inc. Facility
5353 Jillson Street, Commerce, California

Well	Date	Reference Elevation (feet MSL)	Depth to Water (feet)	Water Level Elevation (feet MSL)
MW-1	11/07/05	142.57	87.49	55.08
MW-2	11/07/05	142.66	88.05	54.61
MW-3	11/07/05	145.99	90.09	55.90
MW-4	11/07/05	144.30	89.72	54.58
MW-5	11/07/05	143.14	85.59	57.55
MW-6	11/07/05	142.74	87.39	55.35
MW-7	11/07/05	142.75	86.47	56.28
MW-8	11/07/05	143.01	86.51	56.50
MW-9	11/07/05	143.08	86.58	56.50
MW-10	11/07/05	144.94	89.39	55.55
MW-11	11/07/05	145.99	88.62	57.37
MW-12	11/07/05	145.69	89.57	56.12
MW-13	11/07/05	144.93	90.52	54.41
MW-14	11/07/05	144.19	91.80	52.39
MW-15	11/07/05	143.17	89.37	53.80

P:\1001 Univar\02 Jillson\Progress Reports\2005 4Q Progress Report\[4q05 Tables.xls]Tbl 3 Water Levels

Table 4

Summary of Field Water Quality Parameters
Fourth Quarter 2005
Former Univar USA Inc. Facility
5353 Jillson Street, Commerce, California

Well	Date Collected	pH	Conductivity (µmohs/cm)	Temperature (°F)	Turbidity (NTUs)
MW-1	11/09/05	7.42	972	72.5	27
MW-2	11/07/05	7.32	877	76.2	4.4
MW-3	11/07/05	7.21	982	76.7	72
MW-4	11/09/05	7.47	785	72.6	9.4
MW-5	11/10/05	7.19	2,446	74.7	14
MW-6	11/09/05	7.40	1,079	71.7	14
MW-7	11/10/05	7.31	1,038	71.7	15
MW-8	11/07/05	7.32	1,035	76.9	75
MW-9	11/09/05	7.44	930	73.5	11
MW-10	11/09/05	7.37	822	72.7	10
MW-11	11/08/05	7.38	1,024	72.6	4.8
MW-12	11/08/05	7.33	1,147	72.3	2.9
MW-13	11/08/05	7.37	944	72.9	22
MW-14	11/08/05	7.39	1,042	74.1	5.7
MW-15	11/08/05	7.39	1,062	75.1	5.2

P:\1001 Univar\02 Jillson\Progress Reports\2005 4Q Progress Report\[4q05 Tables.xls]Tbl 4 Field Parameters

Table 5

Summary of Organic Compounds in Ground Water
Fourth Quarter 2005
(Concentrations are micrograms per liter, ug/L)
Former Univar USA Inc. Facility
5353 Jillson Street, Commerce, California

Well No.	Date Collected	1,1,2-Trichloro-1,2,2-trifluoroethane	1,1-Dichloroethane	1,1-Dichloroethene	1,2-Dichloroethane	Chloroform	cis-1,2-Dichloroethene	Tetrachloroethene	Trichloroethene	Trichlorofluoromethane
MW-1	11/09/05	**25**	<5	**39**	<5	<5	<5	**49**	**580**	<10
MW-2	11/07/05	**4.0**	<0.5	**6.8**	**0.68**	<0.5	<0.5	**7.7**	**44**	**1.5**
MW-3	11/07/05	**8.7**	<0.5	**0.57**	<0.5	<0.5	<0.5	**0.94**	**3.4**	<1
MW-4	11/08/05	<10	<2.5	**17**	**3.8**	<2.5	<2.5	**17**	**120**	<5
MW-5	11/10/05	<40	**18**	**130**	**17**	**18**	**36**	**750**	**2,800**	<20
MW-6	11/09/05	**43**	<5	**30**	<5	**6.1**	**5.7**	**62**	**630**	<10
MW-7	11/10/05	**99**	<2.5	**54**	**3.5**	**3.0**	**8.4**	**220**	**940**	<5
MW-8	11/07/05	**20**	<0.5	**3.0**	<0.5	<0.5	<0.5	**5.8**	**14**	**3.4**
MW-9	11/08/05	**86**	<0.5	**9.8**	<0.5	<0.5	<0.5	**11**	**66**	**3.3**
MW-10	11/09/05	<10	<2.5	**41**	<2.5	<2.5	<2.5	**55**	**210**	<5
MW-11	11/08/05	**39**	<0.5	**3.7**	<0.5	<0.5	<0.5	**1.1**	**15**	<1
MW-12	11/08/05	<2	<0.5	**1.5**	<0.5	<0.5	<0.5	**0.97**	**6.7**	<1
MW-13	11/08/05	<2	<0.5	**2.6**	<0.5	<0.5	<0.5	**10**	**41**	<1
MW-14	11/08/05	<2	<0.5	<0.5	<0.5	<0.5	<0.5	<0.5	**0.8**	<1
	11/08/05	<2	<0.5	<0.5	<0.5	<0.5	<0.5	<0.5	**0.8**	<1
MW-15	11/08/05	<20	<5	**31**	<5	<5	<5	**53**	**520**	<10
	11/08/05	<10	<2.5	**31**	**3.5**	**3.1**	<2.5	**55**	**550**	<5

P:\1001 Univar\02 Jillson\Progress Reports\2005 4Q Progress Report\[4q05 Tables.xls]Tbl 5 VOCs

Table 6

Field and Laboratory Duplicate Sample Analysis
Fourth Quarter 2005
Former Univar USA Inc. Facility
5353 Jillson Street, Commerce, California

Well No.	Date Collected	Duplicate Type	Compound	Original Sample[1] (ug/L)	Duplicate Sample[2] (ug/L)	Relative Percentage Difference[3] (%)
MW-14	11/08/05	Field	Trichloroethene	0.8	0.8	0
MW-15	11/08/05	Lab	1,1-Dichloroethene	31	31	0
			Tetrachloroethene	53	55	4
			Trichloroethene	520	550	6

NOTES: (1) Original sample analyzed by Columbia Analytical Services, Inc. (Columbia Analytical) using EPA Method 8260.
(2) Duplicate sample analyzed by Columbia Analytical using EPA Method 8260.
(3) Relative Percentage Difference calculated as:

$$RPD = \frac{|D_1 - D_2|}{(D_1 + D_2)/2} \times 100$$

where D_1 = Original sample result.
D_2 = Duplicate Sample Result

P:\1001 Univar\02 Jillson\Progress Reports\2005 4Q Progress Report\[4q05 Tables.xls]Tbl 6 QAQC

Table 7

History of VOC Concentrations in Soil Vapor
Former Univar USA Inc. Facility
5353 Jillson Street, Commerce, California
(all units are in parts per billion - ppbv)

Station Name	Date Collected	Summation of total VOCs	Percent Change from Initial Monitoring	1,1,1-Trichloroethane	1,1,2-Trichloro-1,2,2-trifluoroethane	1,1,2-Trichloroethane	1,1-Dichloroethane	1,1-Dichloroethene	1,2-Dichloroethane	1,4-Dioxane	Acetone	Benzene	Bromodichloromethane	Carbon Disulfide	Carbon Tetrachloride	Chlorobenzene	Chloroform	cis-1,2-Dichloroethene	Ethylbenzene	m,p-Xylenes	Methyl Ethyl Ketone	Methyl Isobutyl Ketone	Methyl tert-Butyl Ether	Methylene Chloride	o-Xylene	Styrene	Tetrachloroethene	Toluene	trans-1,2-Dichloroethene	Trichloroethene	Trichlorofluoromethane	Vinyl Acetate	Vinyl Chloride
MW-3	03/30/05	1,293,000		35,000	<13,000	<18,000	<25,000	150,000	<25,000	<28,000	<210,000	<31,000	<15,000	<32,000	<16,000	<22,000	<20,000	<25,000	<23,000	<23,000	<34,000	<24,000	<28,000	<29,000	<23,000	<23,000	630,000	78,000	<25,000	400,000	<18,000	<28,000	<39,000
	07/20/05	923	99.9	<18	23	<18	<25	<25	40	<28	<210	<31	<15	<32	<16	<22	<20	<25	<23	<23	<34	<24	<28	<29	<23	<23	170	<27	<25	690	1,700	<28	<39
MW-5	03/31/05	6,766		<46	170	<46	<62	620	<62	<69	<530	<78	<37	100	<40	<54	<51	84	<58	<58	<85	<61	<69	<72	<58	<59	2,700	92	<63	3,000	<45	<71	<98
	07/20/05	727	89.2	<0.92	9.2	<0.92	2.3	40	61	<1.4	<11	22	<0.75	14	3.2	<1.1	5.6	13	4.7	22	150	35	<1.4	1.8	7.8	<1.2	100	5.8	<1.3	230	160	<1.4	<2
MW-6	03/31/05	457,700		<3,700	9,700	<3,700	<4,900	78,000	<4,900	<5,600	<42,000	<6,300	<3,000	<6,400	<3,200	<4,300	<4,100	<5,000	<4,600	<4,600	<6,800	<4,900	<5,500	<5,800	<4,600	<4,700	190,000	<5,300	<5,000	180,000	<3,600	<5,700	<7,800
	07/20/05	30,500	93.3	<180	1,400	<180	<250	5,300	<250	<280	<2,100	<310	<150	<320	<160	<220	<200	<250	<230	<230	<340	<240	<280	<290	<230	<230	5,800	<270	<250	18,000	790	<280	<390
MW-11	03/31/05	143		<0.92	1.9	<0.92	<1.2	2.4	<1.2	<1.4	<11	4.6	<0.75	<1.6	<0.8	<1.1	<1	<1.3	1.2	4.0	3.5	<1.2	<1.4	12	1.4	1.6	59	12	<1.3	39	<0.89	<1.4	<2
MW-12	03/31/05	2,310		<18	260	<18	<25	110	<25	<28	<210	<31	<15	<32	<16	<22	<20	<25	<23	<23	<34	<24	<28	<29	<23	<23	440	<27	<25	1,500	<18	<28	<39
Trench-1	06/06/05	4,068		<7.3	<5.2	<7.3	<9.9	13	<9.9	<11	<84	<13	<6	<13	<6.4	<8.7	<8.2	25	<9.2	<9.2	<14	<9.8	<11	<12	<9.2	<9.4	3,700	<11	<10	330	<7.1	<11	<16
	07/21/05	4,730	-16.3	<52	<37	<52	<71	<72	<71	<79	<600	<89	<43	<92	<45	<62	<59	<72	<66	<66	<97	<70	<79	<82	<66	<67	4,300	<76	<72	430	<51	<81	<110
VW-1	03/30/05	1,304,200		15,000	<2,200	<3,100	9,100	76,000	<4,100	<4,600	<35,000	<5,200	<2,500	<5,400	<2,700	<3,600	<3,400	12,000	<3,800	<3,800	<5,700	<4,100	<4,600	5,100	<3,800	<3,900	550,000	97,000	<4,200	540,000	<3,000	<4,700	<6,500
	07/21/05	36,220	97.2	<240	<170	<240	870	3,900	440	620	<2,800	<420	<200	<430	<210	<290	<270	870	<310	<310	<450	<330	<370	<380	<310	<310	14,000	520	<340	15,000	<240	<380	<520
VW-2	03/30/05	3,434,000		100,000	<19,000	<26,000	<35,000	310,000	<35,000	<40,000	<300,000	<45,000	<21,000	<46,000	<23,000	<31,000	<29,000	<36,000	<33,000	<33,000	<48,000	<35,000	<40,000	44,000	<33,000	<34,000	1,600,000	420,000	<36,000	960,000	<25,000	<41,000	<56,000
	07/21/05	308,880	91.0	13,000	<52	340	2,000	8,600	1,700	2,300	13,000	<130	<60	<130	<64	170	400	1,400	350	1,700	3,800	210	<110	3,000	660	250	140,000	66,000	<100	50,000	<71	<110	260
VW-3	03/30/05	1,462,000		21,000	<8,700	<12,000	<16,000	220,000	<16,000	<19,000	<140,000	<21,000	<10,000	<21,000	<11,000	<14,000	<14,000	<17,000	<15,000	<15,000	<23,000	<16,000	<18,000	<19,000	<15,000	<16,000	750,000	21,000	<17,000	450,000	<12,000	<19,000	<26,000
	07/21/05	69,240	95.3	<240	270	<240	420	7,200	<330	<370	<2,800	<420	<200	<430	<210	<290	<270	350	<310	<310	<450	<330	<370	<380	<310	<310	32,000	<350	<340	29,000	2,700	<380	<520
VW-4	03/30/05	1,124,000		17,000	<8,700	<12,000	<16,000	200,000	<16,000	<19,000	<140,000	<21,000	<10,000	<21,000	<11,000	<14,000	<14,000	19,000	<15,000	<15,000	<23,000	<16,000	<18,000	<19,000	<15,000	<16,000	510,000	18,000	<17,000	360,000	<12,000	<19,000	<26,000
	07/20/05	100,520	91.1	<180	320	<180	<250	4,300	300	<280	<2,100	<310	<150	<320	<160	<220	<200	1,000	8,600	31,000	<340	<240	<280	<290	11,000	<230	16,000	10,000	<250	18,000	800	<280	<390
VW-5	03/30/05	1,121,400		23,000	8,400	<9,200	<12,000	190,000	<12,000	<14,000	<110,000	<16,000	<7,500	<16,000	<8,000	<11,000	<10,000	<13,000	<12,000	<12,000	<17,000	<12,000	<14,000	<14,000	<12,000	<12,000	520,000	30,000	<13,000	350,000	<8,900	<14,000	<20,000
	07/21/05	10,600	99.1	<180	<130	<180	<250	2,100	<250	<280	<2,100	<310	<150	<320	<160	<220	<200	<250	<230	<230	<340	<240	<280	<290	<230	<230	3,800	<270	<250	4,700	<180	<280	<390
VW-6	03/31/05	3,610,000		<24,000	<17,000	<24,000	<33,000	470,000	<33,000	<37,000	<280,000	<42,000	<20,000	<43,000	<21,000	<29,000	<27,000	840,000	<31,000	<31,000	<45,000	<33,000	<37,000	<38,000	<31,000	<31,000	1,400,000	<35,000	<34,000	900,000	<24,000	<38,000	<52,000
	07/21/05	233,800	93.5	<1,800	4,800	<1,800	<2,500	15,000	<2,500	<2,800	<21,000	<3,100	<1,500	<3,200	<1,600	<2,200	<2,000	42,000	<2,300	<2,300	<3,400	<2,400	<2,800	<2,900	<2,300	<2,300	52,000	<2,700	<2,500	120,000	<1,800	<2,800	<3,900
VW-7	03/31/05	2,670,000		<18,000	<13,000	<18,000	<25,000	570,000	<25,000	<28,000	<210,000	<31,000	<15,000	<32,000	<16,000	<22,000	<20,000	<25,000	<23,000	<23,000	<34,000	<24,000	<28,000	<29,000	<23,000	<23,000	1,100,000	<27,000	<25,000	1,000,000	<18,000	<28,000	<39,000
	07/21/05	396,010	85.2	<240	750	280	3,400	24,000	760	<370	<2,800	580	<200	<430	<210	440	2,900	1,700	<310	<310	<450	<330	<370	1,200	<310	<310	160,000	<350	<340	200,000	<240	<380	<520
VW-8	03/31/05	21,710		<370	<260	<370	<490	<500	<490	<560	<4,200	<630	<300	1,000	<320	<430	<410	510	<460	<460	<680	<490	<550	<580	<460	<470	16,000	<530	<500	4,200	<360	<570	<780
	07/21/05	12,176	43.9	<92	76	<92	<120	1,100	<120	<140	<1,100	<160	<75	<160	<80	<110	<100	<130	<120	<120	<170	<120	<140	<140	<120	<120	4,400	<130	<130	6,600	<89	<140	<200
VW-9A	03/31/05	869,000		<9,200	40,000	<9,200	<12,000	120,000	<12,000	<14,000	<110,000	<16,000	<7,500	<16,000	<8,000	<11,000	<10,000	29,000	<12,000	<12,000	<17,000	<12,000	<14,000	<14,000	<12,000	<12,000	180,000	<13,000	<13,000	500,000	<8,900	<14,000	<20,000
	07/20/05	396,600	54.4	<1,800	19,000	<1,800	<2,500	27,000	5,500	<2,800	<21,000	<3,100	<1,500	<3,200	<1,600	<2,200	6,100	16,000	<2,300	<2,300	<3,400	<2,400	<2,800	<2,900	<2,300	<2,300	73,000	<2,700	<2,500	250,000	6,500	<2,800	<3,900
VW-9B	03/31/05	622,000		<5,200	24,000	<5,200	<7,100	73,000	13,000	<7,900	<60,000	<8,900	<4,300	<9,200	<4,500	<6,200	<5,900	12,000	<6,600	<6,600	<9,700	<7,000	<7,900	<8,200	<6,600	<6,700	110,000	<7,600	<7,200	390,000	<5,100	<8,100	<11,000
	07/20/05	24,290	96.1	<180	4,100	<180	<250	2,000	1,600	<280	<2,100	2,100	<150	<320	<160	<220	<200	370	<230	240	<340	<240	<280	<290	<230	<230	2,000	880	<250	11,000	530	<280	<390
VW-10A	03/31/05	1,247,000		<12,000	17,000	<12,000	<16,000	230,000	<16,000	<19,000	<140,000	<21,000	<10,000	<21,000	<11,000	<14,000	<14,000	<17,000	<15,000	<15,000	<23,000	<16,000	<18,000	<19,000	<15,000	<16,000	470,000	<18,000	<17,000	530,000	<12,000	<19,000	<26,000
	07/20/05	1,213	99.9	<0.92	5.9	<0.92	1.5	44	18	<1.4	49	1.9	<0.75	12	<0.8	<1.1	23	11	4.2	19	130	<1.2	<1.4	<1.4	6.9	<1.2	380	6.1	<1.3	500	<0.89	<1.4	<2
VW-10B	03/31/05	1,620,000		<12,000	20,000	<12,000	<16,000	260,000	<16,000	<19,000	<140,000	<21,000	<10,000	<21,000	<11,000	<14,000	<14,000	<17,000	<15,000	<15,000	<23,000	<16,000	<18,000	<19,000	<15,000	<16,000	680,000	<18,000	<17,000	660,000	<12,000	<19,000	<26,000
	07/20/05	23,130	98.6	<73	490	<73	<99	3,400	190	<110	<840	<130	<60	<130	<64	<87	<82	150	<92	<92	<140	<98	<110	<120	<92	<94	4,900	<110	<100	14,000	3,500	<110	<160
VW-11A	03/31/05	2,160,000		<18,000	110,000	<18,000	<25,000	450,000	<25,000	<28,000	<210,000	<31,000	<15,000	<32,000	<16,000	<22,000	<20,000	<25,000	<23,000	<23,000	<34,000	<24,000	<28,000	<29,000	<23,000	<23,000	730,000	<27,000	<25,000	870,000	<18,000	<28,000	<39,000
	07/20/05	188,000	91.3	<920	3,000	<920	<1,200	13,000	2,000	<1,400	<11,000	<1,600	<750	<1,600	<800	<1,100	22,000	<1,300	<1,200	<1,200	<1,700	<1,200	<1,400	<1,400	<1,200	<1,200	38,000	<1,300	<1,300	110,000	3,600	<1,400	<2,000
VW-11B	03/31/05	186,000		<1,800	12,000	<1,800	<2,500	38,000	<2,500	<2,800	<21,000	<3,100	<1,500	<3,200	<1,600	<2,200	<2,000	<2,500	<2,300	<2,300	<3,400	<2,400	<2,800	<2,900	<2,300	<2,300	39,000	<2,700	<2,500	97,000	<1,800	<2,800	<3,900
	07/20/05	33,700	81.9	<370	3,200	<370	<490	5,200	<490	<560	<4,200	<630	<300	<640	<320	<430	<410	<500	<460	<460	<680	<490	<550	<580	<460	<470	6,300	<530	<500	19,000	1,700	<570	<780
VW-12A	04/26/05	878,000		<5,200	120,000	<5,200	<7,100	53,000	19,000	<7,900	<60,000	<8,900	<4,300	<9,200	<4,500	<6,200	<5,900	76,000	<6,600	<6,600	<9,700	<7,000	<7,900	<8,200	<6,600	<6,700	60,000	<7,600	<7,200	550,000	<5,100	<8,100	<11,000
	07/21/05	818,000		<4,600	80,000	<4,600	<6,200	58,000	<6,200	<6,900	<53,000	<7,800	<3,700	<8,000	<4,000	<5,400	<5,100	40,000	<5,800	<5,800	<8,500	<6,100	<6,900	<7,200	<5,800	<5,900	210,000	<6,600	<6,300	430,000	<4,500	<7,100	<9,800
	11/03/05	920	99.9	<2.5	22	<2.5	5.2	24	6.9	8.7	<28	<4.2	<2	<4.3	<2.1	<2.9	<2.8	290	<3.1	<3.1	<4.6	<3.3	<3.7	<3.9	<3.1	<3.2	190	<3.6	3.5	370	<2.4	<3.8	<5.3
VW-12B	04/26/05	1,554,000		<9,200	140,000	<9,200	<12,000	110,000	86,000	<14,000	<110,000	<16,000	<7,500	<16,000	<8,000	<11,000	<10,000	250,000	<12,000	<12,000	<17,000	<12,000	<14,000	<14,000	<12,000	<12,000	68,000	<13,000	<13,000	900,000	<8,900	<14,000	<20,000
	07/21/05	170,600		<1,800	21,000	<1,800	<2,500	9,300	9,200	<2,800	<21,000	<3,100	<1,500	<3,200	<1,600	<2,200	<2,000	8,100	<2,300	<2,300	<3,400	<2,400	<2,800	<2,900	<2,300	<2,300	13,000	<2,700	<2,500	110,000	<1,800	<2,800	<3,900
	11/03/05	104,680	93.3	<250	9,900	<250	<340	4,500	6,000	<380	<2,900	2,000	<210	<440	<220	<300	410	5,100	<320	<320	<470	<340	<380	<400	<320	<320	8,800	970	<350	67,000	490	<390	<540
VW-13A	03/30/05	557,000		<4,600	73,000	<4,600	<6,200	<6,300	<6,200	<6,900	<53,000	<7,800	<3,700	<8,000	<4,000	<5,400	<5,100	<6,300	<5,800	<5,800	<8,500	<6,100	<6,900	<7,200	<5,800	<5,900	450,000	<6,600	<6,300	34,000	<4,500	<7,100	<9,800
	07/21/05	173,900	68.8	<2,400	19,000	<2,400	<3,300	<3,400	<3,300	<3,700	<28,000	<4,200	<2,000	<4,300	<2,100	<2,900	<2,700	<3,400	<3,100	<3,100	<4,500	<3,300	<3,700	<3,800	<3,100	<3,100	150,000	<3,500	<3,400	4,900	<2,400	<3,800	<5,200
VW-13B	03/30/05	277,000		<3,700	27,000	<3,700	<4,900	<5,000	<4,900	<5,600	<42,000	<6,300	<3,000	<6,400	<3,200	<4,300	<4,100	<5,000	<4,600	<4,600	<6,800	<4,900	<5,500	<5,800	<4,600	<4,700	230,000	<5,300	<5,000	20,000	<3,600	<5,700	<7,800
	07/21/05	7,388	97.3	<52	2,600	<52	<71	88	<71	<79	<600	<89	<43	<92	<45	<62	<59	<72	<66	<66	<97	<70	<79	<82	<66	<67	3,600	<76	<72	1,100	350	<81	<110
VW-14A	03/30/05	329,900		<1,800	<1,300	<1,800	<2,500	<2,500	<2,500	<2,800	<21,000	<3,100	<1,500	<3,200	<1,600	<2,200	<2,000	<2,500	<2,300	<2,300	<3,400	<2,400	<2,800	<2,900	<2,300	<2,300	320,000	<2,700	<2,500	9,900	92,000	<2,800	<3,900
	07/21/05	257,000	22.1	<4,600	47,000	<4,600	<6,200	<6,300	<6,200	<6,900	<53,000	<7,800	<3,700	<8,000	<4,000	<5,400	<5,100	<6,300	<5,800	<5,800	<8,500	<6,100	<6,900	<7,200	<5,800	<5,900	210,000	<6,600	<6,300	<4,700	<4,500	<7,100	<9,800
VW-14B	03/30/05	20,100		<240	1,600	<240	<330	<340	<330	<370	<2,800	<420	<200	<430	<210	<290	<270	<340	<310	<310	<450	<330	<370	<380	<310	<310	17,000	<350	<340	1,500	<240	<380	<520
	07/21/05	7,090	64.7	<52	190	<52	<71	<72	<71	<79	<600	<89	<43	<92	<45	<62	<59	<72	<66	<66	<97	<70	<79	<82	<66	<67	2,500	<76	<72	4,400	71	<81	<110
VW-15	03/30/05	302,000		<3,100	75,000	<3,100	<4,100	<4,200	<4,100	<4,600	<35,000	<5,200	<2,500	<5,400	<2,700	<3,600	<3,400	<4,200	<3,800	<3,800	<5,700	<4,100	<4,600	<4,800	<3,800	<3,900	200,000	<4,400	<4,200	27,000	<3,000	<4,700	<6,500
	07/21/05	114,000	62.3	<1,800	25,000	<1,800	<2,500	<2,500	<2,500	<2,800	<21,000	<3,100	<1,500	<3,200	<1,600	<2,200	<2,000	<2,500	<2,300	<2,300	<3,400	<2,400	<2,800	<2,900	<2,300	<2,300	77,000	<2,700	<2,500	12,000	<1,800	<2,800	<3,900
VW-16	03/31/05	299,000		<4,600	99,000	<4,600	<6,200	<6,300	<6,200	<6,900	<53,000	<7,800	<3,700	<8,000	<4,000	<5,400	<5,100	<6,300	<5,800	<5,800	<8,500	<6,100	<6,900	<7,200	<5,800	<5,900	180,000	<6,600	<6,300	20,000	<4,500	<7,100	<9,800
	07/21/05	13,020	95.6	<52	4,000	<52	<71	710	<71	<79	<600	<89	<43	<92	<45	<62	410	<72	<66	<66	<97	<70	<79	<82	<66	<67	3,600	<76	<72	4,300	88	<81	<110
VW-17A1	11/03/05	1,545		<3.1	<2.2	<3.1	<4.2	35	<4.2	<4.7	<35	<5.3	<2.5	<5.4	<2.7	<3.6	<3.4	<4.2	<3.9	<3.9	<5.7	<4.1	<4.7	<4.8	<3.9	<3.9	1,100	<4.5	<4.2	410	<3	<4.8	<6.6
VW-17A2	11/03/05	650		<1.2	<0.85	<1.2	<1.6	<1.6	<1.6	<1.8	<14	<2	<0.97	<2.1	<1	<1.4	<1.3	<1.6	<1.5	<1.5	<2.2	<1.6	<1.8	<1.9	<1.5	<1.5	490	<1.7	<1.6	160	<1.2	<1.8	<2.5
VW-17A3	11/03/05	40		<0.23	<0.16	<0.23	<0.31	1.1	<0.31	0.48	<2.7	0.74	<0.19	<0.4	<0.2	<0.27	1.4	<0.32	<0.29	0.63	0.45	<0.31	<0.35	<0.36	<0.29	<0.3	8.7	1.2	<0.32	25	0.25	<0.36	<0.49
VW-17B1	11/03/05	60		<0.26	0.38	<0.26	<0.36	4.6	<0.36	<0.4	<3	0.62	<0.22	0.55	<0.23	<0.31	<0.29	<0.36	<0.33	0.49	0.56	<0.35	<0.4	<0.41	<0.33	<0.34	19	1.2	<0.36	33	<0.26	<0.41	<0.56

RUBICON
Engineering Corporation

Table 7

History of VOC Concentrations in Soil Vapor
Former Univar USA Inc. Facility
5353 Jillson Street, Commerce, California
(all units are in parts per billion - ppbv)

Station Name	Date Collected	Summation of total VOCs	Percent Change from Initial Monitoring	1,1,1-Trichloroethane	1,1,2-Trichloro-1,2,2-trifluoroethane	1,1,2-Trichloroethane	1,1-Dichloroethane	1,1-Dichloroethene	1,2-Dichloroethane	1,4-Dioxane	Acetone	Benzene	Bromodichloromethane	Carbon Disulfide	Carbon Tetrachloride	Chlorobenzene	Chloroform	cis-1,2-Dichloroethene	Ethylbenzene	m,p-Xylenes	Methyl Ethyl Ketone	Methyl Isobutyl Ketone	Methyl tert-Butyl Ether	Methylene Chloride	o-Xylene	Styrene	Tetrachloroethene	Toluene	trans-1,2-Dichloroethene	Trichloroethene	Trichlorofluoromethane	Vinyl Acetate	Vinyl Chloride
VW-17B2	11/03/05	14		<0.23	<0.17	<0.23	<0.32	<0.32	<0.32	<0.36	5.5	<0.4	<0.19	5.1	<0.2	<0.28	<0.26	<0.32	<0.29	0.33	1.2	<0.31	<0.36	<0.37	<0.29	<0.3	0.45	0.98	<0.32	0.62	<0.23	<0.36	<0.5
VW-18A1	03/31/05	145,400		<1,200	6,400	<1,200	<1,600	30,000	<1,600	<1,900	<14,000	<2,100	<1,000	<2,100	<1,100	<1,400	<1,400	<1,700	<1,500	<1,500	<2,300	<1,600	<1,800	<1,900	<1,500	<1,600	76,000	<1,800	<1,700	33,000	<1,200	<1,900	<2,600
VW-18A2	03/31/05	1,237,000		<7,300	55,000	<7,300	<9,900	280,000	<9,900	<11,000	<84,000	<13,000	<6,000	<13,000	<6,400	<8,700	12,000	<10,000	<9,200	<9,200	<14,000	<9,800	<11,000	<12,000	<9,200	<9,400	380,000	<11,000	<10,000	510,000	<7,100	<11,000	<16,000
VW-18A3	03/31/05	1,630,000		<18,000	110,000	<18,000	<25,000	420,000	<25,000	<28,000	<210,000	<31,000	<15,000	<32,000	<16,000	<22,000	<20,000	<25,000	<23,000	<23,000	<34,000	<24,000	<28,000	<29,000	<23,000	<23,000	310,000	<27,000	<25,000	790,000	<18,000	<28,000	<39,000
VW-18B1	03/31/05	168,000		<730	14,000	<730	<990	27,000	<990	<1,100	<8,400	<1,300	<600	<1,300	<640	<870	<820	<1,000	<920	<920	<1,400	<980	<1,100	<1,200	<920	<940	54,000	<1,100	<1,000	73,000	<710	<1,100	<1,600
VW-18B2	03/31/05	160,000		<920	13,000	<920	<1,200	25,000	<1,200	<1,400	<11,000	<1,600	<750	<1,600	<800	<1,100	<1,000	<1,300	<1,200	<1,200	<1,700	<1,200	<1,400	<1,400	<1,200	<1,200	56,000	<1,300	<1,300	66,000	<890	<1,400	<2,000
VW-19A1	03/31/05	21,260		<150	<100	<150	260	3,000	<200	<220	<1,700	<250	<120	<260	<130	<170	<160	<200	<180	<180	<270	<200	<220	<230	<180	<190	11,000	<210	<200	7,000	<140	<230	<310
	07/20/05	239		<0.92	<0.65	<0.92	<1.2	1.4	<1.2	<1.4	14	<1.6	<0.75	9.0	<0.8	<1.1	4.6	<1.3	<1.2	<1.2	<1.7	<1.2	<1.4	<1.4	<1.2	<1.2	150	<1.3	<1.3	60	<0.89	<1.4	<2
	11/03/05	62	99.7	<0.23	<0.16	<0.23	<0.31	<0.32	<0.31	<0.35	5.6	<0.39	0.94	<0.4	<0.2	<0.27	4.7	<0.32	<0.29	<0.29	0.96	<0.31	<0.35	0.77	<0.29	<0.29	38	<0.33	<0.32	11	0.27	4.2	<0.49
VW-19A2	03/31/05	313,400		<2,400	<1,700	<2,400	6,400	67,000	<3,300	<3,700	<28,000	<4,200	<2,000	<4,300	<2,100	<2,900	<2,700	<3,400	<3,100	<3,100	<4,500	<3,300	<3,700	<3,800	<3,100	<3,100	110,000	<3,500	<3,400	130,000	<2,400	<3,800	<5,200
	07/20/05	22,440		<92	<65	<92	920	3,500	<120	<140	<1,100	<160	<75	<160	<80	<110	120	<130	<120	<120	<170	<120	<140	<140	<120	<120	8,600	<130	<130	9,300	340	<140	<200
	11/03/05	7,664	97.6	<9.2	<6.6	<9.2	110	520	<12	<14	<110	<16	<7.5	<16	<8	<11	19	15	<12	<12	<17	<12	<14	<15	<12	<12	4,000	<13	<13	3,000	<9	<14	<20
VW-20A1	03/31/05	45,990		<180	<130	<180	<250	9,700	<250	<280	<2,100	<310	<150	<320	<160	<220	<200	<250	<230	<230	<340	<240	<280	<290	<230	<230	23,000	290	<250	13,000	<180	<280	<390
	07/20/05	22,800		<180	<130	<180	<250	<250	<250	<280	<2,100	<310	<150	<320	<160	<220	<200	<250	<230	<230	<340	<240	<280	<290	<230	<230	19,000	<270	<250	3,800	670	<280	<390
	11/04/05	1,481	96.8	<2.3	<1.6	<2.3	<3.1	<3.1	<3.1	<3.4	<26	<3.9	<1.9	11	<2	<2.7	<2.5	<3.1	<2.9	<2.9	<4.2	<3	<3.4	<3.6	<2.9	<2.9	1,300	<3.3	<3.1	170	<2.2	<3.5	<4.9
VW-20A2	03/31/05	270,000		<3,700	<2,600	<3,700	<4,900	40,000	<4,900	<5,600	<42,000	<6,300	<3,000	<6,400	<3,200	<4,300	<4,100	<5,000	<4,600	<4,600	<6,800	<4,900	<5,500	<5,800	<4,600	<4,700	130,000	<5,300	<5,000	100,000	<3,600	<5,700	<7,800
	07/20/05	38,740		<240	<170	<240	640	5,100	<330	<370	<2,800	<420	<200	<430	<210	<290	<270	<340	<310	<310	<450	<330	<370	<380	<310	<310	14,000	<350	<340	19,000	890	<380	<520
	11/04/05	8,581	96.8	<23	<17	<23	81	1,000	<31	<35	<270	<40	<19	<41	<20	<28	<26	<32	<29	<29	<43	<31	<35	<37	<29	<30	3,200	<34	<32	4,300	<23	<36	<50
VW-21A1	04/26/05	800		<9.2	<6.5	<9.2	<12	250	<12	<14	<110	<16	<7.5	<16	<8	<11	<10	<13	<12	<12	<17	<12	<14	<14	<12	<12	380	<13	<13	170	<8.9	<14	<20
	07/21/05	329		<0.92	<0.65	<0.92	<1.2	29	<1.2	<1.4	22	<1.6	<0.75	22	<0.8	<1.1	1.6	<1.3	<1.2	5.0	3.6	<1.2	<1.4	<1.4	1.7	<1.2	150	3.5	<1.3	91	<0.89	<1.4	<2
	11/03/05	40	94.9	<0.45	<0.32	<0.45	<0.61	<0.63	<0.61	<0.69	<5.2	<0.78	<0.37	<0.8	<0.39	<0.54	0.99	<0.63	<0.57	<0.57	<0.84	<0.61	<0.69	<0.71	<0.57	<0.58	36	<0.66	<0.63	3.5	<0.44	<0.7	<0.97
VW-21A2	04/26/05	64,000		<370	<260	<370	<490	18,000	<490	<560	<4,200	<630	<300	<640	<320	<430	<410	<500	<460	<460	<680	<490	<550	<580	<460	<470	25,000	<530	<500	21,000	<360	<570	<780
	07/21/05	6,200		<46	<33	<46	<62	1,800	<62	<69	<530	<78	<37	<80	<40	<54	<51	<63	<58	<58	<85	<61	<69	<72	<58	<59	2,500	<66	<63	1,900	<45	<71	<98
	11/03/05	5,223	91.8	<2.3	1.8	<2.3	5.4	2,000	<3.1	<3.4	<26	<3.9	<1.9	5.7	<2	<2.7	6.2	<3.1	<2.9	<2.9	<4.2	<3	3.7	<3.6	<2.9	<2.9	1,800	<3.3	<3.1	1,400	<2.2	<3.5	<4.9
VW-22A1	04/26/05	2,570		<37	<26	<37	<49	560	<49	<56	<420	<63	<30	<64	<32	<43	<41	<50	<46	<46	<68	<49	<55	<58	<46	<47	1,500	<53	<50	510	<36	<57	<78
	07/20/05	3,440		<37	<26	<37	<49	<50	<49	<56	<420	<63	<30	<64	<32	<43	<41	<50	<46	<46	<68	<49	<55	<58	<46	<47	2,800	<53	<50	640	120	<57	<78
	11/03/05	322	87.5	<1.2	<0.82	<1.2	<1.6	1.9	<1.6	<1.7	<13	<2	<0.94	<2	<1	<1.4	4.3	<1.6	<1.5	<1.5	<2.1	<1.5	<1.7	<1.8	<1.5	<1.5	260	<1.7	<1.6	56	<1.1	<1.8	<2.5
VW-22A2	04/26/05	86,380		<140	<100	<140	380	26,000	<190	<210	<1,600	<240	<110	<250	<120	<170	<160	<190	<180	<180	<260	<190	<210	<220	<180	<180	32,000	<200	<190	28,000	<140	<220	<300
	07/20/05	200		<0.92	<0.65	<0.92	<1.2	7.9	<1.2	<1.4	22	<1.6	<0.75	5.5	<0.8	<1.1	<1	<1.3	<1.2	1.5	1.7	<1.2	<1.4	<1.4	<1.2	<1.2	110	2.7	<1.3	49	<0.89	<1.4	<2
	11/03/05	1,888	97.8	<2.3	<1.7	<2.3	18	280	<3.2	<3.6	<27	<4	<1.9	<4.1	<2	<2.8	9.7	<3.2	<2.9	<2.9	<4.3	<3.1	<3.6	<3.7	<2.9	<3	620	<3.4	<3.2	960	<2.3	<3.6	<5
VW-23A1	04/26/05	930		<18	<13	<18	<25	220	<25	<28	<210	<31	<15	<32	<16	<22	<20	<25	<23	<23	<34	<24	<28	<29	<23	<23	560	<27	<25	150	<18	<28	<39
	07/20/05	222		<0.92	<0.65	<0.92	<1.2	13	<1.2	<1.4	17	<1.6	<0.75	12	<0.8	<1.1	1.7	<1.3	<1.2	<1.2	<1.7	<1.2	<1.4	<1.4	<1.2	<1.2	130	1.4	<1.3	47	<0.89	<1.4	<2
	11/03/05	123	86.8	<0.57	<0.41	<0.57	<0.77	1.6	<0.77	<0.87	15	<0.98	<0.47	7.5	<0.5	<0.68	31	<0.79	<0.72	<0.72	<1.1	<0.76	<0.87	<0.9	<0.72	<0.73	60	<0.83	<0.79	7.4	<0.56	2.6	<1.2
VW-23A2	04/26/05	46,000		<370	<260	<370	<490	20,000	<490	<560	<4,200	<630	<300	<640	<320	<430	<410	<500	<460	<460	<680	<490	<550	<580	<460	<470	15,000	<530	<500	11,000	<360	<570	<780
	07/20/05	7,800		<37	<26	<37	<49	3,100	<49	<56	<420	<63	<30	<64	<32	<43	<41	<50	<46	<46	<68	<49	<55	<58	<46	<47	2,900	<53	<50	1,800	<36	<57	<78
	11/03/05	2,809	93.9	<2.3	1.7	<2.3	8.6	810	<3.1	<3.4	<26	<3.9	<1.9	8.1	<2	<2.7	11	<3.1	<2.9	<2.9	<4.2	<3	<3.4	<3.6	<2.9	<2.9	1,200	<3.3	<3.1	770	<2.2	<3.5	<4.9
VW-24A1	04/26/05	6,174		<61	<44	<61	<82	190	<82	<93	<700	<100	<50	<110	<53	<72	<68	84	<77	<77	<110	<81	<92	<96	<77	<78	3,600	<88	<84	2,300	<59	<95	<130
	07/20/05	5,900		<61	<44	<61	<82	<84	<82	<93	<700	<100	<50	<110	<53	<72	<68	<84	<77	<77	<110	<81	<92	<96	<77	<78	4,100	<88	<84	1,800	<59	<95	<130
	11/03/05	319	94.8	<2.3	<1.6	<2.3	<3.1	<3.1	<3.1	<3.4	<26	<3.9	<1.9	<4	<2	<2.7	<2.5	<3.1	<2.9	<2.9	<4.2	<3	<3.4	<3.6	<2.9	<2.9	240	<3.3	<3.1	79	<2.2	<3.5	<4.9
VW-24A2	04/26/05	268,600		<2,300	<1,600	<2,300	3,600	43,000	<3,100	<3,500	<26,000	<3,900	<1,900	<4,000	<2,000	<2,700	<2,600	13,000	<2,900	<2,900	<4,200	<3,100	<3,500	<3,600	<2,900	<2,900	79,000	<3,300	<3,200	130,000	<2,200	<3,600	<4,900
	07/20/05	32,560		<240	<170	<240	860	3,100	<330	<370	<2,800	<420	<200	<430	<210	<290	<270	2,400	<310	<310	<450	<330	<370	<380	<310	<310	9,200	<350	<340	17,000	<240	<380	<520
	11/03/05	12,640	95.3	<46	<33	<46	180	710	<62	<70	<530	<79	<38	<81	<40	<55	<52	850	<58	<58	<85	<62	<70	<73	<58	<59	4,300	<67	<64	6,600	<45	<72	<99
VW-25A1	04/26/05	489		<3.7	<2.6	<3.7	<4.9	11	<4.9	<5.6	<42	<6.3	<3	8.4	<3.2	<4.3	<4.1	<5	<4.6	<4.6	<6.8	<4.9	<5.5	<5.8	<4.6	<4.7	210	<5.3	<5	260	<3.6	<5.7	<7.8
	07/20/05	228		<0.92	<0.65	<0.92	<1.2	2.1	<1.2	<1.4	17	<1.6	<0.75	11	<0.8	<1.1	<1	1.4	7.0	32	<1.7	<1.2	<1.4	<1.4	11	<1.2	87	6.7	<1.3	53	<0.89	<1.4	<2
	11/03/05	53	89.2	<0.45	<0.32	<0.45	<0.61	<0.63	<0.61	<0.69	7.6	<0.78	<0.37	7.2	<0.39	<0.54	<0.51	<0.63	<0.57	<0.57	<0.84	<0.61	<0.69	<0.71	<0.57	<0.58	25	<0.66	<0.63	13	<0.44	1.9	<0.97
VW-25A2	04/26/05	52,000		<460	<330	<460	<620	10,000	<620	<690	<5,300	<780	<370	<800	<400	<540	<510	<630	<580	<580	<850	<610	<690	<720	<580	<590	13,000	<660	<630	29,000	<450	<710	<980
	07/20/05	6,660		<52	<37	<52	<71	660	<71	<79	<600	<89	<43	<92	<45	<62	<59	<72	<66	<66	<97	<70	<79	<82	<66	<67	1,600	<76	<72	4,400	<51	<81	<110
	11/03/05	414	99.2	<0.46	<0.33	0.57	<0.62	15	<0.62	<0.7	14	1.2	<0.38	6.7	<0.4	<0.55	6.2	0.82	<0.58	<0.58	<0.85	<0.62	<0.7	<0.73	<0.58	<0.59	150	<0.67	<0.64	220	<0.45	<0.72	<0.99
VW-26A1	04/26/05	2,200		<37	<26	<37	<49	<50	<49	<56	<420	<63	<30	<64	<32	<43	<41	<50	<46	<46	<68	<49	<55	<58	<46	<47	1,600	<53	<50	600	<36	<57	<78
	07/20/05	264		<0.92	<0.65	<0.92	<1.2	1.6	<1.2	<1.4	17	<1.6	<0.75	11	<0.8	<1.1	<1	<1.3	17	79	<1.7	<1.2	<1.4	<1.4	27	<1.2	65	16	<1.3	30	<0.89	<1.4	<2
	11/03/05	50	97.7	<0.45	<0.32	<0.45	<0.6	<0.62	<0.6	<0.68	<5.1	<0.76	<0.36	7.6	<0.39	<0.53	<0.5	<0.62	<0.56	0.76	<0.83	<0.6	<0.68	<0.7	<0.56	<0.57	31	<0.65	<0.62	11	0.5	<0.69	<0.95
VW-26A2	04/26/05	181,800		<1,800	<1,300	<1,800	<2,500	20,000	<2,500	<2,800	<21,000	<3,100	<1,500	<3,200	<1,600	<2,200	<2,000	6,800	<2,300	<2,300	<3,400	<2,400	<2,800	<2,900	<2,300	<2,300	86,000	<2,700	<2,500	69,000	<1,800	<2,800	<3,900
	07/20/05	17,460		<92	<65	<92	170	890	<120	<140	<1,100	<160	<75	<160	<80	<110	<100	1,200	<120	<120	<170	<120	<140	<140	<120	<120	7,200	<130	<130	8,000	<89	<140	<200
	11/03/05	3,342	98.2	<2.3	<1.6	3.2	17	83	8.1	<3.5	<27	4.3	<1.9	<4	<2	3.0	3.4	120	<2.9	<2.9	<4.3	<3.1	<3.5	<3.6	<2.9	<3	1,600	<3.3	<3.2	1,500	<2.2	<3.6	<4.9
VW-27A1	04/26/05	7,420		<73	<52	<73	<99	130	<99	<110	<840	<130	<60	<130	<64	<87	290	<100	<92	<92	<140	<98	<110	<120	<92	<94	1,500	<110	<100	5,500	<71	<110	<160
VW-27A2	04/26/05	641,300		<7,300	71,000	<7,300	<9,900	52,000	<9,900	<11,000	<84,000	<13,000	<6,000	<13,000	<6,400	<8,700	8,300	<10,000	<9,200	<9,200	<14,000	<9,800	<11,000	<12,000	<9,200	<9,400	100,000	<11,000	<10,000	410,000	<7,100	<11,000	<16,000
VW-27B	04/26/05	39,280		<370	4,300	<370	<490	3,100	<490	<560	<4,200	<630	<300	<640	<320	<430	480	<500	<460	<460	<680	<490	<550	<580	<460	<470	6,400	<530	<500	25,000	<360	<570	<780
VW-28A1	04/26/05	2,052		<12	260	<12	<16	19	<16	<19	<140	<21	<10	<21	<11	<14	140	<17	<15	<15	<23	<16	<18	<19	<15	<16	600	93	<17	940	<12	<19	<26
VW-28A2	04/26/05	139,600		<1,200	35,000	<1,200	<1,600	9,600	<1,600	<1,900	<14,000	<2,100	<1,000	<2,100	<1,100	<1,400	<1,400	<1,700	<1,500	<1,500	<2,300	<1,600	<1,800	<1,900	<1,500	<1,600	61,000	<1,800	<1,700	34,000	<1,200	<1,900	<2,600
VW-28B	04/26/05	2,243		<15	480	<15	<20	100	<20	<22	<170	<25	<12	<26	<13	<17	53	<20	<18	<18	<27	<20	<22	<23	<18	<19	840	190	<20	580	44	<23	<31

P:\1001 Univar\02 Jillson\Progress Reports\2005 4Q Progress Report\[4q05 Tables.xls]Table 7 - Soil Vapor

RUBICON
Engineering Corporation

Table 8

Field Operation and Monitoring Data

Former Univar USA Inc. Facility

5353 Jillson Street, Commerce, California

Date	Vapor Flow Rate (scfm[1])	Total Organic Compounds VCV-INF (ppmv[2])	VCV1-OUT (ppmv)	VCV2-OUT (ppmv)	VCV3-OUT (ppmv)	VCV4-OUT (ppmv)	Comments
04/04/05	830	535	0.0	0.0	0.0	0.0	System startup
04/05/05	815	405	0.0	0.0	0.0	0.0	Collect samples for lab analysis
04/06/05	810	226	0.0	0.0	0.0	0.0	
04/07/05	945	280	0.0	0.0	0.0	0.0	
04/08/05	890	281	13	0.0	0.0	0.0	
04/11/05	900	171	34	0.0	0.0	0.0	
04/13/05	820	265	84	0.0	0.0	0.0	
04/14/05							Collect samples for lab analysis
04/18/05	945	307	116	0.0	0.0	0.0	
04/22/05	810	143	99	57	0.0	0.0	
04/29/05	820	160	89	36	36	0.0	Shut down system pending carbon changeout
05/06/05							Carbon changeout for 2 vessels, restart system
05/09/05							Collect samples for lab analysis
05/12/05	525	88	37	9.9	0.0	0.0	
05/19/05	530	69	31	38	5.4	0.0	
05/24/05							Carbon changeout for 1 vessel
05/27/05	720	62	17	18	0.0	0.0	
06/02/05	850	69	23	23	10	0.0	
06/07/05	700	73	58	59	42	0.0	Shut down system pending carbon changeout
06/10/05							Carbon changeout for 1 vessel, restart system
06/15/05	690	80	39	39	0.0	0.0	Collect samples for lab analysis.
06/21/05	880	30	37	33	36	2.4	Shut down system pending carbon changeout
06/24/05							Carbon changeout for 2 vessels, restart system
06/29/05	565	77	42	53	0.0	0.0	
07/07/05	510	26	5	47	0.0	0.0	Collect samples for lab analysis.
07/14/05	530	13	16	24	0.4	0.0	Carbon changeout for 1 vessel
07/21/05	525	174	55	56	84	7.2	Shut down system pending carbon changeout
07/28/05							Carbon changeout for 2 vessels, restart system.
07/29/05	340	- -	26	5.6	0.0	0.0	
08/04/05	280	375	267	14	0.0	0.0	Collect samples for lab analysis
08/12/05	340	782	220	596	3.7	0.5	
08/17/05	390	196	205	276	18	0.5	Shut down system pending carbon changeout
08/19/05							Carbon changeout for 2 vessels
08/24/05	250	845	87	2.8	2.2	1.3	
09/02/05	250	830	240	7.8	1.1	1.4	
09/07/05	255	682	185	21	1.1	2.1	
09/14/05	269	373	103	42	0.7	0.1	
09/23/05	430	488	136	182	14.1	1.5	
09/28/05							Carbon changeout for 2 vessels
09/29/05	550	275	18	1.7	0.0	0.0	Collect samples for lab analysis
10/05/05	455	523	125	6.	0.5	0.5	
10/13/05	410	331	143	17.1	0.3	0.0	
10/19/05	425	555	168	90.1	14.2	1.0	
10/27/05	300	545	159	202.	23.3	4.2	
10/31/05							Carbon changeout for 2 vessels. Collect
11/04/05	365	405	115	19.6	0.1	0.0	samples for lab analysis
11/10/05	425	500	157	66.8	0.8	0.0	

Table 8

Field Operation and Monitoring Data

Former Univar USA Inc. Facility

5353 Jillson Street, Commerce, California

Date	Vapor Flow Rate (scfm[1])	Total Organic Compounds VCV-INF (ppmv[2])	VCV1-OUT (ppmv)	VCV2-OUT (ppmv)	VCV3-OUT (ppmv)	VCV4-OUT (ppmv)	Comments
11/17/05	400	335	129	64.	1.9	0.0	Collect samples for lab analysis
11/23/05	400	475	120	36.5	3.9	0.5	
12/02/05	265	385	182	52.3	53.4	10.0	Shut down system pending carbon changeout
12/12/05	440	70	43	23.6	0.0	0.0	Carbon changeout for 2 vessels, restart system.
12/16/05	425	54	26	23.1	0.0	0.0	
12/29/05	430	75	31	30.5	17.0	0.0	

Notes: (1) scfm denotes standard cubic feet per minute.

(2) ppmv denotes parts per million by volume as hexane, as measured using a photoionization detector.

Table 9
Summary of Organic Compounds in SVET Influent and Effluent
Former Univar USA Inc. Facility
5353 Jillson Street, Commerce, California
(All units are parts per billion by volume, ppbv)

Station Name	Date Collected	Units	1,1,1-Trichloroethane	1,1,2-Trichloro-1,2,2-trifluoroethane	1,1-Dichloroethane	1,1-Dichloroethene	1,2-Dichloroethane	1,4-Dioxane	Acetone	Benzene	Carbon Disulfide	Chloroform	cis-1,2-Dichloroethene	m,p-Xylenes	Methyl Ethyl Ketone	Methylene Chloride	o-Xylene	Tetrachloroethene	Toluene	Trichloroethene	Trichlorofluoromethane	Vinyl Chloride
VCV-INF	04/05/05	ppbv	**4,900**	**19,000**	**2,800**	**65,000**	<1,200	<1,400	<11,000	<1,600	<1,600	<1,000	**12,000**	<1,200	<1,700	**2,800**	<1,200	**240,000**	**33,000**	**140,000**	<890	<2,000
	04/14/05	ppbv	**1,200**	**7,700**	**920**	**14,000**	**580**	<560	<4,200	<630	<640	<410	**5,000**	<460	<680	**760**	<460	**75,000**	**9,600**	**56,000**	<360	<780
	05/09/05	ppbv	<1,200	**6,300**	<1,600	**7,300**	<1,600	<1,900	<14,000	<2,100	<2,100	<1,400	**3,500**	<1,500	<2,300	<1,900	<1,500	**67,000**	**9,600**	**46,000**	<1,200	<2,600
	06/15/05	ppbv	**530**	**3,200**	**300**	**3,500**	**640**	<190	<1,400	<210	<210	**390**	**2,300**	<150	<230	**210**	<150	**22,000**	**3,800**	**23,000**	**160**	<260
	07/07/05	ppbv	**25**	**91**	<12	**87**	**22**	<14	<110	<16	<16	**12**	**67**	<12	<17	**17**	<12	**730**	**190**	**890**	<8.9	<20
	08/04/05	ppbv	**1,000**	**1,800**	<490	**3,300**	**530**	<560	<4,200	<630	<640	**450**	**1,700**	<460	<680	<580	<460	**24,000**	**7,000**	**26,000**	<360	<780
	09/29/05	ppbv	**470**	**630**	**110**	**1,600**	**310**	<56	<420	**100**	<65	**240**	**1,100**	**110**	<68	**72**	<46	**15,000**	**3,500**	**16,000**	<36	<79
	10/31/05	ppbv	**720**	**1,200**	<470	**3,300**	**530**	<530	<4,000	<600	<610	**560**	**1,600**	<440	<650	<550	<440	**19,000**	**5,700**	**23,000**	<340	<750
	11/17/05	ppbv	**470**	**1,200**	**150**	**2,800**	**440**	**98**	<580	**730**	<88	**390**	**1,300**	**150**	<93	<79	<63	**13,000**	**4,400**	**16,000**	**350**	<110
	12/20/05	ppbv	**360**	**750**	<250	**2,500**	<250	<280	<2,200	**400**	<330	**250**	**820**	<240	<350	<290	<240	**13,000**	**3,100**	**14,000**	**420**	<400
VCV4-OUT	04/05/05	ppbv	<0.92	<0.65	<1.2	<1.3	<1.2	<1.4	**13**	<1.6	**3.5**	<1	<1.3	**1.5**	<1.7	<1.4	<1.2	<0.74	**2.6**	<0.93	<0.89	<2
	04/14/05	ppbv	<0.92	<0.65	<1.2	<1.3	<1.2	<1.4	**12**	<1.6	**3.0**	<1	<1.3	**2.8**	**3.5**	<1.4	<1.2	<0.74	**3.7**	<0.93	<0.89	<2
	05/09/05	ppbv	<0.92	<0.65	<1.2	<1.3	<1.2	<1.4	<11	<1.6	**2.9**	<1	**2.5**	**3.0**	**3.3**	<1.4	**1.3**	**1.8**	**2.3**	**1.3**	<0.89	<2
	06/15/05	ppbv	<0.92	<0.65	<1.2	<1.3	<1.2	<1.4	**48**	<1.6	**6.2**	<1	**1.6**	**2.8**	<1.7	<1.4	<1.2	**0.9**	**4.4**	**2.8**	<0.89	**7.4**
	07/07/05	ppbv	<0.92	**1.7**	<1.2	**15**	<1.2	<1.4	<11	<1.6	**3.4**	<1	**1.6**	**3.7**	<1.7	**17**	**1.2**	**19**	**7.3**	**7.4**	<0.89	**2.7**
	08/04/05	ppbv	<0.92	**21**	**1.4**	**7.8**	<1.2	<1.4	**120**	<1.6	**5.5**	<1	<1.3	**2.4**	<1.7	<1.4	<1.2	<0.74	**2.6**	<0.93	<0.89	<2
	09/29/05	ppbv	<0.26	**15**	**2.0**	**210**	<0.35	<0.4	<3	**1.0**	<0.46	<0.29	<0.36	**0.86**	<0.49	**1.5**	<0.33	<0.21	**1.8**	<0.27	**1.9**	<0.56
	10/31/05	ppbv	<0.26	**22**	**3.3**	**410**	<0.35	<0.4	<3	<0.45	<0.46	**0.4**	**0.46**	**1.0**	<0.49	**1.5**	<0.33	**6.5**	**2.3**	**5.5**	**3.3**	<0.56
	11/17/05	ppbv	<0.25	**1.1**	<0.34	**4.3**	<0.34	<0.38	<2.9	<0.43	<0.44	<0.28	<0.35	**0.45**	<0.47	<0.4	<0.32	**1.4**	**0.72**	**0.42**	<0.25	<0.54
	12/20/05	ppbv	<0.25	**0.85**	<0.33	**13**	<0.33	<0.37	**4.6**	<0.42	<0.43	<0.28	<0.34	<0.31	<0.46	<0.39	<0.31	**2.3**	**0.63**	**0.85**	<0.24	<0.53

P:\1001 Univar\02 Jillson\Progress Reports\2005 4Q Progress Report\[4q05 Tables.xls]Table 9 - inf & eff

RUBICON
Engineering Corporation

Figures

P:\1001\02\SITE LOCATION MAPA1

0 2000 4000 FEET

APPROXIMATE SCALE

REFERENCE:
7.5 MINUTE U.S.G.S. TOPOGRAPHIC MAPS OF
LOS ANGELES AND SOUTH GATE, CALIFORNIA
DATED: 1966 AND 1965 RESPECTIVELY
PHOTOREVISED: 1981

FIGURE 1

SITE LOCATION MAP

FORMER UNIVAR USA INC. FACILITY
5353 JILLSON STREET
COMMERCE, CALIFORNIA

RUBICON
Engineering Corporation

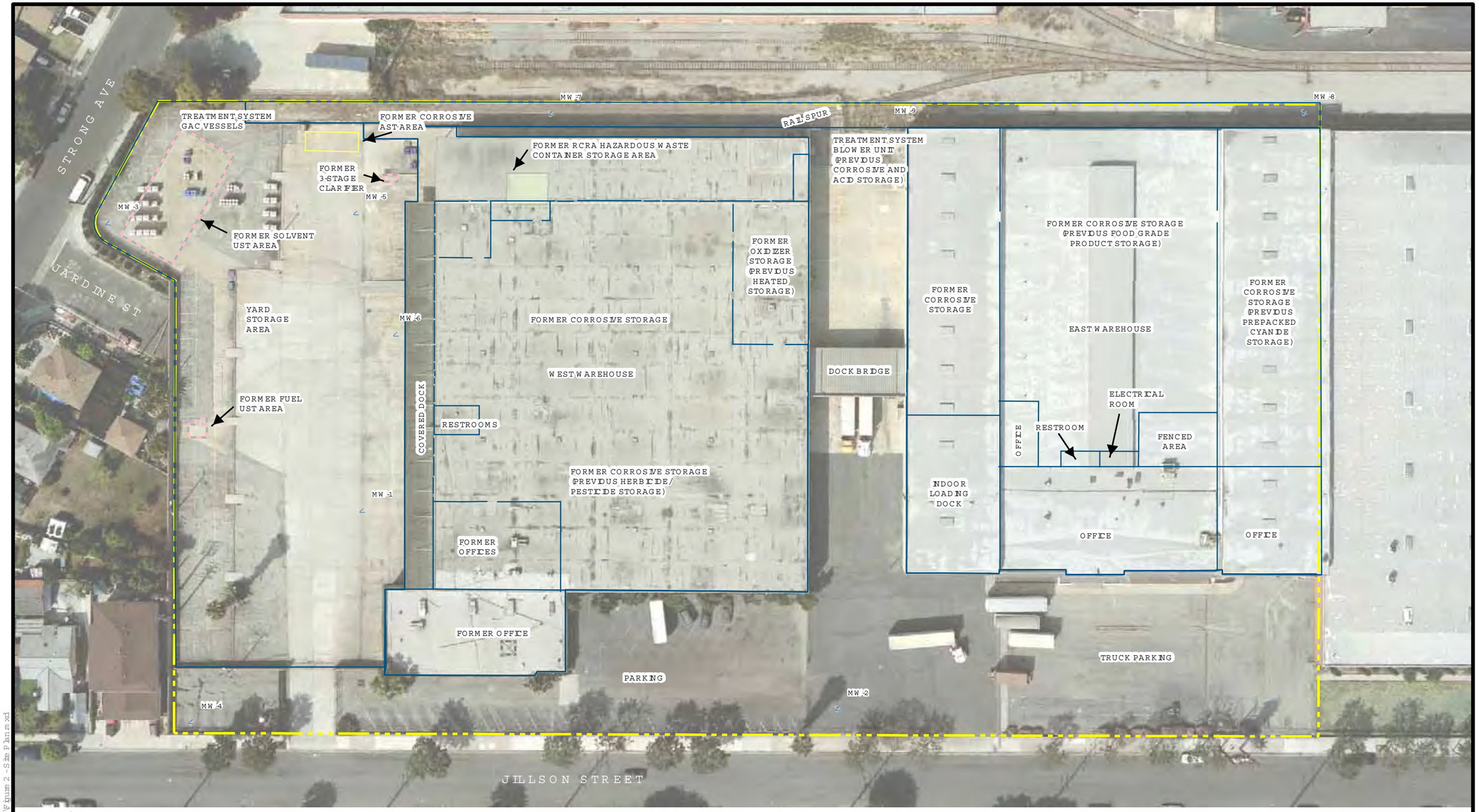

1:720

60 0 60 Feet

LEGEND

- Property Line
- Building Interior Walls
- Former USTs
- Ground Water Monitoring Well

REFERENCE:
AERIAL PHOTO BY IK. CURTIS SERVICES INC., BURBANK, CALIFORNIA FLOWN APRIL 9, 2002

FIGURE 2

SITE PLAN

FORMER UNIVAR USA INC. FACILITY
5353 JILLSON STREET
COMMERCE, CALIFORNIA

RUBICON Engineering Corporation

\\Server01\Projects\001 Univar\02 Jillson\Figure 2 - Site Plan.mxd

0 30 60 120 180 240 Feet

APPROXIMATE SCALE

REFERENCE:
AERIAL PHOTO BY I.K. CURTIS SERVICES, INC., BURBANK, CALIFORNIA FLOWN APRIL 9, 2002

Legend

Monitoring Wells

Property Line

FIGURE 3

GROUND WATER WELL LOCATION MAP

FORMER UNIVAR USA INC. FACILITY
5353 JILLSON STREET
COMMERCE, CALIFORNIA

RUBICON Engineering Corporation

\\Server01\Projects\1001 Univar\02-3Phase\2004 Progress Report\WellLocation Map.mxd

120 0 120 FEET

APPROXIMATE SCALE

REFERENCE:
AERIAL PHOTO BY I.K. CURTIS SERVICES, INC., BURBANK CALIFORNIA FLOWN APRIL 9, 2002

LEGEND

(55.60) MONITORING WELL LOCATION SHOWING GROUND WATER ELEVATION

LINE OF EQUAL WATER LEVEL EVELATION, ft MSL

PROPERTY LINE

FIGURE 4

GROUND WATER ELEVATIONS
NOVEMBER 2005

FORMER UNIVAR USA INC. FACILITY
5353 JILLSON STREET
COMMERCE, CALIFORNIA

RUBICON
Engineering Corporation

\\SERVER01\PROJECTS\1001 Univar\02 Jillson\3Q05 Progress Report\Figure 4-GW Elevations.mxd

0 60 120 240 Feet

APPROXIMATE SCALE

REFERENCE:
AERIAL PHOTO BY IK.CURTIS SERVICES, INC., BURBANK, CALIFORNIA FLOWN APRIL 9, 2002

Legend

- (230) Monitoring well location showing TCE concentration in ground water
- Line of approximate equal TCE concentration in ug/L
- Property Line

FIGURE 5

DISTRIBUTION OF TCE IN GROUND WATER NOVEMBER 2005

FORMER UNIVAR USA INC. FACILITY
5353 JILLSON STREET
COMMERCE, CALIFORNIA

RUBICON
Engineering Corporation

\\Server01\Projects\1001 Univar\02 JBon\Progress Reports\2005-3Q Progress Report\Fig 5 - TCE in GW 0805.mxd

0 60 120 240 Feet

APPROXIMATE SCALE

REFERENCE:
AERIAL PHOTO BY I.K. CURTIS SERVICES, INC., BURBANK, CALIFORNIA FLOWN APRIL 9, 2002

Legend

- (230) Monitoring well location showing PCE concentration in ground water
- Line of approximate equal PCE concentration in ug/L
- Property Line

FIGURE 6

DISTRIBUTION OF PCE IN GROUND WATER NOVEMBER 2005

FORMER UNIVAR USA INC. FACILITY
5353 JILLSON STREET
COMMERCE, CALIFORNIA

RUBICON Engineering Corporation

\\Server01\Projects\1001 Univar\02-Jillson\Progress Reports\2005-30_Progress Report\Fig 6 - PCE in GW 0805.mxd

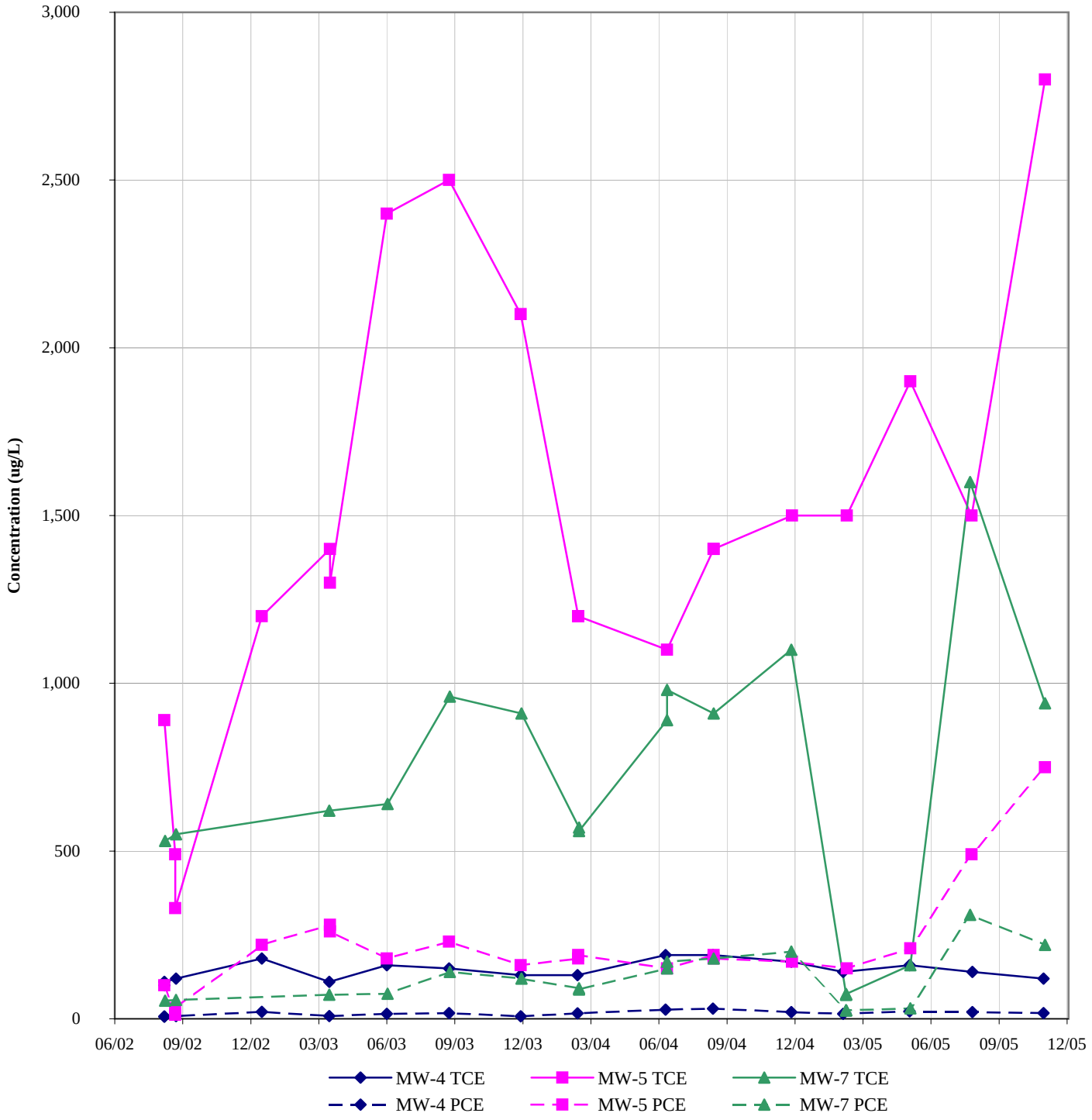

FIGURE 7

TEMPORAL VARIATION OF TCE AND PCE CONCENTRATIONS IN GROUND WATER

FORMER UNIVAR USA INC. FACILITY
5353 JILLSON STREET
COMMERCE, CALIFORNIA

RUBICON
Engineering Corporation

P:\1001 Univar\02 Jillson\Progress Reports\2005 4Q Progress Report\[4q05 Tables.xls]Fig 7 TCE and PCE

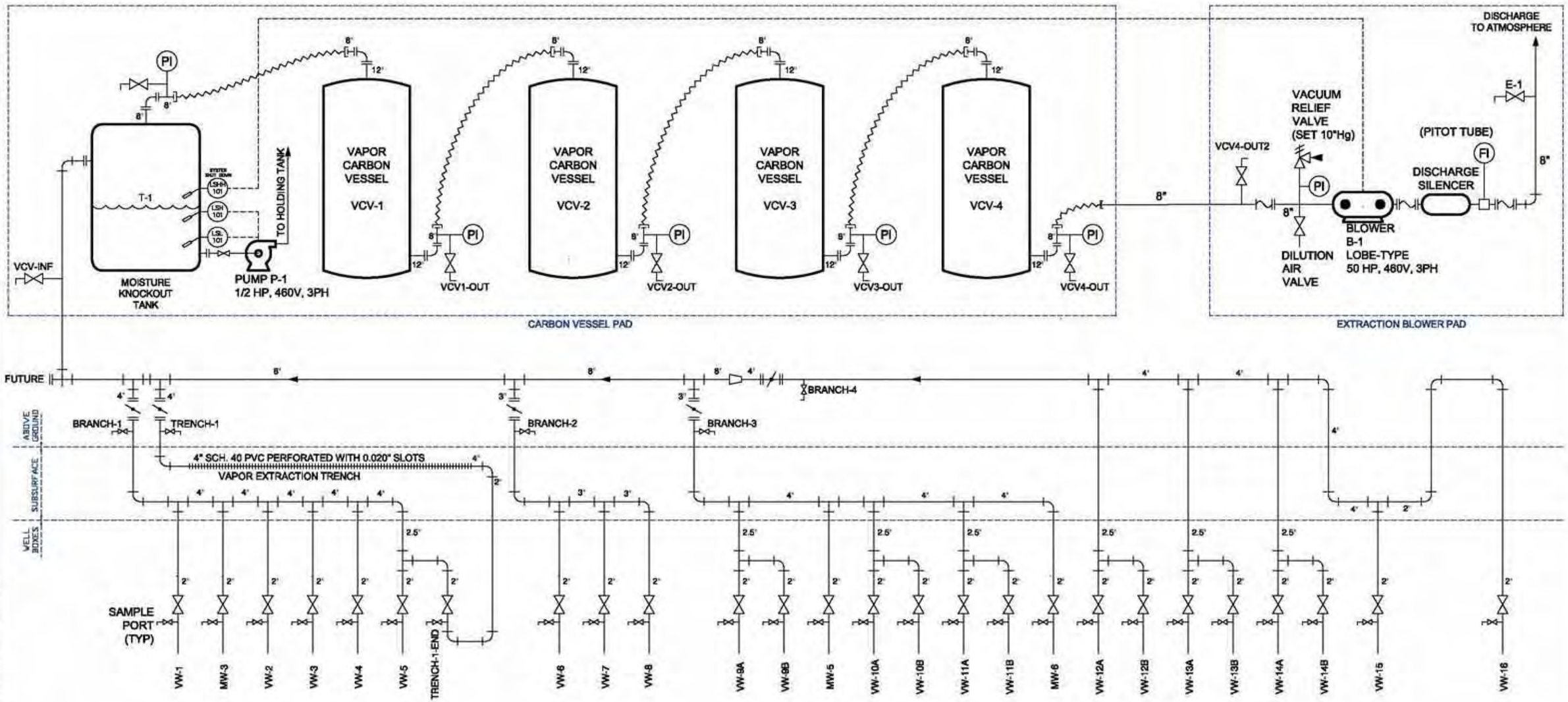

LEGEND

⋈	VALVE (BALL OR GLOBE)
|⁄|	BUTTERFLY VALVE
FI	FLOW INDICATOR
PI	PRESSURE/VACUUM INDICATOR
LSL	LEVEL SWITCH LOW
LSH	LEVEL SWITCH HIGH
LSHH	LEVEL SWITCH HIGH-HIGH

FIGURE 8

SVET SYSTEM SCHEMATIC FLOW DIAGRAM

FORMER UNIVAR USA INC. FACILITY
5353 JILSON STREET
COMMERCE, CALIFORNIA

RUBICON Engineering Corporation

P:\1001 Univar\02 Jillson\Progress Reports\2005 3Q Progress Report\Fig 8 - SchematicFlowDiagram\R2.dwg

LEGEND

- Property Line
- Former USTs
- Vapor Extraction Well
- Ground Water Monitoring Well

1:480

40 0 40 Feet

FIGURE 9

SVET SYSTEM LAYOUT

FORMER UNIVAR USA INC. FACILITY
5353 JILLSON STREET
COMMERCE, CALIFORNIA

RUBICON
Engineering Corporation

P:\1001 Univar\02 Jillson\Indoor air\Induced Vacuum in vapor Monitoring Wells.mxd

LEGEND

- Property line
- Former USTs
- Vapor Extraction Well
- Vapor Monitoring Well
- Ground Water Monitoring Well

1:600

50 0 50 Feet

FIGURE 10

SOIL VAPOR WELL LOCATIONS

FORMER UNIVAR USA INC. FACILITY
5353 JILLSON STREET
COMMERCE, CALIFORNIA

RUBICON
Engineering Corporation

Appendix A

Field Monitoring Records,
Fourth Quarter 2005

RUBICON
Engineering Corporation

Water Level Record

Project Name: Univar USA Inc. Jillson Street
Project Location: Los Angeles, California

Date: 11/07/05
Project Number: 1001.02

Well Designation	Reference Elevation (ft amsl)	Depth to Water (feet)	Water Table Elevation (ft amsl)	Total Depth (feet)	Remarks
MW-1	142.57	87.49		105.00	
MW-2	142.66	88.05		105.00	
MW-3	145.99	90.09		105.00	
MW-4	144.30	89.72		105.00	
MW-5	143.14	85.59		105.00	
MW-6	142.74	87.39		105.00	
MW-7	142.75	86.47		105.00	
MW-8	143.01	86.51		103.00	
MW-9	143.08	86.58		103.00	
MW-10	144.94	89.39		105.00	
MW-11	145.99	~~90.52~~ 88.62		105.00	
MW-12	145.69	~~91.80~~ 89.57		105.00	
MW-13	144.93	90.52		105.00	
MW-14	144.19	91.80		105.50	
MW-15	143.17	~~91.80~~ 89.37		105.00	

RUBICON
Engineering Corporation

FIELD GROUND WATER MONITORING FORM

Project Name: Univar USA Inc. Jillson Street
Project Location: Commerce, California

Date: 11/9/05
Project Number: 1001.02

Well No: MW-1

Notes: DTW = 87.49'
TD = 105'
1 well vol = 2.91 gal 3 well vol = 8.75 gal

Casing Volume	0	1	2	3			
Time	1401	1404	1407	1410			
pH	7.47	7.43	7.44	7.42			
ec (umhos/cm)	975	977	962	972			
Temperature (°F/°C)	69.4	69.9	71.7	72.5			
TDS (ppm)							
Turbidity (NTUs)	>999	>999	150	27			
Dissolved O_2 (mg/l)							

Comments:

RUBICON
Engineering Corporation

FIELD GROUND WATER MONITORING FORM

Project Name: Univar USA Inc. Jillson Street
Project Location: Commerce, California

Date: 11/7/05
Project Number: 1001.02

Well No: MW-2

Notes: DTW = 88.05'
TD = 105'
1 well vol ≈ 11.3 gal 3 well vol ≈ 33.90 gal

Casing Volume	0	1	2	3			
Time	1237	1245	1257	1310			
pH	7.30	7.23	7.24	7.32			
ec (umhos/cm)	1122	884	888	877			
Temperature (°F/°C)	79.7	76.8	76.9	76.2			
TDS (ppm)							
Turbidity (NTUs)	200	55	11	4.4			
Dissolved O_2 (mg/l)							

Comments:

RUBICON
Engineering Corporation

FIELD GROUND WATER MONITORING FORM

Project Name: Univar USA Inc. Jillson Street
Project Location: Commerce, California

Date: 11/7/05
Project Number: 1001.02

Well No: MW-3

Notes: DTW = 90.09'
TD = 105'
1 well vol ≈ 9.94 gal 3 well vol ≈ 29.82 gal

Casing Volume	0	1	2	3			
Time	1410	1420	1430	1441			
pH	7.22	7.19	7.11	7.21			
ec (umhos/cm)	1007	974	982	982			
Temperature (°F/°C)	76.7	74.7	74.2	76.7			
TDS (ppm)							
Turbidity (NTUs)	500	310	250	72			
Dissolved O_2 (mg/l)							

Comments:

RUBICON
Engineering Corporation

FIELD GROUND WATER MONITORING FORM

Project Name: Univar USA Inc. Jillson Street
Project Location: Commerce, California

Date: 11/9/05
Project Number: 1001.02

Well No: MW-4

Notes: DTW = 89.72'
TD = 105'
1 well vol = 10.15 gal 3 well vol = 30.56 gal

Casing Volume	0	1	2	3			
Time	1105	1120	1135	1149			
pH	7.49	7.34	7.33	7.47			
ec (umhos/cm)	809	782	787	785			
Temperature (°F/°C)	71.1	72.1	72.7	72.6			
TDS (ppm)							
Turbidity (NTUs)	140	30	10	9.4			
Dissolved O_2 (mg/l)							

Comments:

RUBICON
Engineering Corporation

FIELD GROUND WATER MONITORING FORM

Project Name: Univar USA Inc. - Bonnie Beach
Project Location: Los Angeles, California

Date: 11/10/05
Project Number: 1001.01

Well No: MW-5

Notes: DTW = 85.59'
TD = 105'
1 well vol ≅ 12.94 gal 3 well vol ≅ 38.82

Casing Volume	0	1	2	3			
Time	1001	1017	1039	1102			
pH	7.11	7.17	7.12	7.19			
ec (umhos/cm)	3327	3354	2827	2446			
Temperature (°F/°C)	72.1	74.0	74.2	74.7			
TDS (ppm)	~~650~~						
Turbidity (NTUs)	650	170	32	14			
Dissolved O_2 (mg/l)							

Comments:

RUBICON
Engineering Corporation