Appendix C:
Generalized Monitoring Well Construction Components

TYPICAL SHALLOW "A"ZONE
MONITORING WELL

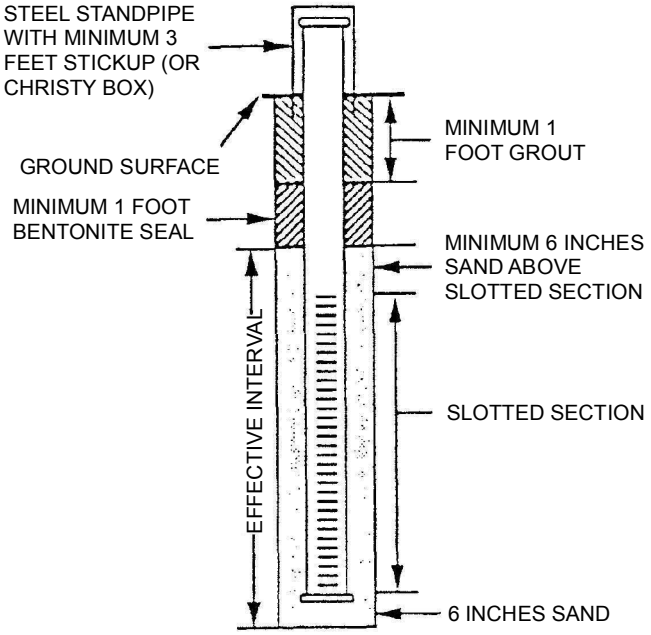

TYPICAL DEEP
MONITORING WELL

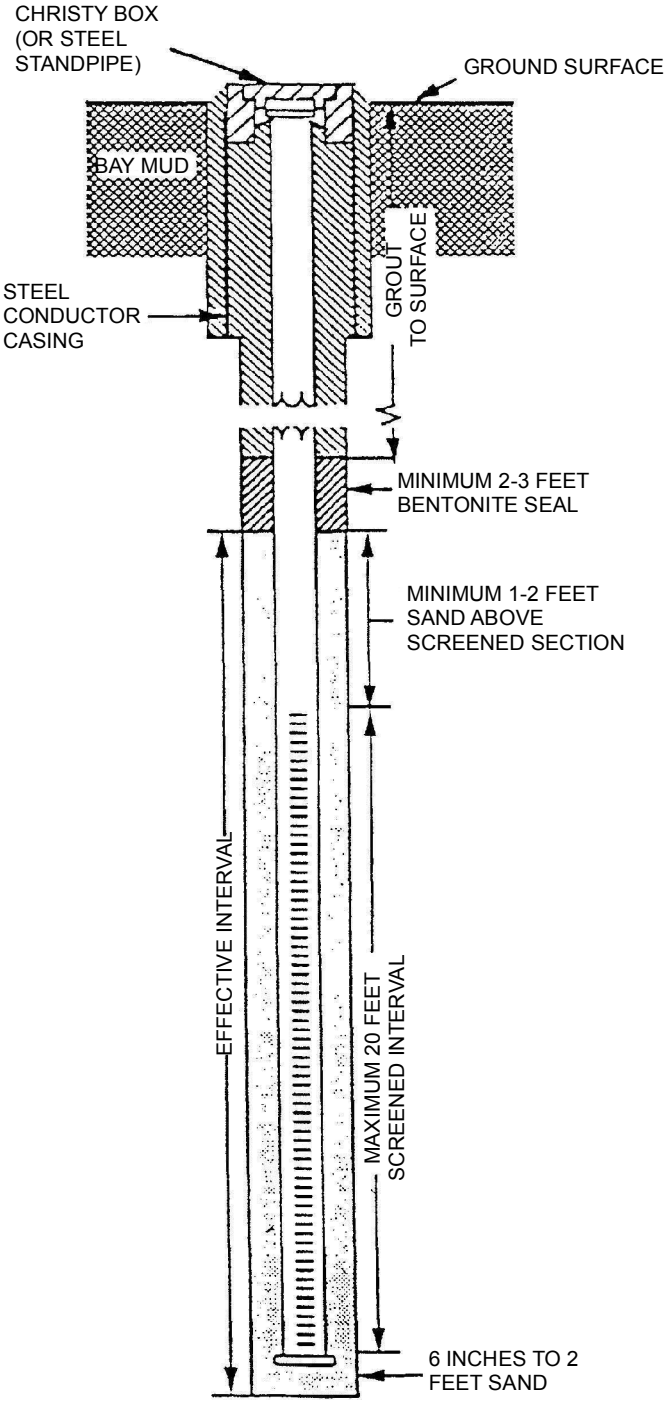

leidos

Generalized Monitoring Well Construction

DATE: 6/2/2014	ANALYST: EHR
REV. 0	APPROVED:

C:\Documents and Settings\roggeel\My Documents\GIS\GIS Data\Well Maintenance\Projects\Figure 2_2014-06-02.MXD

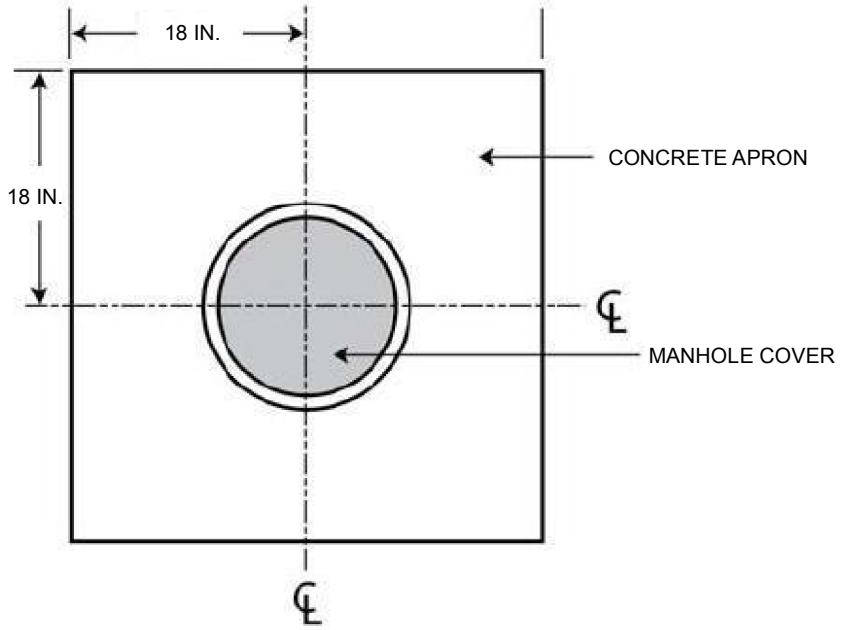

PLAN VIEW

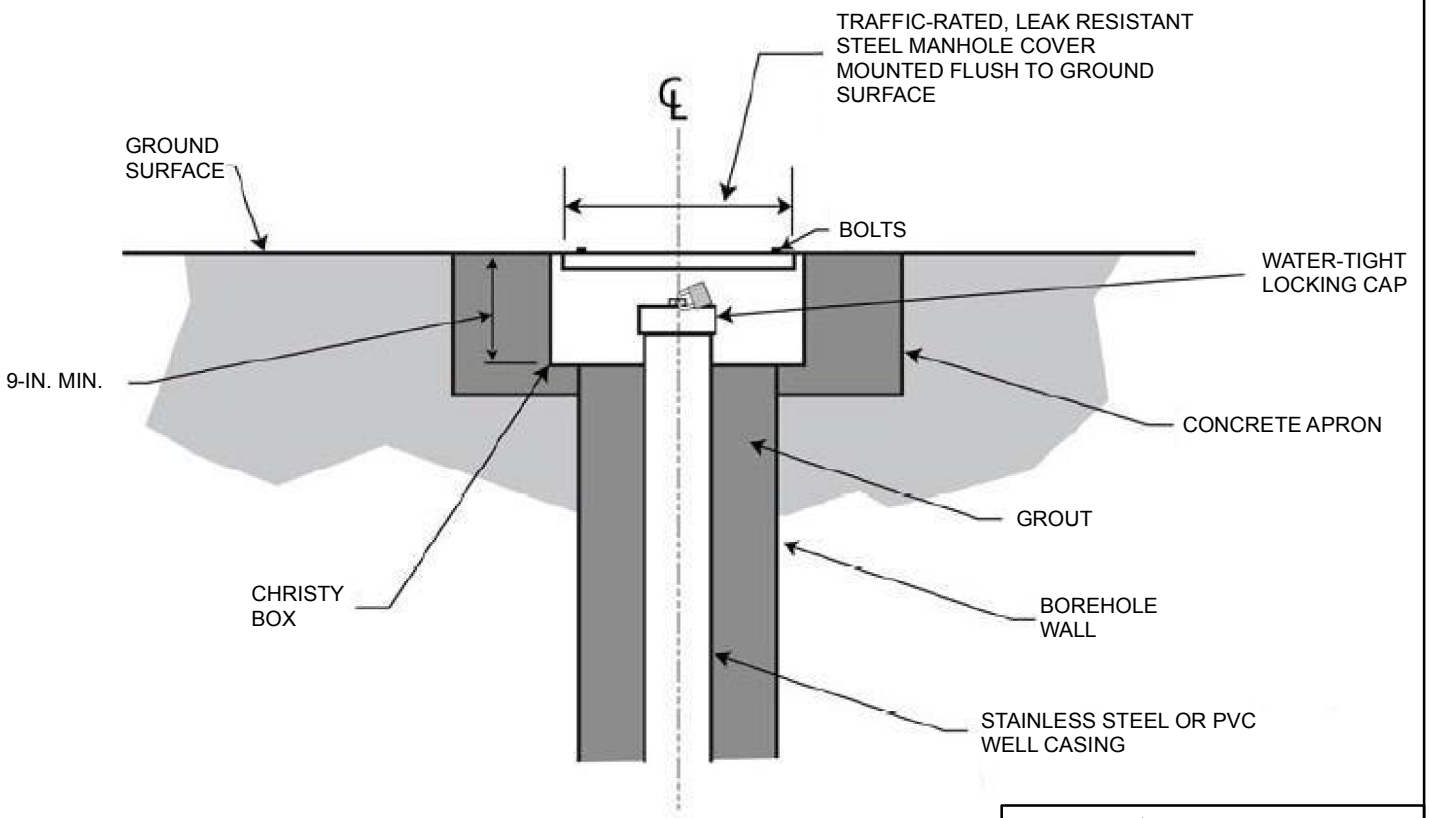

SIDE VIEW

NOTE:
NOT TO SCALE

leidos

Generalized Schematic for Wells Completed with Flush-Mount Christy Box

DATE: 6/2/2014	*ANALYST: EHR*
REV. 0	*APPROVED:*

C:\Documents and Settings\roggeel\My Documents\GIS\GIS Data\Well Maintenance\Projects\Figure X2_2014-06-02.MXD

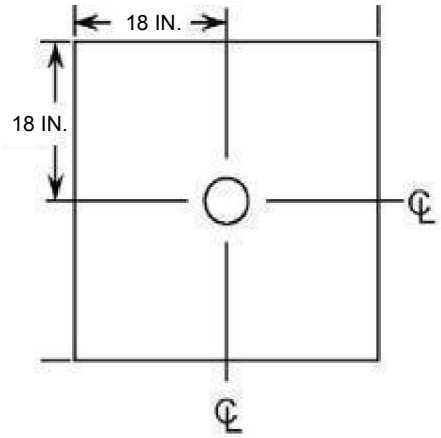

PLAN VIEW

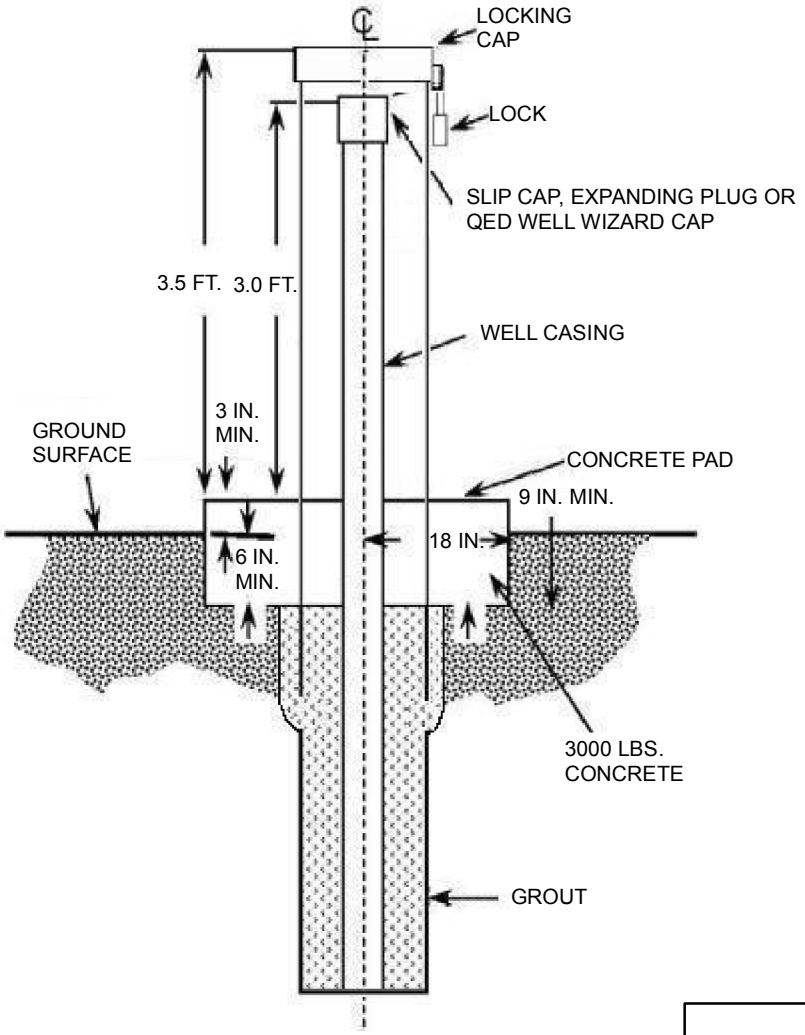

SIDE VIEW

NOTE:
NOT TO SCALE

leidos

Typical Concrete Pad

DATE: 6/2/2014	*ANALYST: EHR*
REV. 0	*APPROVED:*

C:\Documents and Settings\roggeel\My Documents\GIS\GIS Data\Well Maintenance\Projects\Figure X7_2014-06-02.MXD

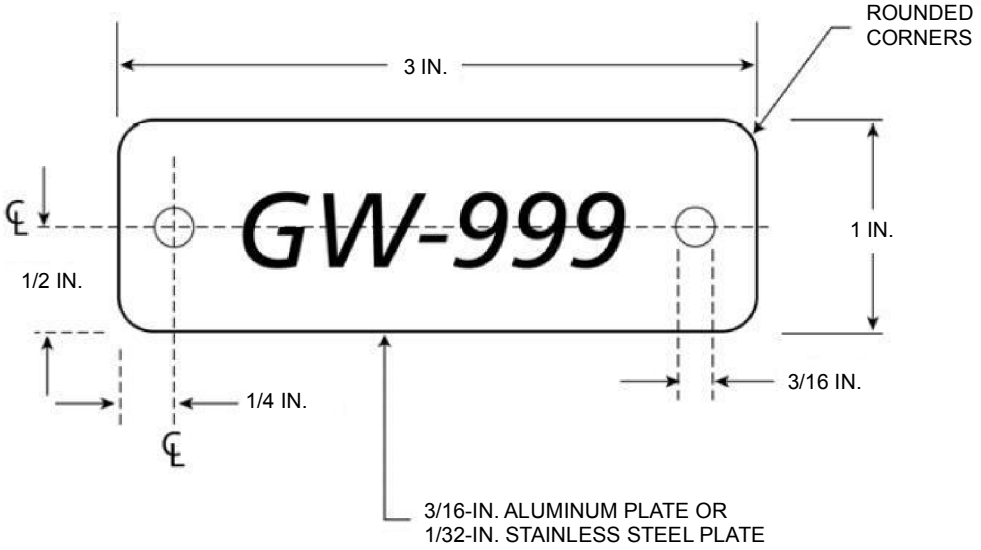

NUMBERS MUST BE STAMPED OR ECHED INTO THE PLATE, AND THEN BLACKENED FOR HIGHER VISIBILITY

NOTE:
NOT TO SCALE

leidos

Typical Well Identification Tag

DATE: 6/2/2014	*ANALYST: EHR*
REV. 0	*APPROVED:*

C:\Documents and Settings\roggeel\My Documents\GIS\GIS Data\Well Maintenance\Projects\Figure X5_2014-06-02.MXD

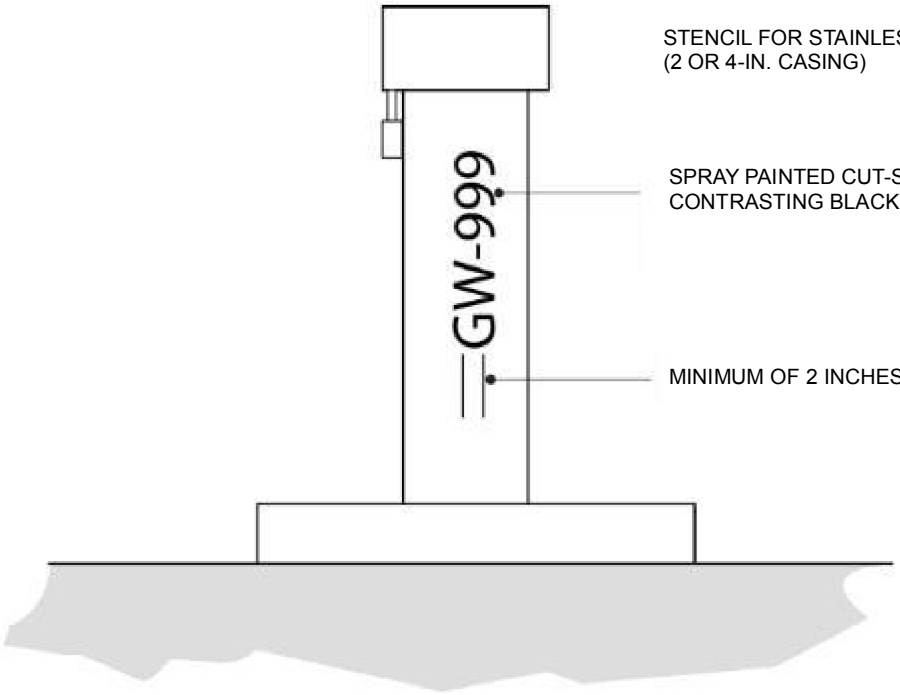

STENCIL FOR STAINLESS STEEL CASING
(2 OR 4-IN. CASING)

SPRAY PAINTED CUT-STENCILS WITH
CONTRASTING BLACK PAINT

MINIMUM OF 2 INCHES IN HEIGHT

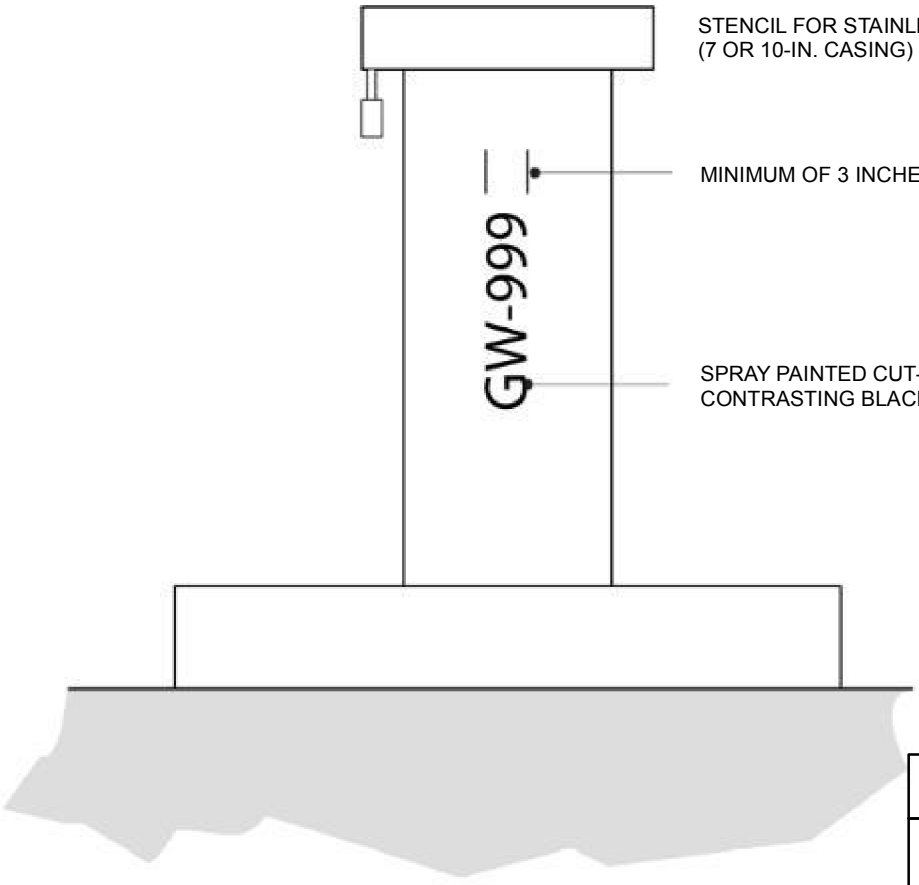

STENCIL FOR STAINLESS STEEL CASING
(7 OR 10-IN. CASING)

MINIMUM OF 3 INCHES IN HEIGHT

SPRAY PAINTED CUT-STENCILS WITH
CONTRASTING BLACK PAINT

NOTE:
NOT TO SCALE

leidos

Typical Casing Stencils

DATE: 6/2/2014	*ANALYST: EHR*
REV. 0	*APPROVED:*

C:\Documents and Settings\roggeel\My Documents\GIS\GIS Data\Well Maintenance\Projects\Figure X6 2014-06-02.MXD

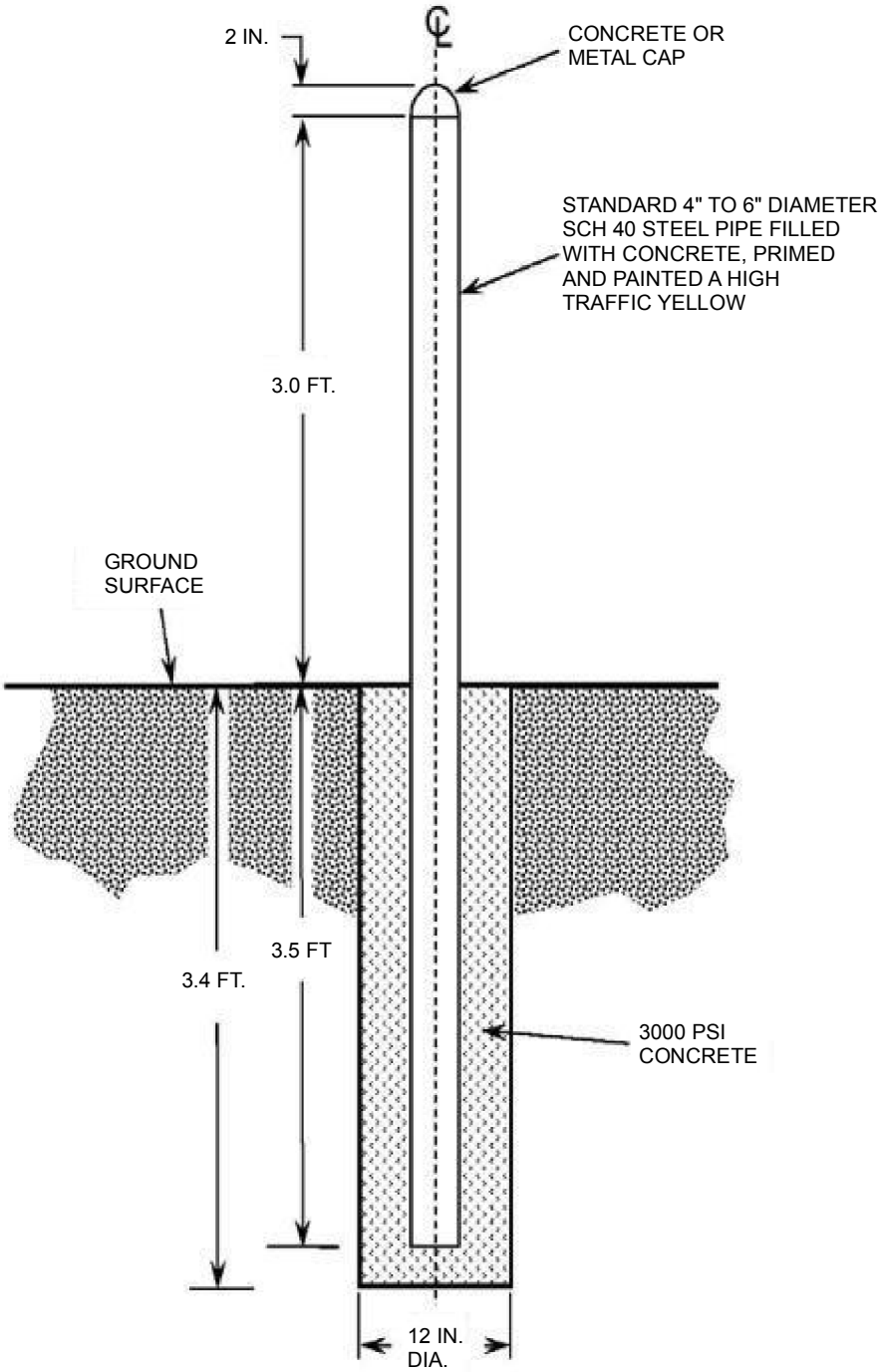

NOTE:
NOT TO SCALE

leidos

Typical Guard Post

DATE: 6/2/2014	*ANALYST: EHR*
REV. 0	*APPROVED:*

C:\Documents and Settings\roggeel\My Documents\GIS\GIS Data\Well Maintenance\Projects\Figure X8 2014-06-02.MXD

Appendix O
Statistical Evaluation Plan for Groundwater Self-Monitoring and Reporting Program (May 28, 2015)

FINAL REPORT

STATISTICAL EVALUATION PLAN FOR THE REVISED SELF-MONITORING AND REPORTING PROGRAM, ORDER NO. R2-2011-0036

CHEVRON RICHMOND REFINERY RICHMOND, CALIFORNIA

Prepared for
Chevron Environmental Management Company
Richmond, California

May 28, 2015

URS
1333 Broadway, Suite 800
Oakland, California 94612

26819196.9404

TABLE OF CONTENTS

Section 1. INTRODUCTION 1

Section 2. STATISTICAL EVALUATION METHODOLOGY 3

2.1 Statistical Evaluation Methodology for Corrective Action Monitoring Program (CAMP) 3

2.2 Statistical Evaluation Methodology for Detection Monitoring Program (DMP) 5

Section 3. ANALYSIS OF HISTORICAL GROUNDWATER DATA 11

Section 4. SUPPORTING DOCUMENTS 12

Section 5. REFERENCES 13

Figures

Figure 1 Flowchart of Statistical Evaluation Methodology for Corrective Action Monitoring Wells

Figure 2 Flowchart of Statistical Evaluation Methodology for Detection Monitoring Wells

Tables

Table 1 Landfarm Area Monitoring Well Network

Table 2 Refinery-wide Monitoring Well Network

Table 3 Summary of Proposed Statistical Methods

This Statistical Evaluation Plan (SEP) presents the approach and methods of the statistical analysis on the results of the groundwater monitoring activities at the Chevron Richmond Refinery (the Refinery) located at 841 Chevron Way, Richmond, Contra Costa County, California. This activity is designed to support a quantitative evaluation of the effectiveness of the corrective action at the facility, as required by the California Regional Water Quality Control Board (RWQCB), San Francisco Bay Region, per Title 22, California Code of Regulations, Sections 66265.97(e)(7) and 66265.97(e)(17).

Specifically, the statistical evaluation and trend analysis supports the Revised Self-Monitoring and Reporting Program (dated January 22, 2014) in association with Updated Waste Discharge Requirements and Recission of Order No. 00-043 (Order No. R2-2011-0036) and Site Cleanup Requirements (Order No. R2-2012-0015). This SEP updates the previously proposed plan, "Statistical Evaluation Plan for the Landfarm Area, Groundwater Self-Monitoring and Reporting Program, Order No. 00-043," submitted to and approved by RWQCB and California Department of Toxic Substances Control (DTSC) on October 18, 2002. This SEP applies to the Landfarm area groundwater monitoring, as well as all relevant sectors of the Refinery.

The main purpose of this Statistical Evaluation Plan is to describe the statistical methods that will be used to evaluate historic and continued monitoring data as well as the effectiveness of corrective action systems with respect to containing or minimizing (reducing or eliminating) impacts to "A" and "C" Zone groundwater quality. According to the applicable and relevant regulations, the statistical evaluation of well monitoring results should include trend analyses and control charts for the organic and inorganic monitoring parameters and constituents of concern (COCs). The statistical analysis is an essential though preliminary step in establishing concentration trends and evaluating the overall effectiveness of the remedial actions at the facility.

The program provides piezometric and chemical monitoring for the monitoring parameters and COCs at the Refinery in the "A" and "C" Water-Bearing Zones ("A" and "C" Zones) along a point of compliance (POC). The POC is defined as a vertical surface located at the hydraulic downgradient limit of the waste management unit, which generally coincides with the Groundwater Protection System (GPS), where present.

In the Landfarm area, the objective of "A" Zone piezometric monitoring is to demonstrate that the GPS is maintaining a hydraulic barrier at its perimeter. Chemical monitoring in the "A" Zone supplements piezometric monitoring in evaluating the effectiveness over time of the GPS corrective action activities, i.e., a Corrective Action Monitoring Program (CAMP). Chemical monitoring in the "C" Zone verifies that water quality below the Bay Mud at the POC has not been degraded and is considered to be a Detection Monitoring Program (DMP). The Landfarm area is subdivided into two sectors: Landfarm 1 and Landfarms 2-5. Table 1 shows the identification of these wells and some of the associated features. Of the total of twenty monitoring wells, groundwater samples were collected and analyzed in all of them historically, in a period up to twenty-five years.

Outside the Landfarm area, the Refinery is divided into ten geographic sectors: Alkane, Bayside North, Bayside South, Castro, Effluent, Interior "C" Zone, Landfill 15, North Yard, Pollard, and Reclamation. The objective of "A" Zone chemical monitoring in these sectors is the same as in the Landfarm area, namely, to evaluate the effectiveness of the GPS as a part of the CAMP.

Based on prior monitoring results, the “C” Zone wells in these ten refinery sectors are also considered to be corrective action monitoring wells and are evaluated for any statistical trends and changes, similar to the “A” Zone wells in the Landfarm area and the refinery sectors. Table 2 shows the identification of these wells and some of the associated features. Of the total of sixty-two monitoring wells, groundwater samples were collected and analyzed in all of them historically, in a period up to twenty-five years.

The monitoring parameters and constituents of concern (COCs) of each well and the proposed monitoring frequency are listed in Tables 2 and 4 of the document Revised Self-Monitoring and Reporting Program (dated January 22, 2014). Additional analytes as listed in Appendix IX of 22 CCR 66264 may be added to the list of COCs for all Landfarm wells if they are detected in the future.

The statistical evaluation methodology follows the guidance provided in the *Guidance Document: Monitoring Requirements for Permitted Hazardous Waste Facilities*, prepared by Hazardous Waste Management Program, DTSC (July 2001), and *Statistical Analysis of Groundwater Monitoring Data at RCRA Facilities – Unified Guidance* (USEPA, 2009). The methodology will comply with the performance standards outlined in California Code of Regulations, Title 22, Section 66264.97(e) and also described in Section 2 of Appendix C of the DTSC monitoring guidance document.

Because the monitoring objectives for Corrective Action Monitoring Program (CAMP) and Detection Monitoring Program (DMP) are different, different methods of statistical evaluation are appropriate for these two programs and are described separately below.

2.1 STATISTICAL EVALUATION METHODOLOGY FOR CORRECTIVE ACTION MONITORING PROGRAM (CAMP)

All "A" Zone wells inside and outside of the Landfarm area (which include wells labeled as "AT," "CT," and "F" Zone), and all "C" Zone wells outside the Landfarm area will be monitored under a Corrective Action Monitoring Program (CAMP). The basic monitoring objective is to evaluate whether the corrective actions are working. Figure 1 shows the flowchart of the statistical evaluation methodology for CAMP. The main steps are:

1. Identify and compile historical groundwater data.
2. Perform exploratory data analysis (EDA).
    - Prepare a table of basic summary statistics for detected monitoring parameters and COCs.
    - Prepare box-and-whisker plots for detected monitoring parameters and COCs.
3. Prepare time series plots for detected monitoring parameters and COCs.
4. If sufficient data are available, evaluate seasonal effects.
5. Where appropriate, perform trend analysis.
6. Evaluate whether CAMP is working or may require changes.

A brief description of each step follows.

1. Identify and compile historical groundwater data.

The historic data will include data collected from 1994 through the current monitoring period (data prior to 1994 may be used if appropriate, particularly if number of sampling periods is less than thirteen, which is the minimum number of samples required in the case of non-parametric statistical testing). If there are significant changes in testing parameters or methodologies (such as significant changes in practical quantitation limit (PQL)), more recent data may be used to reflect the current laboratory testing procedures, and older, less reliable historic data will be excluded if there is sufficient evidence indicating that these data do not appropriately reflect the historic baseline and/or current trend.

The historic and current data will be stored in a web-based GIS-featured database called LocusFocus™. The required data will be extracted and compiled in Microsoft Excel format for data and statistical analysis, and include information such as monitoring well identification, zone, sector name, sampling date, sample identification, name of chemical parameter, detected concentration, method detection limit (MDL), practical quantitation limit (PQL), and data qualifiers, if any.

2. Perform exploratory data analysis (EDA).

The objective of the exploratory data analysis is to discover trends and patterns in the data so that appropriate approaches and limitations in using the data sets could be identified. Both numerical and graphical methods of EDA may be used. For purposes of EDA, it is reasonable to replace any non-detect values with half of the corresponding PQL.

The numerical methods will include a table of basic summary statistics such as mean, standard deviation, minimum, median, and maximum, for each combination of wells and monitoring parameters/COCs. These statistics will be used to make inferences concerning the population from which the sample data are drawn. The number of sampling periods, detection rate, maximum allowable concentration limit (MACL), and median PQL will also be provided for further insights. The first and last sampling dates of each combination of wells and monitoring parameters/COCs will be included for temporal references.

Graphical methods will include box-and-whisker plots. Box-and-whisker plots will be prepared to show the concentrations of each detected analyte over different monitoring wells (i.e., a multi-well, single constituent plot). These plots will be used to assess any systematic spatial differences in concentrations in the corrective action monitoring wells.

3. Prepare time series plots for detected monitoring parameters and COCs.

Time series plots will be prepared to show historical concentrations of each detected analyte for different monitoring wells at the site (again, a multi-well, single constituent plot). For purposes of these plots, it is appropriate to replace non-detect values with PQL (or median PQL if multiple PQLs existed). The plots will be reviewed to assess changes in water quality over time. Any extreme values (“outliers”) will be identified and checked for accuracy and relevance. Where appropriate, such values may be revised (e. g., if an error is identified) or excluded from evaluation (if found to be non-representative). For each constituent, the time series plot will show the corresponding MACL so that concentrations could be compared against these limits.

4. If sufficient data are available, evaluate seasonal effects.

The quarterly/semi-annual sampling data available from 1994 will be used to evaluate seasonal effects. In the presence of possible annual trends in the data, a paired-data test is appropriate to check for seasonal effects. The Wilcoxon Signed-Rank test, which is a non-parametric test, will be used to compare the annual differences in concentrations between the first semester (February to July; Spring-Summer) and the second semester (August to January; Fall-Winter) over all monitoring years. If systematic seasonal effects are observed and verified, the trend analysis (described in the next step) will be performed taking into account the presence of such effects.

5. Where appropriate, perform trend analysis.

If at least 8 data points were available and the detection rate is more than 25%, we will use the non-parametric Mann-Kendall test to evaluate for time trends. If there are significant seasonal effects, the Mann-Kendall test will be applied only to data collected from the same semester each year. If the number of data points is less than 8, but at least 4, and the detection rate is more than 25%, the trend test may be performed, but its results would be considered to be preliminary and used only for a qualitative assessment. The trend test will not be applied if the number of data points is less than 4 or if the detection rate is less than 25%. In this case, only the time series plots will be used to understand the nature of the data.

If the trend test shows a decreasing trend, this will be taken as an indication that the site-specific corrective action(s) are working effectively in the corrective monitoring wells for the analyte under evaluation. If the data show an increasing trend and this increasing trend was not determined in previous sampling events (i.e., a new upward trend), the trend will be evaluated again with a verification sample collected within 120 days, or the next monitoring data point if collected within 120 days. If the upward trend is confirmed, further investigation and/or assessment may be conducted to understand the possible causes/sources of the trend.

6. Evaluate whether CAMP is working or may require changes.

The results of the previous steps will be reviewed to evaluate whether the chemical concentrations are showing a downward trend or appear to be stabilized below the maximum allowable concentration limits (MACLs). Such results will indicate that the site-specific corrective actions are working effectively in the corrective monitoring wells. If the results suggest that the corrective actions may not be working (e.g., a consistent upward trend is observed), the scope and nature of the corrective actions may be modified as appropriate.

2.2 STATISTICAL EVALUATION METHODOLOGY FOR DETECTION MONITORING PROGRAM (DMP)

The “C” Zone in the Landfarm area will be monitored under a Detection Monitoring Program (DMP). The basic monitoring objective will be to detect the earliest possible release of constituents of concern into “C” Zone, if such a release were to occur. The intrawell comparison method will be used to compare recent data against historic (“baseline”) data that are verified to be unimpacted by the facility operation. WDR No. 00-043 notes that, based on 13 years (at that time) of chemical data, there is no indication that the “C” Zone groundwater has been significantly impacted. Therefore, the historic data should provide a reasonable baseline condition of no significant facility impact.

The facility has been in operation for more than a century and the spatial pattern of facility operations and other nearby industrial activities may have changed many times during this period. Therefore, it is not possible to identify background (upgradient) wells close to the site that may not have been impacted by the facility operations or other off-site sources over the years. Furthermore, box-and-whisker plots of the historical data (described in Step 2) confirm the presence of systematic spatial variability on chemical concentrations. For these reasons, the

interwell method, in which background limits are established based on upgradient wells, is not appropriate.

Figure 2 shows the flowchart of the statistical evaluation methodology for detection monitoring wells. The main steps are:

1. Identify and compile historical groundwater data (baseline data).
2. Perform exploratory data analysis (EDA).
    - Prepare a table of basic summary statistics for detected monitoring parameters and COCs.
    - Prepare box-and-whisker plots for detected monitoring parameters and COCs.
    - Prepare time series plots for detected monitoring parameters and COCs.
    - Test for outliers based on graphical displays and outlier test.
    - Check for any seasonal effects.
3. Perform trend analysis.
4. Evaluate whether baseline data without a trend can be identified.
5. Develop control charts using the baseline data.
6. Evaluate whether monitoring data are “in control”.

A brief description of each step follows.

1. Identify and compile historical groundwater data (baseline data).

This step is identical as Step 1 of Section 2.1.

2. Perform exploratory data analysis (EDA).

The objective of the exploratory data analysis is to discover trends and patterns in the data so that appropriate approaches and limitations in using the data sets could be identified. Both numerical and graphical methods of EDA may be used. For purposes of EDA, it is reasonable to replace any non-detect values with half of the corresponding PQL. The numerical methods will include a table of basic summary statistics such as mean, standard deviation, minimum, median, and maximum, for each combination of wells and monitoring parameters/COCs in “C” Zone of the Landfarm area. These statistics can be used to make inferences concerning the population from which the sample data were drawn. The first and last sampling dates of each combination of wells and monitoring parameters/COCs will also be provided for temporal references.

Graphical methods include box-and-whisker plots and time series plots. Box-and-whisker plots show the concentrations of a given analyte for wells within the monitoring network in the Landfarm area’s “C” Zone (i.e., a multi-well, single constituent plot). Time series plots will illustrate historical concentrations of a given analyte over a period of time (also a multi-well, single constituent plot). These graphical displays will be used to identify patterns and relationships within the data, confirm or disprove hypotheses, and identify potential problems (such as potential outliers or presence of bi-modal distribution).

If the graphical displays of data indicate the presence of any extreme values ("outliers"), such values will be checked for accuracy and relevance. If necessary, a formal test (such as the Dixon's test or Rosner's test) may be used to assess whether one or more data points are potential outliers. Such values may be revised (e. g., if an error is identified) or excluded from evaluation (if found to be non-representative).

Results of EDA will also be used to evaluate any seasonal effects. In the presence of possible annual trends in the data, a paired-data test is appropriate to check for seasonal effects. The Wilcoxon Signed-Rank test, which is a non-parametric test, will be used to compare the annual differences in concentrations between the first semester (February to July; Spring-Summer) and the second semester (August to January; Fall-Winter) over all monitoring years. If systematic seasonal effects are observed, the statistical test will be adjusted to account for these effects.

For the organic parameters in the "C" Zone of Landfarm area, the California Nonstatistical Method (DTSC 2001) may be used in lieu of Steps 3 through 6 if more than 90% non-detects were observed in the historic ("background") data (WDR Boiler Plate, 1992). In this method, the background limits are based on the PQL. If a compound exceeds its PQL during monitoring, the evaluator will first validate with the laboratory performing the test to ensure that no evidence of sample contamination exists (due to large number of samples tested in this plan) and the QA/QC procedures are followed for the laboratory standard practice. Because of changing PQL over time, historic PQLs will be used for comparison to ascertain that the exceedance is not an artifact of lowered PQLs during monitoring periods and it is evident that the compound in question is above the background/baseline value.

If exceedance of an organic parameter in the "C" Zone of Landfarm area has been confirmed, Chevron will notify DTSC and RWQCB within seven days that evidence of a release may have occurred and a verification procedure of resampling will be initiated per California Code of Regulation Title 22, Section 66264.98(j). If the resampling confirms the detection is valid, Chevron may consider increasing the sampling frequency of such a compound in order to develop a valid statistical database. If the compound is proven to be statistically significant above the background limit, further assessment may be implemented as agreed to by Chevron, RWQCB, and/or DTSC.

Other indications of evidence of release may also be evaluated for the organic parameters in the "C" Zone of Landfarm area. For example, if two or more compounds are detected at trace levels (i.e., between Method Detection Limit (MDL) and PQL) in the same sampling location for a given sampling period, or if the same compound is detected at trace levels in two successive events, the evaluator will conduct further assessments such as confirming data validation (i.e., verifying that cross contamination or other factors contributing to inaccurate results have not occurred) and confirming QA/QC of the analytical data. Furthermore, historic MDLs and PQLs will be compared with current limits before drawing a statistically valid inference. Other interpretations of an exceedance of an organic parameter may be considered in the EDA and data analysis process, and professional judgment will be used with caution to determine if evidence of a release exists and to circumvent the possibility of future high false positive rates, with the consideration of a verification procedure of resampling noted above.

3. Perform trend analysis.

The objective of the trend analysis is to evaluate whether the historic data show a statistically significant trend (upward or downward) over time. If the data show no significant trend, they will be used as baseline data in constructing "control charts" as described in the following steps. The non-parametric Mann-Kendall test will be used to detect trends. Guidance publications provided by USEPA (2006, 2009) and Gilbert (1987) recommend the use of this method for evaluating time trends in the data. The Mann-Kendall test is a "robust" test because the data need not to conform to any specific distribution (such as normal or lognormal) and the test accommodates missing values, non-detects, and multiple detection limits (Gilbert, 1987). If there are significant seasonal effects, the Mann-Kendall test will be applied only to data collected from the same semester each year.

A minimum sample size of eight is generally recommended for any formal statistical test (Gibbons, 1994). If the sample size is less than eight, but more than four, the trend test may be performed, but its results would be considered to be preliminary and used only for a qualitative assessment. Any non-detect results will be replaced by PQL (or median PQL if multiple PQLs existed in the historic data). The trend test will not be applied if the sample size is less than four. In that case, only the EDA results will be used to understand the nature of the data.

4. Evaluate whether baseline data without a trend can be identified.

If the historic data show no significant trend, the data set will be used as baseline data to develop a control chart. If a trend is evident, an evaluation will be made as to whether consecutive historic data in the more recent period exhibit a significant trend. If this portion of historic data do not show any significant downward or upward trend, they will be used as baseline data to develop a control chart.

If a trend is present consistently in the historic data (i.e., neither all nor a portion of historic data can be evaluated as no trend) and consequently no appropriate baseline data can be identified to develop a control chart, the following analytical steps will be followed:

- If the historic data show a consistent significant downward trend, the parameter will continue to be monitored, and no control chart will be constructed.
- If the historic data show a consistent significant upward trend, the trend will be evaluated again with the next monitoring data point, and no control chart will be constructed at the moment. If the upward trend is confirmed, further investigation and/or assessment may be conducted to evaluate whether the trend is attributable to site-specific sources or it is caused by off-site sources. If the upward trend is not confirmed, the chemical will continue to be monitored.

5. Develop control charts using the appropriate baseline data.

Baseline data that do not show a significant trend will be used to develop a control chart for a given analyte. A control chart is an intra-well (i.e., a single well) method of evaluating whether on-going monitoring data are "in control" based on the limits established using proper baseline data. The use of the intra-well method avoids the influence of any systematic, spatial variability

in the groundwater data and thus reduces the potential for false positive and false negative errors (ASTM, 1998; Gibbons, 1994).

The combined Shewhart-CUSUM control charts will be prepared to evaluate the presence of a source and site chemical releases of contamination. The Shewhart control chart is effective in detecting an immediate release, while the CUSUM control chart is effective in detecting a gradual release (i.e., a trend over time).

The control charts will be prepared following the guidelines provided in the ASTM standard (1998) and Gibbons (1994). These guidelines suggest that control charts can be used if the number of baseline data points is at least eight (including both detect and non-detect samples) and the detection frequency is at least 25%. In practice, a larger number of samples and/or a higher detection frequency are more desirable in constructing control charts. Therefore, if the number of samples and/or the detection frequency are close to the minimum requirements, the control chart will be used with caution and professional judgment will be used before drawing conclusions.

Non-detects are replaced by the PQL (or median PQL if there are multiple detection limits (ASTM, 1998)). Although other methods such as Aitchison's or Cohen's method could be used if the detection frequency is between 15 and 50 percent, the ASTM guidelines suggest that the simpler method of replacing non-detects with PQL is adequate in these cases.

Assumptions of data independence, data distribution, and constant variance will be checked to determine the appropriate test methods (parametric versus non-parametric). Data independence will be checked by analyzing the autocorrelation of data points separated by a specified time lag. Shapiro-Wilk W Test will be used to test the normality of data distribution (USEPA, 2006). If the baseline data are normally distributed, the control charts will be constructed using the actual data. If the data are not normally distributed, but are lognormally distributed, the control charts will be developed using log-transformed values. If the data are neither normally nor lognormally distributed, assuming normal distribution is reasonable because the results are generally robust with regard to moderate deviations from normality. In any case, visual inspection of graphical displays (such as histograms) will be used to confirm distributional assumption. The assumption of constant variance will be checked if there are a sufficient number of data points that could be divided into 2 or 3 groups such that each group has at least 4 data points. A test such as the Levene test can then be applied to check whether the groups can be assumed to have the same variance (USEPA, 2006).

The ASTM standard also recommends the use of verification sampling in order to reduce the false positive and false negative error rates. Each time an initial exceedance of control charts is indicated, the affected well will be resampled for verification within 60 days. The ASTM guidelines suggest that the next monitoring data point, if collected within 60 days, may be used as a verification sample. If the verification sample also exceeds the control chart limits, it is taken as a confirmation of the initial indication. If the verification sample does not exceed the limits, the initial suspect value is replaced with the verification value and the monitoring process will be continued.

If the detection frequency is less than 25% and there are at least 13 baseline samples, one option is to use the "non-parametric prediction limit" method (ASTM, 1998). In this method, the baseline limit is set equal to the maximum observed value that is not an outlier. If all values are

non-detects, the baseline limit will be set equal to the PQL. Future monitoring results consistently greater than the baseline limit will warrant further consideration to evaluate its significance in terms of exceedance of baseline conditions.

If the detection frequency is less than 25% and there are less than 13 samples, neither control chart nor "non-parametric prediction limit" method will be applied. In that case, only the EDA results and time series plots will be used to understand the nature of the data.

6. Evaluate whether monitoring data are "in control".

Each round of monitoring data will be plotted on the control chart. An "out of control" condition will be identified when the data value exceeds the Shewhart control limit or the cumulative sum exceeds the CUSUM control limit. In case of an initial exceedance, the verification sample will be used to confirm the exceedance. This verification sample will be taken within 60 days of the initial indication. If the exceedance is confirmed, further investigation and/or assessment may be undertaken to evaluate whether the exceedance is site-related or it is due to off-site sources and other causes such as seasonal fluctuations.

As monitoring continues and the process is shown to be "in control," the baseline data can be updated by including all new data that are "in control." The ASTM standard suggests that such updating may be done at a time interval of one or two years (for quarterly sampling intervals). Because the current DMP varies from semi-annual to biennial basis, such updating will be performed after every eight new samples have been collected. For each update, the mean and standard deviation will be recalculated using the expanded data set, and the trend analysis will be performed on the expanded data set to ensure that no gradual upward or downward trends are observed. These updated parameters will then be used to construct future control charts.

For those parameters for which the non-parametric prediction limit method is to be used, the data from each new monitoring round will be compared against the applicable baseline limit. This limit is the maximum observed value in the baseline data, or the PQL if all baseline data are non-detect. In case of an initial indication of exceeding the baseline limit, again the verification sampling procedure described above will be followed. In evaluating whether a release has occurred, the results of the non-parametric prediction limit method will be supplemented with a qualitative assessment of time series plots. This assessment will include checking of such conditions as a consistent pattern of trace level detections, or detection at or above the applicable PQL, of parameters that are not or rarely detected in the baseline data. If such conditions are identified, further evaluations may be undertaken to assess whether the cause is site-related.

The results of statistical analysis of historical data are provided in each semi-annual monitoring report submitted to RWQCB from 2003 to 2014, which includes a statistical evaluation appendix with the attachments described in Section Four.

The following tables and figures are proposed to be included in future semi-annual monitoring reports to address the items specified in the DTSC Guidance Document (DTSC, 2001).

1. A tabulated summary of historic analytical data for the monitoring parameters and detected COCs, as appropriate (Attachment A).
2. Box-and-whisker plots for the monitoring parameters and detected COCs, as appropriate (Attachment B).
3. Time series plots (Attachment C) and control charts (Attachment D) for the monitoring parameters and detected COCs, as appropriate.
4. A table summarizing the results of intermediate steps in the statistical evaluation, including tests for data independence, data distribution, and constant variance (Attachment E).
5. A flowchart showing proposed methods for determining baseline values of the monitoring parameters and detected COCs, as appropriate (see Figures 1 and 2).
6. A flowchart showing the proposed statistical protocol for the monitoring program (see Figures 1 and 2).
7. Tabulated summary of the proposed statistical methods (see Table 3).
8. Text describing the proposed statistical methods (see the text in the previous sections).

ASTM. 1998. "Standard Guide for Developing Appropriate Statistical Approaches for Ground-Water Detection Monitoring Programs." ASTM Guide D6312-98.

DTSC. 2001. *Guidance Document – Monitoring Requirements for Permitted Hazardous Waste Facilities.*

Gibbons, R. D. 1994. *Statistical Methods for Groundwater Monitoring*. John Wiley & Sons, Inc., New York.

Gilbert, Richard O. 1987. *Statistical Methods for Environmental Pollution Monitoring*. Van Nostrand Reinhold, New York.

USEPA. 2006. *Data Quality Assessment: Statistical Methods for Practitioners*. EPA QA/G-9S.

USEPA. 2009. *Statistical Analysis of Groundwater Monitoring Data at RCRA Facilities – Unified Guidance.* EPA 530-R-09-007.

WDR Boiler Plate. 1992. Boiler Plate for Article 5 WDR Revisions. Chapter 15 Technical Note #4.

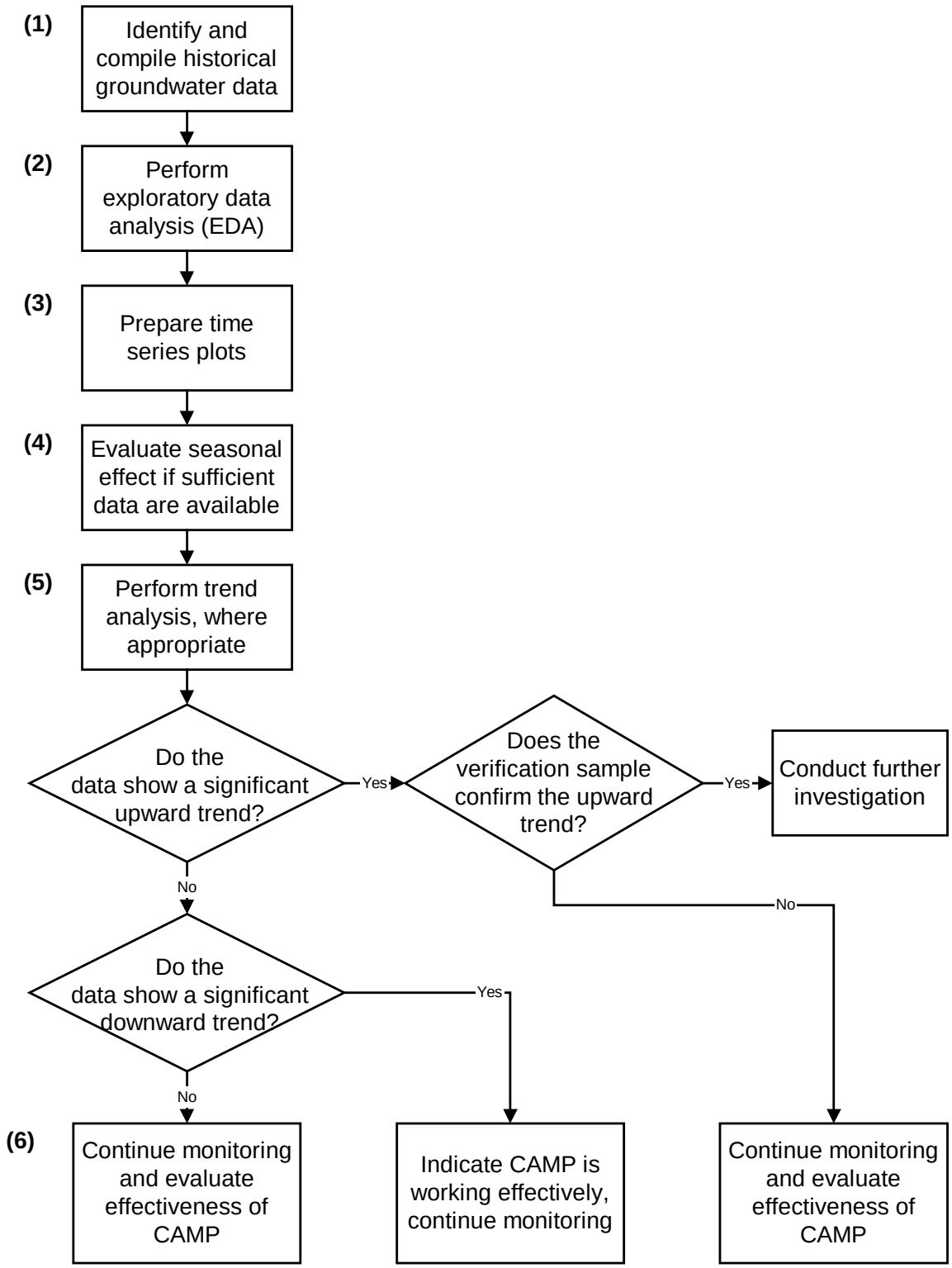

Figure 1. Flowchart of Statistical Evaluation Methodology for Corrective Action Monitoring Wells

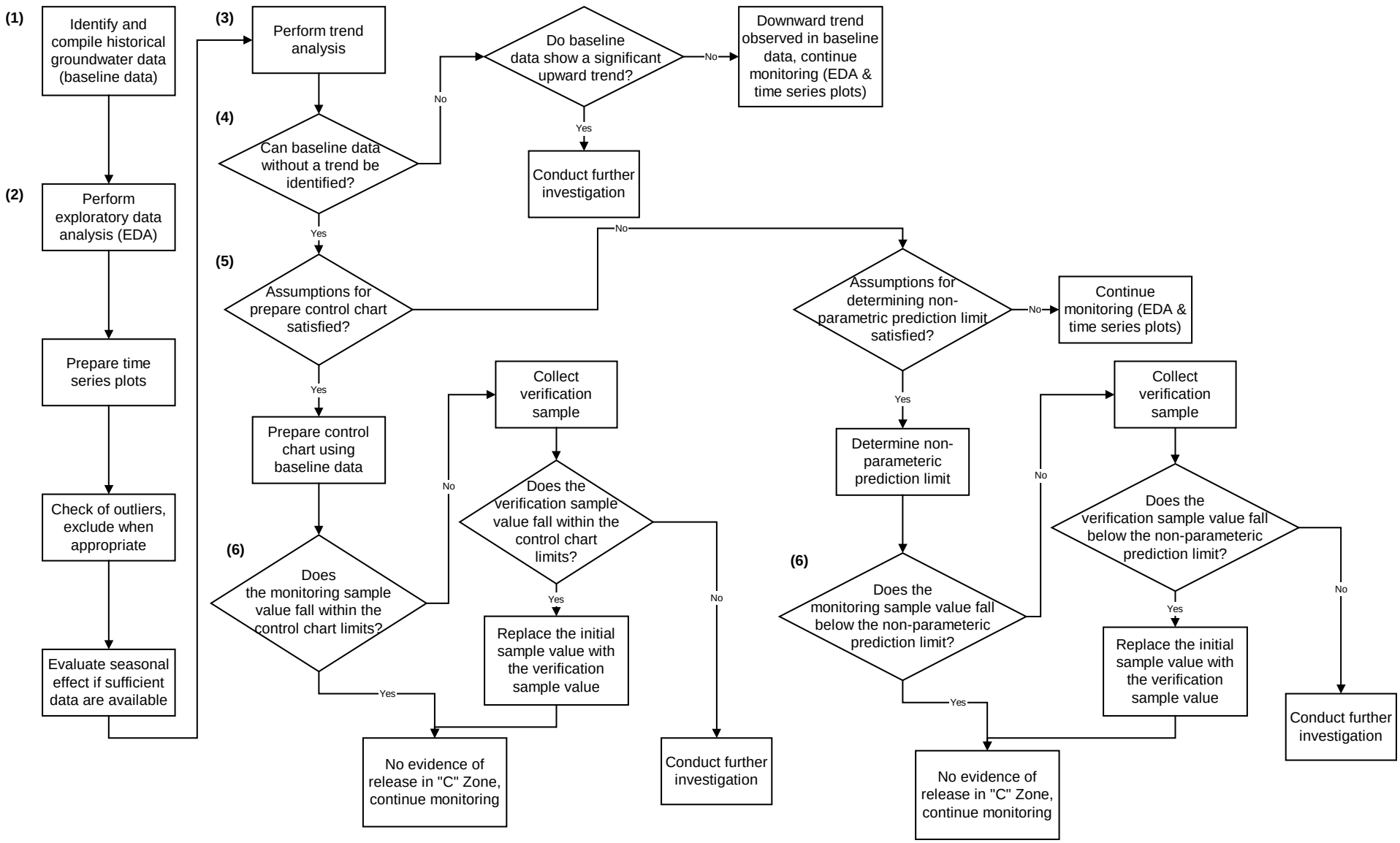

Figure 2. Flowchart of Statistical Evaluation Methodology for Detection Monitoring Wells

Sector Name	Zone	Well	POC Well	Contains Free-Phase Liquid Hydrocarbons	Historic Data Time Period
Landfarm 1	A	183A	✓		1990 - 2014
Landfarm 1	A	645A			2003 - 2014
Landfarm 1	A	659A	✓	✓	2001 - 2012
Landfarm 1	A	673A		✓	2003 - 2013
Landfarm 1	A	677A		✓	2003 - 2013
Landfarm 1	C	587C			1994 - 2014
Landfarm 1	C	654C	✓		2000 - 2014
Landfarm 1	C	674C			2003 - 2014
Landfarms 2-5	A	610A	✓		1994 - 2014
Landfarms 2-5	A	657A			2001 - 2014
Landfarms 2-5	A	672A			2003 - 2014
Landfarms 2-5	A	P284A	✓		2003 - 2014
Landfarms 2-5	A	P384A			1993 - 2014
Landfarms 2-5	A	P386A			2003 - 2014
Landfarms 2-5	C	251C	✓		1990 - 2014
Landfarms 2-5	C	506C	✓		1992 - 2014
Landfarms 2-5	C	655C	✓		2000 - 2014
Landfarms 2-5	C	678C	✓		1990 - 2014
Landfarms 2-5	C	679C	✓		1990 - 2014
Landfarms 2-5	C	680C	✓		2000 - 2014

Table 1. Landfarm Area Monitoring Well Network

Sector Name	Zone	Well	Historic Data Time Period
Alkane Sector	A	209A	1994 - 2014
Alkane Sector	A	P460A	1994 - 2014
Alkane Sector	AT	595AT	1994 - 2014
Alkane Sector	C	223C	1994 - 2014
Alkane Sector	C	375C	1991 - 2014
Alkane Sector	C	670C	1990 - 2014
Bayside North	AT	387AT	1991 - 2014
Bayside North	AT	388AT	1991 - 2014
Bayside North	AT	390AT	1991 - 2014
Bayside North	AT	391AT	1991 - 2014
Bayside South	AT	340AT	1991 - 2014
Bayside South	AT	345AT	1992 - 2014
Bayside South	CT	351CT	1992 - 2014
Bayside South	F	337F	1992 - 2014
Castro Sector	A	323A	1993 - 2014
Castro Sector	A	554A	1993 - 2014
Castro Sector	A	556A	1993 - 2015
Castro Sector	A	642A	1997 - 2014
Castro Sector	A	649A	1997 - 2014
Castro Sector	C	106C	1993 - 2014
Castro Sector	C	125C	1993 - 2014
Castro Sector	C	320C	1993 - 2014
Effluent Sector	A	108A	1990 - 2014
Effluent Sector	A	164A	1990 - 2014
Effluent Sector	A	179A	1990 - 2014
Effluent Sector	C	108C	1990 - 2014
Effluent Sector	C	164C	1990 - 2014
Interior C Zone	C	138C	1991 - 2014
Interior C Zone	C	208C	1990 - 2014
Interior C Zone	C	378C	1992 - 2014
Interior C Zone	C	379C	1991 - 2014
Interior C Zone	C	380C	1991 - 2014
Interior C Zone	C	382C	1991 - 2014
Interior C Zone	C	638C	1995 - 2014

Table 2. Refinery-wide Monitoring Well Network (1 of 2)

Sector Name	Zone	Well	Historic Data Time Period
Landfill 15	A	232A	1990 - 2014
Landfill 15	A	233A	1990 - 2014
Landfill 15	A	234A	1990 - 2014
Landfill 15	A	240A	1990 - 2014
Landfill 15	A	551A	1994 - 2014
Landfill 15	A	552A	1994 - 2014
Landfill 15	C	232C	1990 - 2014
Landfill 15	C	234C	1990 - 2014
Landfill 15	C	235C	1990 - 2014
Landfill 15	C	236C	1990 - 2014
North Yard	A	550A	1994 - 2014
North Yard	A	671A	2001 - 2014
North Yard	A	675A	1990 - 2014
North Yard	C	178C	1994 - 2014
North Yard	C	377C	1992 - 2014
Pollard	A	260A	1990 - 2014
Pollard	A	262A	1990 - 2014
Pollard	A	803A	1990 - 2014
Pollard	C	635C	1995 - 2014
Reclamation Sector	A	290A	1990 - 2014
Reclamation Sector	A	369S	1991 - 2014
Reclamation Sector	A	370A	1991 - 2014
Reclamation Sector	A	560A	1993 - 2014
Reclamation Sector	A	564A	1993 - 2014
Reclamation Sector	A	643A	1997 - 2014
Reclamation Sector	C	238C	1990 - 2014
Reclamation Sector	C	569C	1993 - 2014
Reclamation Sector	C	685C	2007 - 2014

Table 2. Refinery-wide Monitoring Well Network (2 of 2)

Statistical Methods	Description	Reference	Software
Mann-Kendall test	The Mann-Kendall test involves computing a statistic S, which is the difference between the number of pairwise slopes that are positive minus the number that are negative. If S is a large positive value, then there is evidence of an increasing trend in the data. If S is a large negative value, then there is evidence of a decreasing trend in the data. The null hypothesis or baseline condition for this test is that there is no temporal trend in the data values, i.e., "H_0: no trend". The alternative condition or hypothesis will usually be either "H_A: upward trend" or "H_A: downward trend."	Gilbert, Richard O. (1987). Statistical Methods for Environmental Pollution Monitoring. Van Nostrand Reinhold, New York. USEPA (2006). Data Quality Assessment: Statistical Methods for Practitioners. EPA QA/G-9S.	Microsoft Excel ProUCL
Control Chart	Combined Shewhart-CUSUM control chart. All sampled data are continually plotted on a Control Chart as they are collected, providing an historical overview of the concentration pattern at the well. When the sample concentration crosses the Shewhart control limit, and/or the cumulative sum of the sample concentrations crosses the CUSUM control limit, the chemical parameter under investigation is declared "out of control."	ASTM (1998). “Standard Guide for Developing Appropriate Statistical Approaches for Ground-Water Detection Monitoring Programs”. ASTM Guide D6312-98. Gibbons, R. D. (1994). Statistical Methods for Groundwater Monitoring. John Wiley & Sons, Inc., New York.	SAS Institute/JMP Microsoft Excel

Table 3. Summary of Proposed Statistical Methods

Appendix P
Non-Applicability of Vadose Zone Monitoring Technical Memorandum
(October 31, 2002)

RB0711449

FILE COPY

October 31, 2002

Environmental Management Company
940 Hensley Street
Richmond, CA 94801

Anthony Maciey
Project Manager
510-242-8102

Ms. Cheri Pedilla
Standardized Permits and Corrective Action Branch
700 Heinz Avenue, Suite 200
Berkeley, CA 94710-2721

Non-Applicability of Article 17, Chapter 14, Section 66264.700 (c) Vadose Zone Monitoring, Landfarm Post Closure Permit, Chevron Richmond Refinery

Dear Ms. Pedilla:

ChevronTexaco has attached the requested memorandum with regards to the Non-Applicability of Article 17, Chapter 14, Section 66264.700 (c) Vadose Zone Monitoring for the inclusion in the Landfarm Post Closure Permit.

If you have any questions or comments regarding this memorandom, please call Mr. John MacLeod (510) 242-2295.

Sincerely,

A J Maciey

Anthony J. Maciey
Project Manager
Chevron Environmental Management Co.

Attachment

bcc: WDO Files

008603

URS
500 12th Street, Suite 200
Oakland, CA 94607-4014
Telephone: (510) 874-3080
Facsimile: (510) 874-3268

MEMORANDUM

To:	**John Macleod – Chevron/Texaco**	**From:**	**George Muehleck, RG**
		Office:	**Oakland**
		Date:	**October 21, 2002**

Subject: Non-Applicability of Article 17, Chapter 14, Section 66264.700(c) Vadose Zone Monitoring – Landfarms Post-Closure Permit Application Chevron Richmond California Refinery

Vadose zone monitoring is not proposed in the Landfarms Post-Closure Permit Application and Landfarms Post-Closure Monitoring Plan as a vadose zone does not exist between waste within the Landfarms and first-encountered groundwater (commonly referred to as the "A" Zone at Chevron's Richmond Refinery). Site-specific first water is typically encountered 2 to 6 feet below land surface with waste extending from approximately 2 feet below finish grade to below first water. As such there is no vadose or unsaturated zone separating Landfarm waste from first water. Accordingly, vadose zone monitoring under Article 17, Chapter 14, Section 66264.700(c) is not applicable to the Landfarm sites.

Furthermore, Chevron has demonstrated that waste will not migrate from the Landfarms through:

- closure with a vegetative cover;
- construction, operation and maintenance of a Groundwater Protection System (GPS) (low permeability barrier walls keyed into the top of the Bay Mud and groundwater extraction trenches and wells) to contain, capture and treat unit-specific "A" Zone groundwater within the confines of the GPS and;
- continued self monitoring and reporting under RWQCB Order No. 00-043 – Groundwater Corrective Action Self Monitoring and Reporting Program.

Signed: _____ 10/21/02
George Muehleck, R.G. Date

REGISTERED GEOLOGIST
GEORGE MUEHLECK
No. 5392
exp 6/03
STATE OF CALIFORNIA

Appendix Q
Post-Closure Care Cost Estimate and Financial Assurance for Closure and Post-Closure Care and Liability Coverage

Chevron Richmond Refinery

Revised Financial Assurance Cost Estimates for Landfarms 1-5 Post Closure Care

Chevron provides the following cost estimates to support the required financial assurance for post-closure care of the landfarms. The post-closure care financial assurance cost estimate prepared for the September 7, 2012 application was evaluated and modified with additional detail and rationale provided.

Chevron received the Department of Toxic Substances Control (DTSC) January 12, 2015 First Notice of Deficiency, which included the November 20, 2014 DTSC memo titled *Review of the Financial Assurance Cost Estimate for the Richmond Refinery Landfarms 1-5*. In the November 20, 2014 memo prepared by the DTSC's Engineering and Special Projects Office, the DTSC requested additional costing details for the refinery post-closure tasks which were included in the September 7, 2012 Part B application. Chevron provided the DTSC a draft compilation of updated scope of work assumptions and costs in an April 2, 2015 memo titled *Draft Financial Assurance Cost Estimates for Landfarms 1-5 Post Closure Care*. The DTSC reviewed the information presented in the April 2, 2015 memo and responded with a memorandum on April 29, 2015 titled *Review of the Revised Financial Assurance Cost Estimate for the Richmond Refinery Landfarms 1-5, Chevron USA, Post Closure Permit, CAD009114919 (Site Code: 200273-33).*

The scope of work and costs for post-closure care of the landfarms have been revised to incorporate the DTSC comments and suggestions. The attached table provides the detail and basis for the cost estimate.

Costs in this estimate have been updated to reflect 2015 dollars.

LANDFARMS 1-5 POST-CLOSURE CARE

The Landfarms post-closure care costs comprise ten tasks with an added contingency factor. Additional detail and basis for the costs are provided in the attached tables and accompanying text.

TASK 1 – GROUNDWATER MONITORING

In the September 2012 application, the cost for groundwater monitoring at the landfarms was estimated as 40% of the annual Refinery Groundwater Monitoring Program (RGMP) costs. The RGMP is defined in Regional Water Quality Control Board Order R2-2011-0036, which may be revised during the period of this permit. Note that groundwater monitoring at the refinery is also discussed in RWQCB Order R2-2012-0015, and that these two orders share the same Self-Monitoring and Reporting Program (SMP). Copies of the Orders and SMP are included elsewhere in this permit application.

The current RGMP costs include:

- Semi-annual groundwater elevation surveys and sample collection;
- Laboratory analysis of groundwater samples and electronic submittal of data;
- Data management and statistical analysis of results;
- Preparation and submittal of two semi-annual monitoring reports.

The DTSC requested that additional detail of the costs be provided, including listing costs for sample analysis, the number of samples to be collected, labor costs to collect samples and supplies. The attached table includes an estimate of labor to perform the annual groundwater monitoring program at the Landfarms, following the SMP. The labor estimate includes sample collection, data evaluation, data management and reporting. The laboratory analytical costs are presented in a five-year sequence, as the monitoring program includes semi-annual, annual, biennial and five year sampling frequencies. The cost of groundwater sample analyses for the five year analytical program is estimated to be $86,996.

The monitoring and operating costs have been drastically reduced over the last ten years through increased efficiency in the systems, practices and procedures, staffing, and equipment, resulting in reductions in materials and personnel time needs.

The estimated costs for Task 1 – Groundwater Monitoring are:

Annual labor cost = $130,140

Laboratory analytical cost (5 year schedule) = $86,996

30-year cost - (30 * $130,140)+($86.996*6)) = $4,426,176

TASK 2 – SURFACE WATER AND SOIL MONITORING

The vegetative cover on the Landfarms is well-established. In the revised post-closure monitoring plan, Chevron has proposed that this monitoring program no longer be performed. No costs for Task 2 – Surface Water and Soil Monitoring are presented.

TASK 3 – POST-EARTHQUAKE INSPECTION AND REPAIR

According to the 2002 negotiated financial assurance estimate included in the original post-closure permit application, costs for post-earthquake monitoring were based on the 1996 Closure Plan Landfarms Post Earthquake Inspection and Corrective Action plan. The assumptions were that three earthquake events occur in the next 30 years that warrant full site inspections. The estimated cost for all three inspections and associated reports was $10,000. Also within the same 30-year period an earthquake of sufficient magnitude would occur that would cause $50,000 damage to the GPS piping or appurtenances and/or soil cover.

The DTSC has recently asked for the lump sum costs to be separated into line item costs for labor and materials. Additionally, the DTSC has requested costs be developed for a major repair of the cap.

Task 3 has been further divided into 3 subtasks:

- Post-Earthquake Inspection and Report
- Post-Earthquake Repair of GPS Trench
- Post-Earthquake Repair of Landfarm Cap

The Post-Earthquake Inspection and Report assumes that three seismic events occur within the next 30 years that require the landfarms be inspected for damage. The costs include labor to perform the inspections and prepare a report to the DTSC.

30-year cost ($11,600*3) = $34,800

Post-Earthquake Repair of the GPS Trench assumes that a 100 foot long section of the GPS extraction trench is damaged once within a 30 year period and requires replacement. For estimating purposes, a trench depth of 15 feet was used. The costs include labor to design the repair, oversight of the contractor and contractor costs for trenching, shoring and placement of piping and base rock fill.

30-year cost = $70,620

The Post-Earthquake Repair of the Landfarm Cap assumes the cap is damaged once within a 30 year period and includes costs to replace approximately 15% of the landfarm cap with soil. The estimated area of repair has been revised to 4.35 acres. The equipment and labor hour estimates were developed through discussions with a general engineering contractor familiar with working at the Richmond Refinery. The contractor assumed that re-grading 4.35 acres of cap can be accomplished within a 40 hour work week using a two-person crew. The costs include labor to design the repair, oversight of the contractor and contractor costs for placement and compaction of the soil cap, and re-seeding of the cap surface.

30-year cost = $68,372

The total estimated cost for Task 3 – Post-Earthquake Inspection and Repair is $173,792.

TASK 4 – GENERAL INSPECTIONS

These costs include the periodic inspections by Chevron operators and maintenance personnel, the annual visual cap inspections by a qualified engineer, annual settlement survey and report preparation.

Approximately 30 hours annually are required by Chevron operators to complete the inspection of the Landfarm caps and surface drainage structures following heavy rainfall. The total annual cost for the post-rain inspection is $2,670.

The annual visual cap inspection and settlement survey requires field time of approximately two hours per landfarm for a project engineer and a senior engineer. Report preparation requires an additional 20 hours for the project engineer and six hours for the senior engineer. The total cost for the annual visual cap inspections and reporting is $5,796.

A licensed surveyor performs the annual settlement survey and prepares a data summary table which is part of the annual inspection report, for the estimated cost of $2,445.

The total estimated cost for Task 4 – General Inspections is:

30-year cost – ($10,911*30) = $327,330

TASK 5 – COVER AND DRAINAGE SYSTEM MAINTENANCE

The on-going maintenance tasks for the cover and drainage system include:

- Annual mowing of vegetative cover (labor and equipment rental costs of $11,640);
- Periodic weed eating as needed ($7,700)
- V-ditch/swale cleaning (labor of $7,700); and
- HPDE V-Ditch repairs (labor and material of $1,866).

Labor costs for landfarm maintenance are $69/hour (Goebel Construction laborer rate) and $8/hour for equipped vehicle costs, parts, material, and equipment costs are estimated based on historical purchases of these supplies.

The DTSC recommended that the financial assurance cost estimate also include costs to re-seed the landfarms surface following a fire. Costs to re-seed the entire 29-acre surface area of the landfarms once during the 30 year period are estimated to be:

Repair following fire = $3,920*29=$113,680

The total estimated costs for Task 5 – Cover and Drainage System Maintenance are:

Annual cost = $11,640 + $7,700 + $7,700 + $1,866 = $28,906

Repair following fire = $113,680

30-year cost = $28,906 * 30 + $113,680 = $980,860

TASK 6 – MONITORING SYSTEM MAINTENANCE

In the 2002 financial assurance estimate, Chevron assumed over the next 30 years that 10 “A” Zone wells at a cost of $5,000 each and 10 “C” Zone wells at a cost of $6,750 each would have to be replaced. The costs for replacement of the wells was adjusted based on updated drilling contractor estimates, and the labor, permit, materials and equipment costs for replacement of the 10 “A” Zone and 10 “C” Zone wells are detailed on the attached spreadsheet.

30-year cost = $208,020

TASK 7 – POST CLOSURE PERMIT RENEWALS AND ANNUAL PERMIT FEE

The estimate of the cost for post-closure permit renewal and annual permit fee is based on the fee summary document available on the DTSC website. The annual waste fee for a large facility in post closure care, after the initial 5 years of post-closure care have passed, is listed as $10,300. The renewal fees for a post closure permit for facilities with a full permit, like the Richmond facility, must pay a fee equal to the fee that would have been assessed had the facility requested the same changes through a permit modification application. The maximum fee that could result would be that for a Class III modification assessed at 80% of a new permit fee. The fee for a post closure facility permit for a large facility is $57,178, and 80% of that is approximately $45,742. Two renewals will be required over the 30-year period.

Consultant fees for each permit renewal were developed and detailed on the attached spreadsheet.

30-year cost = [($10,300*30)+($45,742*2)+($47,380*2) = $495,244

TASK 8 – SECURITY

The financial assurance estimate presented in the 2002 permit application included a one-time fence repair cost of $25,000 over the next 30 years. The fence consists of galvanized steel chain hung from posts set every 10 feet, and surrounds each landfarm. The fence has required little maintenance over the last 15 years. For cost estimating purposes, we assumed a 1000 foot length of chain fence would require replacement over 30 years. Approximately 10,450 linear feet of chain fence surrounds the five landfarms.

30-year costs = $29,750

TASK 9 – OVERHEAD AND MANAGEMENT COSTS

As the landfarms are in post-closure with no active function other than cap maintenance and inspections, overhead and management costs were estimated to be 10% of the total project costs for Tasks 1 through 8 plus Task 10. Overhead and management costs are not specific to Chevron contractor or supplier rates.

30-year cost = ($13,586,420 *0.10) = $1,358,642

TASK 10 – GPS OPERATION

In the financial assurance cost estimate presented in the 2002 permit application, it was assumed the landfarms represent approximately 15% of the total GPS operating costs. Review of the current operation of the GPS indicates that the proportion of water pumped by the system surrounding the Landfarms is 24% of the total, and for financial assurance estimating, this revised proportion of cost is used as a baseline. An estimated breakdown for labor and materials is provided in the attached spreadsheet. Additionally, costs were added to include periodic pump and hose replacement, assuming a 10 year service life for this equipment.

As requested by the DTSC, costs for an independent groundwater treatment system were prepared, based on the assumption that the refinery wastewater treatment system would not be available (assumes the refinery ceases operation in the future) and replaced with a system dedicated to treating only the landfarms GPS-generated wastewater. Because of the absence of piping to convey treated landfarms groundwater to a nearby publicly-owned treatment works (POTW), costs to acquire a surface water discharge permit and perform periodic monitoring of the discharge were also developed and included.

The costs to design, permit and construct the independent groundwater treatment system were estimated at $279,250 with annual operating costs of $129,510.

The total estimated costs for Task 10 – GPS Operation are:

Annual landfarms operating cost = $70,800 * 30 = $2,124,000
Periodic pump and equipment replacement = $656,700
Water treatment plant design, permitting and construction = $279,250
Annual treatment system operation and discharge monitoring = $129,510*30=$2,364,000

30-year costs = $6,945,250

TASK 11 – CONTINGENCY

The Landfarms are in post-closure care with no active land use. Costs for the maintenance and care of the closure units are well known, and a contingency percentage of 10% of the sum of the 30-year estimates is added to create the total 30-year financial assurance estimate.

Contingency = 0.10 * $14,945,064 = $1,494,506

Total Landfarms 1-5 Postclosure Care Cost = $16,439,571

These costs are in 2015 dollars and are based on our understanding of the current level of effort in performance of ongoing maintenance of the landfarms.

Chevron Richmond Refinery
Landfarms 1 - 5 Post Closure Care Costs

Task 1 Groundwater Monitoring
Note - Landfarms Post-Closure groundwater monitoring program is described in Tables 3 and 4 of the RWQCB Order R2-2011-0036.

Item	Post Closure Care Activity	Quantity	Unit	Unit Cost	Cost	30 Year Estimate
1	**Task 1 Groundwater Monitoring**					
	Landfarm groundwater monitoring program average annual sampling and reporting cost. Labor estimate includes sample collection, data management and reporting.	360	Sr. Sampling Technician hours	$89	$32,040	$961,200
		440	Sr. Project manager hours	$110	$48,400	$1,452,000
		180	Chemist hours	$89	$16,020	$480,600
		80	Statistician (URS)	$185	$14,800	$444,000
		80	Sr. Engineer (PE) hours	$201	$16,080	$482,400
		4	Monthly truck rental, misc. equipment rental, consumable supplies	$700	$2,800	$84,000
				Subtotal	*$130,140*	*$3,904,200*
2	Landfarms groundwater monitoring program laboratory analytical costs - 5 year analytical sampling schedule		Laboratory Analysis - 5 Year Cost		$86,996	$521,975.94
	Task 1 Groundwater and Vadose Zone Monitoring Total 30 Year Cost					***$4,426,176***

Chevron Richmond Refinery
Landfarms 1-5 Post-Closure Care Costs

Task 1 - Groundwater Monitoring - Laboratory Sample Analysis
Note - Sample analyses follow a 5 year sequence. Table compiles sample analytical costs for years 1-5.

Analysis Description	Count	Price	Net	Total
First Year Analytical Cost Estimate				
10g Silica Gel Column Cleanup	35	$43.50	$1,522.50	
TPH-DRO water C10-C28 w/Si Gel	35	$37.56	$1,314.60	
TPH-DRO water C10-C28	35	$37.56	$1,314.60	
TPH-GRO water C6-C10	41	$26.24	$1,075.84	
1-2 Metals in Water (ICP)	11	$19.44	$213.84	
7-12 Metals Water (ICP)	20	$61.15	$1,223.00	
Arsenic	29	$13.98	$405.42	
Lead	29	$13.98	$405.42	
Mercury	20	$11.79	$235.80	
Nickel	32	$13.98	$447.36	
Selenium	20	$13.98	$279.60	
8260: Benzene, Toluene, MTBE	13	$36.71	$477.23	
VOCs- 5 ml Water by 8260B	27	$90.91	$2,454.57	
Dissolved Sulfide	22	$22.75	$500.50	
PAH's 8270C Water	9	$78.62	$707.58	
Semi-volatiles	20	$180.18	$3,603.60	
Skinner List in Water by 8270C	20	$180.18	$3,603.60	$19,785.06
20% added for additional QC samples and Resamples				$3,957.01
First Year Analytical Cost Total Estimate				$23,742.07
Second Year Analytical Cost Estimate				
10g Silica Gel Column Cleanup	35	$43.50	$1,522.50	
TPH-DRO water C10-C28 w/Si Gel	35	$37.56	$1,314.60	
TPH-DRO water C10-C28	35	$37.56	$1,314.60	
TPH-GRO water C6-C10	44	$26.24	$1,154.56	
1-2 Individual Metals (ICP)	29	$19.44	$563.76	
3-6 Metals in Water (ICP)	2	$43.20	$86.40	
Arsenic	29	$13.98	$405.42	
Lead	29	$13.98	$405.42	
Nickel	32	$13.98	$447.36	
8260 Ext. Water Master /GRO	2	$36.71	$73.42	
8260: Benzene, Toluene, MTBE	24	$36.71	$881.04	
VOCs- 5 ml Water by 8260B	16	$90.91	$1,454.56	
Dissolved Sulfide	4	$22.75	$91.00	
PAH's 8270C Water	18	$78.62	$1,415.16	$11,129.80
20% added for additional QC samples and Resamples				$2,225.96
Second Year Analytical Cost Total Estimate				$13,355.76
Third Year Analytical Cost Estimate				
10g Silica Gel Column Cleanup	35	$43.50	$1,522.50	
TPH-DRO water C10-C28 w/Si Gel	35	$37.56	$1,314.60	
TPH-DRO water C10-C28	35	$37.56	$1,314.60	
TPH-GRO water C6-C10	42	$26.24	$1,102.08	
1-2 Individual Metals (ICP)	20	$19.44	$388.80	
3-6 Metals in Water (ICP)	2	$43.20	$86.40	
7-12 Metals Water (ICP)	9	$61.15	$550.35	
Arsenic	29	$13.98	$405.42	
Lead	29	$13.98	$405.42	
Mercury	9	$11.79	$106.11	
Nickel	32	$13.98	$447.36	
Selenium	9	$13.98	$125.82	
8260 Ext. Water Master /GRO	2	$36.71	$73.42	

Task 1 - Groundwater Monitoring - Laboratory Sample Analysis (continued)

8260: Benzene, Toluene, MTBE	13	$36.71	$477.23	
VOCs- 5 ml Water by 8260B	27	$90.91	$2,454.57	
Dissolved Sulfide	22	$22.75	$500.50	
PAH's 8270C Water	9	$78.62	$707.58	
Semi-volatiles	9	$180.18	$1,621.62	
Skinner List in Water by 8270C	9	$180.18	$1,621.62	$15,226.00
20% added for additional QC samples and Resamples				$3,045.20
Third Year Analytical Cost Total Estimate				$18,271.20
Fourth Year Analytical Cost Estimate				
10g Silica Gel Column Cleanup	35	$43.50	$1,522.50	
TPH-DRO water C10-C28 w/Si Gel	35	$37.56	$1,314.60	
TPH-DRO water C10-C28	35	$37.56	$1,314.60	
TPH-GRO water C6-C10	12	$26.24	$314.88	
TPH-GRO water C6-C10	32	$26.24	$839.68	
1-2 Individual Metals (ICP)	29	$19.44	$563.76	
3-6 Metals in Water (ICP)	2	$43.20	$86.40	
Arsenic	29	$13.98	$405.42	
Lead	29	$13.98	$405.42	
Nickel	32	$13.98	$447.36	
8260 Ext. Water Master /GRO	2	$36.71	$73.42	
8260: Benzene, Toluene, MTBE	24	$36.71	$881.04	
VOCs- 5 ml Water by 8260B	16	$90.91	$1,454.56	
Dissolved Sulfide	4	$22.75	$91.00	
PAH's 8270C Water	18	$78.62	$1,415.16	$11,129.80
20% added for additional QC samples and Resamples				$2,225.96
Fourth Year Analytical Cost Total Estimate				$13,355.76
Fifth Year Analytical Cost Estimate				
10g Silica Gel Column Cleanup	35	$43.50	$1,522.50	
TPH-DRO water C10-C28 w/Si Gel	35	$37.56	$1,314.60	
TPH-DRO water C10-C28	35	$37.56	$1,314.60	
TPH-GRO water C6-C10	42	$26.24	$1,102.08	
1-2 Individual Metals (ICP)	20	$19.44	$388.80	
3-6 Metals in Water (ICP)	2	$43.20	$86.40	
7-12 Metals Water (ICP)	9	$61.15	$550.35	
Arsenic	29	$13.98	$405.42	
Lead	29	$13.98	$405.42	
Mercury	9	$11.79	$106.11	
Nickel	32	$13.98	$447.36	
Selenium	9	$13.98	$125.82	
8260 Ext. Water Master /GRO	2	$36.71	$73.42	
8260: Benzene, Toluene, MTBE	13	$36.71	$477.23	
VOCs- 5 ml Water by 8260B	27	$90.91	$2,454.57	
Dissolved Sulfide	22	$22.75	$500.50	
PAH's 8270C Water	9	$78.62	$707.58	
Semi-volatiles	9	$180.18	$1,621.62	
Skinner List in Water by 8270C	9	$180.18	$1,621.62	$15,226.00
20% added for additional QC samples and Resamples				$3,045.20
Fifth Year Analytical Cost Total Estimate				$18,271.20
Sum of Five Year Analytical Costs				$86,995.99
30 Year Analytical Cost Estimate (5Year cost * 6)				$521,975.95

Chevron Richmond Refinery
Landfarms 1 - 5 Post Closure Care Costs

Task 2 - Surface Water and Soil Monitoring

Item	Post Closure Care Activity	Quantity	Units	Unit Cost	Annual Cost	30 Year Estimate
1	**Irrigation Water Sampling**					
	This Item was originally included because water was supplied from partially-treated refinery effluent. Now water is supplied from the East Bay Municipal Utilities District and does not need sampling.	0	ea	$0	$0	$0
2	**Soil Samples**					
	Previous Post Closure Care Financial Assurance Documents called for 58 samples. Based on Apple Labs 2012 costs, the sample analysis is $12 per sample	0	ea	$12	$0	
	Labor					
	Based on 2012 labor cost the labor to collect the 58 samples is $1,500.00	0	ea	$1,500	$0	
				Cost per Event	$0	
	Annual Sampling and Analysis Cost					
	Previous Post Closure Care Financial Assurance Documents call for semi-annual sampling	2	ea	$0	$0	$0
	Task 2 - Surface Water and Soil Monitoring Total Annual Cost				**$0**	
	Task 2 - Surface Water and Soil Monitoring Total 30 Year Cost					***$0***

Chevron Richmond Refinery
Landfarms 1 - 5 Post Closure Care Costs

Task 3 - Post-Earthquake Inspection and Repair

Item	Post Closure Care Activity	Quantity	Units	Unit Cost	Cost	30 Year Estimate
1	**Post-Earthquake Inspection and Report**					
	Assumes three earthquake events over 30 years that warrant full site inspection and follow-up reports. Estimate is based on Section N2.0 of Closure Plan; Potentially Impacted Facilities, of Landfarms Post Earthquake Inspection and Corrective Action.	40	Sr. Technician hours	$89	$3,560	$10,680
		40	Project Engineer (PE) hours	$201	$8,040	$24,120
				Subtotal	*$11,600*	*$34,800*
2	**Post-Earthquake Repair of GPS Trench**					
	Assumes one earthquake event in 30 years that damages 100 linear feet of GPS piping and appurtenances (assume 15 foot deep trench on average). Costs include engineering design, oversight of construction, contractor labor and reporting.	120	Sr. Technician hours	$89	$10,680	$10,680
		80	Project Engineer (PE) hours	$201	$16,080	$16,080
		70	Equipment Operator hours	$121	$8,470	$8,470
		70	Construction laborer hours	$77	$5,390	$5,390
		1500	Temporary shoring (sq ft)	$10	$15,000	$15,000
		100	Materials (per linear foot)	$150	$15,000	$15,000
				Subtotal	*$70,620*	*$70,620*
3	**Post-Earthquake Repair of Landfarm Cap**					
	Assumes one earthquake event in 30 years that damages 4.35 acres of landfarm cap (15% of total landfarms surface, compacted soil vegetative cap). Costs include engineering design, oversight of construction, contractor labor, equipment, materials and reporting.	80	Sr. Technician hours	$89	$7,120	$7,120
		100	Project Engineer (PE) hours	$201	$20,100	$20,100
		50	Equipment Operator hours	$121	$6,050	$6,050
		150	Construction Laborer hours	$77	$11,550	$11,550
		50	Grading Equipment (D6 dozer)	$105	$5,250	$5,250
		50	Grading Equipment (skiploader)	$25	$1,250	$1,250
		4.35	Re-seeding of cap (per acre)	$3,920.0	$17,052	$17,052
				Subtotal	*$68,372*	*$68,372*

Task 3 - Post-Earthquake Inspection and Repair Total 30 Year Cost **$173,792**

Chevron Richmond Refinery
Landfarms 1 - 5 Post Closure Care Costs

Task 4 - General Inspections

Item	Post Closure Care Activity	Quantity	Units	Unit Cost	Annual Cost	30 Year Estimate
1	**Inspections**					
	Cap and Drainage System Inspections					
	Visual inspection of the five landfarm caps and drainage system following heavy rainfall events	30	Sr. Field Technician hours	$89	$2,670	$80,100
	Annual Visual Cap Inspection and Reporting					
	Annual inspections of the caps by qualified engineer and preparation of the Annual Inspection and Settlement Survey Report	30	Staff Engineer hours	$86	$2,580	$77,400
		16	Project Engineer (California PE) hours	$201	$3,216	$96,480
2	Annual Settlement Survey					
	Annual settlement survey (measure elevations of fixed markers) at the five landfarms	12	Licensed Surveyor hours	$204	$2,445	$73,350
	Task 4 - General Inspections Total Annual Cost				**$10,911**	
	Task 4 - General Inspections Total 30 Year Cost					***$327,330***

Chevron Richmond Refinery
Landfarms 1 - 5 Post Closure Care Costs

Task 5 - Cover and Drainage System Maintenance

Item	Post Closure Care Activity	Quantity	Units	Unit Cost	Annual Cost	30 Year Estimate
1	**Annual Mowing**					
	Equipment Rental					
	Assumes rental of mower for 3 weeks	3	mower rental	$800	$2,400	$72,000
	Labor					
	Landscape contractor	120	hr	$77	$9,240	$277,200
				Subtotal	*$11,640*	*$349,200*
2	**Weed Eating**					
	Labor					
	Landscape contractor	100	hr	$77	$7,700	$231,000
3	**Major Repair Following Fire (assume 1 event)**					
	Assume re-seeding of all Landfarms 1-5 cap surface needed once over the next 30 years.					
	Hydroseeding					
	Landscaping contractor to hydroseed cap	29	Acre	$3,920	$113,680	$113,680
				Subtotal	*$113,680*	*$113,680*
4	**V-Ditch Swale Cleaning**					
	Labor					
	Goebel labor	100	hr	$77	$7,700	$231,000
5	**HPDE V-Ditch Repairs**					
	Labor					
	Goebel labor	8	hr	$77	$616	$18,480
	Materials					
	Estimate based on previous operating experience (hot HDPE patch equipment).	1	lump sum	$1,250	$1,250	$37,500
				Subtotal	*$1,866*	*$55,980*

Task 5 - Cover and Drainage System Maintenance Total 30 Year Cost ***$980,860***

Chevron Richmond Refinery
Landfarms 1 - 5 Post Closure Care Costs

Task 6 - Monitoring System Maintenance

Item	Post Closure Care Activity	Quantity	Units	Unit Cost	Cost	30 Year Estimate
1	**Well Replacement**					
	"A" Zone Wells					
	Assume that 10 "A" Zone wells (15 feet deep) will be replaced over 30 years. Labor estimate includes permitting, oversight of drilling and report preparation. Permit cost includes abandonment of original well and installation of replacement well.	80	Staff Geologist Hours	$105	$8,400	$8,400
		40	Senior Geologist hours	$139	$5,560	$5,560
		Drilling Subcontractor				
		60	Driller hours	$125	$7,500	$7,500
		60	Helper	$85	$5,100	$5,100
		60	Drill Rig	$350	$21,000	$21,000
		150	Materials	$14	$2,100	$2,100
		20	Permit	$650	$13,000	$13,000
				Subtotal	*$62,660*	*$62,660*
	"C" Zone Wells					
	Assume that 10 "C" Zone wells (45 feet deep) will be replaced over 30 years. Labor estimate includes permitting, oversight of drilling and report preparation. Permit cost includes abandonment of original well and installation of replacement well.	200	Staff Geologist Hours	$105	$21,000	$21,000
		40	Senior Geologist hours	$139	$5,560	$5,560
		Drilling Subcontractor				
		160	Driller hours	$125	$20,000	$20,000
		160	Helper	$85	$13,600	$13,600
		160	Drill Rig	$350	$56,000	$56,000
		450	Materials	$36	$16,200	$16,200
		20	Permit	$650	$13,000	$13,000
				Subtotal	*$145,360*	*$145,360*
	Task 6 - Monitoring System Maintenance Total 30 Year cost					**$208,020**

Chevron Richmond Refinery
Landfarms 1 - 5 Post Closure Care Costs

Task 7 - Postclosure Permit Renewal and Annual Permit Fee

Item	Post Closure Care Activity	Quantity	Units	Unit Cost	Cost	30 Year Estimate
1	Fees					
	Annual Fee Based on DTSC Fee Summary, effective Jan. 1, 2013, post closure facility fees for years beyond first 5 years of post closure period.	1	ea	$10,300	$10,300	$309,000
	Permit Renewal Fee Based on DTSC Fee Summary, effective Jan. 1, 2013 for renewal of post closure permit, assume worst case scenario of 80% of new permit fee (0.8 * $57,178).	2	ea	$45,742	$45,742	$91,484
	Consultant Fee Assumes outside consultant will be used for preparation of applications, and two renewals expected over a 30 year period.	200	Staff Scientist hours	$89	$17,800	$35,600
		30	Graphics/GIS	$110	$3,300	$6,600
		80	Permit Writer hours	$210	$16,800	$33,600
		40	Senior Engineer (PE) hours	$237	$9,480	$18,960
					$47,380	$94,760
	Task 7 - Postclosure Permit Renewal and Annual Permit Fee Total 30 Year Cost					**$495,244**

Chevron Richmond Refinery
Landfarms 1 - 5 Post Closure Care Costs

Task 8 - Security

Item	Post Closure Care Activity	Quantity	Units	Unit Cost	Cost	30 Year Estimate
1	**Fence**					
	Replace Fence Assumes replacement of 1000 linear feet of fence (1000 feet of 1/4 inch galvanized chain, 100 2-inch galvanized steel posts, 10 signs). Approximately 10,450 linear feet of chain surround the five landfarms.	1000	lin. Ft.	$29.75	$29,750	$29,750
				Task 8 - Security Total 30 Year Cost		**$29,750**

Chevron Richmond Refinery
Landfarms 1 - 5 Post Closure Care Costs

Task 9 - Overhead and Management Costs

Item	Post Closure Care Activity	Quantity	Units	Unit Cost	Cost	30 Year Estimate
1	**Management Cost**					
	Oversight Assumes management and overhead cost equivalent to 10% of total program cost.					
		10%	Fee Percentage of Total	$1,356,642		$1,356,642
	Task 9 - Overhead and Management Costs Total 30 Year Cost					**$1,356,642**

Chevron Richmond Refinery
Landfarms 1 - 5 Post Closure Care Costs

Task 10 - GPS

Item	Post Closure Care Activity	Quantity	Units	Unit Cost	Cost	30 Year Estimate
1	**Groundwater Protection System**					
	Landfarm Operating Cost					
	Estimate of annual labor and periodic equipment replacement for operation of the GPS surrounding the landfarms. The Landfarms account for 24% of the total volume of groundwater extracted at the refinery, and the annual labor and materials costs were factored accordingly.	250	Sr. Field Technician hours	$89	$22,250	$667,500
		500	Pump Technician hours	$77	$38,500	$1,155,000
		50	Project Engineer (PE) hours	$201	$10,050	$301,500
				Subtotal	***$70,800***	***$2,124,000***
		46	Pneumatic pump replacement (assume 10 year service life), unit cost is per pump	$2,950	$135,700	$407,100
		1	Miscellaneous GPS controller parts replacement (annual costs)	$7,400	$7,400	$222,000
		46	Hose replacement (assume 10 year service life, 0.25 inch, 0.75 inch, 1.25 inch hose, 25 feet of each at each sump, $8/lin ft for jacketed hose)	$200	$9,200	$27,600
				Subtotal		***$656,700***
	Water Treatment Plant					
	Assumes a stand-alone wastewater treatment facility will be required in the future. Cost includes design, permitting and construction. Assumes average flow rate of 40 gpm, treatment via GAC, discharge to surface water via NPDES permit. Permitting costs include system construction and NPDES discharge permit.	30	Project Engineer (PE) hours	$201	$6,030	$6,030
		120	Staff Engineer hours	$96	$11,520	$11,520
		200	Project Manager hours	$89	$17,800	$17,800
				Subtotal	***$35,350***	***$35,350***
		1	Construction of treatment compound (35x50 feet slab)	$75,000	$75,000	$75,000
		2	Air compressor	$15,000	$30,000	$30,000
		8	2000 pound carbon vessels	$8,000	$64,000	$64,000
		1	Groundwater surge tank	$1,000	$1,000	$1,000
		4	Transfer pump	$1,000	$4,000	$4,000
		16	Filter vessels	$1,500	$24,000	$24,000
		1	Permitting	$45,000	$45,000	$45,000
		1	Sump pump	$900	$900	$900
				Subtotal	***$243,900***	***$243,900***
	Treatment System O&M					
	Annual O&M estimated costs to operate the independent wastewater treatment facility, including utility fees. Assume 30 years. Assume discharge to surface water under NPDES permit with sampling and quarterly reporting.	40	Project Engineer (PE) hours	$201	$8,040	$241,200
		120	Staff Engineer hours	$96	$11,520	$345,600
		260	Sr. Technician hours	$89	$23,140	$694,200
		90	Project Manager hours	$89	$8,010	$240,300
				Subtotal	***$50,710***	***$1,521,300***
		8	2000 pound carbon vessel change-out (assume carbon $3 per pound)	$6,000	$48,000	$1,440,000
		12	Electricity (to power compressors-monthly)	$1,650	$19,800	$594,000
		1	Annual NPDES permit fee	$5,000	$5,000	$150,000
		1	Discharge Sample Analysis (variable frequency, annual cost)	$6,000	$6,000	$180,000
				Subtotal	***$78,800***	***$2,364,000***
				Task 10 - GPS Total 30 Year Cost		**$6,945,250**

SUMMARY - 10% CONTINGENCY CALCULATION

TASK	DESCRIPTION	30-YEAR COST
1	Groundwater Monitoring	$4,426,176
2	Soil Monitoring	$0
3	Post-Earthquake Inspection and Repair	$173,792
4	General Inspections	$327,330
5	Cover & Drainage System Maintenance	$980,860
6	Monitoring System Maintenance	$208,020
7	Postclosure Permit Renewals & Annual Fees	$495,244
8	Security	$29,750
9	Overhead and Management Costs	$1,358,642
10	GPS	$6,945,250
		$14,945,064
11	10% Contingency	$1,494,506
	TOTAL	$16,439,571

Linda Huang
Financial Assurance Specialist

Chevron Environmental Management Company
6101 Bollinger Canyon Road
San Ramon, CA 94583
Tel 925-790-3321
ldef@chevron.com

March 26, 2015

Department of Toxic Substances Control
Financial Responsibility Unit
8800 Cal Center Drive, 3rd Floor
Sacramento, CA 95826-3200

Hazardous Waste Sites - California
Financial Assurance for Closure and Post-Closure Care and Liability Coverage

Dear Financial Responsibility Unit Representative:

Attached, as required by California regulations, are the following Chevron Corporation items:

1. Financial Test Letter dated March 26, 2015.
2. Corporate Guarantee for Closure and Post-Closure Care.
3. Corporate Guarantee for Liability Coverage.
4. 2014 Chevron Form 10-K containing our Report of Independent Registered Public Accounting Firm.
5. Accountant's Special Report.
6. Bond Rating Information.

Where applicable, the inflation factor of 1.4% was applied as of February, 2015.

This document provides financial assurance for the following facilities:

CAT 080010283
Chevron U.S.A. Inc.
Westside Disposal Facility (aka EPC Westside)
26244 Highway 33
Fellows, CA 93324

CAD 043237486
Chevron U.S.A. Inc.
940 Hensley Street
Richmond, CA 94804

CAD 008336901
Chevron U.S.A. Inc
El Segundo Refinery
P.O. Box 97
El Segundo, CA 90245

CAD 009114919
Chevron U.S.A. Inc.
Richmond Refinery
P.O. Box 1272
Richmond, CA 94802

DTSC Calsites Database 44280006
Chevron Environmental Management Company
Calspray Site
135 Walker Street
Watsonville, CA 95076

Chevron Corporation has no TTUs. It does have one FTU:

CAD 043237486
Chevron U.S.A. Inc.
940 Hensley Street
Richmond, CA 94804

If you have any questions please call me at the number above.

Sincerely,

Linda Huang

Enclosures

cc: Gareth Feldstein
Martin Swinderman
Brad Rogers
John Amato
Lisa Duncan
Richard Sylvia
Michael Steinbrecher

Patricia E. Yarrington
Vice President and
Chief Financial Officer

Chevron Corporation
6001 Bollinger Canyon Road
San Ramon, CA 94583-2324
Tel (925) 842-3232
Fax (925) 842-6047

March 26, 2015

Department of Toxic Substances Control
Financial Responsibility Unit
8800 Cal Center Drive
Sacramento, CA 95826-3200

Re: Chevron U.S.A. Inc. – California Sites

Dear Financial Responsibility Unit Representative:

I am the Chief Financial Officer of Chevron Corporation, 6001 Bollinger Canyon Road, San Ramon, California. This letter is in support of this firm's use of the financial test to demonstrate financial responsibility for liability coverage and closure and/or postclosure care, as specified in California Code of Regulations, title 22, division 4.5, chapter 14 and 15, article 8.

The firm identified above is the owner or operator of the following facility(ies)/TTU(s) for which liability coverage for both sudden and nonsudden accidental occurrences is being demonstrated through the financial test specified in California Code of Regulations, title 22, division 4.5, chapter 14 and 15, article 8, sections 66264.147 and 66265.147: None.

The firm identified above guarantees, through the guarantee specified in California Code of Regulations, title 22, division 4.5, chapter 14 and 15, article 8, sections 66264.147 and 66265.147, liability coverage for both sudden or nonsudden accidental occurrences at the following facility(ies)/TTU(s) owned or operated by the following: See Attachment B.

The firm above is the direct or higher tier parent corporation of the owner or operator.

1. The firm identified above is the owner or operator of the following facilities/TTUs for which financial assurance for closure and/or postclosure or liability coverage is demonstrated through the financial test as specified in California Code of Regulations, title 22, division 4.5, chapter 14 and 15, article 8 section 66264.143, subsection (f), section 66264.145, subsection (f), section 66265.143, subsection (e), and section 66265.145, subsection (e). None. The current closure and/or postclosure cost estimates covered by the test are shown for each facility/TTU: N/A.

2. The firm identified above guarantees, through the guarantee as specified in California Code of Regulations, title 22, division 4.5, chapter 14 and 15, article 8, section 66264.143, subsection (f), section 66264.145, subsection (f), section 66265.143, subsection (e), and section 66265.145, subsection (e), the closure and/or postclosure care or liability coverage of the following facilities/TTUs owned or operated by the guaranteed party. See Attachments A and B. The current cost estimates for the closure or postclosure care so guaranteed are shown for each facility/TTU: See Attachment A.

3. In States where the U.S. Environmental Protection Agency is not administering the financial requirements of subpart H of 40 CFR parts 264 and 265, this firm as owner or operator or guarantor is demonstrating financial assurance for the closure or postclosure care of the following facilities/TTUs through the use of a test equivalent or substantially equivalent to the financial test specified in the California Code of Regulations, title 22, division 4.5, chapter 14 and 15, article 8, section 66264.143, subsection (f), section 66264.145, subsection (f), section 66265.143, subsection (e), and section 66265.145, subsection (e). See Attachment A. The current closure and/or postclosure cost estimates covered by such a test are shown for each facility/TTUs: See Attachment A.

4. The firm identified above is the owner or operator of the following facilities/TTUs for which financial assurance for closure or, if a disposal facility, postclosure care, is not demonstrated either to U.S. Environmental Protection Agency or a State through the financial test or any other financial assurance mechanism specified in subpart H of 40 CFR parts 264 and 265, California Code of Regulations, title 22, division 4.5, chapter 14 or 15, article 8 or equivalent or substantially equivalent State mechanisms. None. The current closure and/or postclosure cost estimates not covered by such financial assurance are shown for each facility/TTU: N/A.

5. The firm is the owner or operator or guarantor of the following Underground Injection Control facilities for which financial assurance for plugging and abandonment is required under 40 CFR part 144 and is assured through a financial test. See Attachment C. The current closure cost estimates are required by 40 CFR 144.62 are shown for each facility: See Attachment C.

This firm is required to file a Form 10K with the Securities and Exchange Commission (SEC) for the latest fiscal year.

The fiscal year of this firm ends on December 31. The figures for the following items marked with an asterisk are derived from this firm's independently audited, year-end financial statements for the latest completed fiscal year, ended December 31, 2014.

This firm is using Alternative II for Part B.

ALTERNATIVE II

1.	Sum of current closure and postclosure cost estimates	$ 412,888,903
2.	Amount of annual aggregate liability coverage to be demonstrated	$ 118,000,000
3.	Sum of lines 1 and 2	$ 530,888,903
4.	Current bond rating of most recent issuance and name of rating service:	Aa1 Moody's Investor Services AA Standard and Poor's
5.	Date of issuance of bond	$6 billion issued on March 3, 2015

6.	Date of maturity of bond	$0.90 billion due February 22, 2017 $2.30 billion due March 2, 2018 $1.75 billion due March 3, 2020 $1.05 billion due March 3, 2022
7.	Tangible net worth*	$ 151,498,000,000
8.	Total assets in the U.S.*	$ 79,014,000,000
9.	Is line 7 at least $10 million?	Yes
10.	Is line 7 at least 6 times line 3?	Yes
11.	Are at least 90 percent of the firm's assets located in the United States? If not, complete line 12.*	No
12.	Is line 8 at least 6 times line 3?	Yes

I hereby certify that the wording of this letter is identical to the wording as specified in California Code of Regulations, title 22, section 66264.151, subsection (g) and is being executed in accordance with the requirements of California Code of Regulations, title 22, division 4.5, chapter 14 and 15, article 8.

March 26, 2015

CHEVRON CORPORATION

Patricia E. Yarrington

Patricia E. Yarrington
Vice President and Chief Financial Officer

CORPORATE GUARANTEE FOR CLOSURE OR POSTCLOSURE CARE

Guarantee made this 26th day of March, 2015, by CHEVRON CORPORATION, a business corporation organized under the laws of the State of Delaware, herein referred to as guarantor, to the Department of Toxic Substances Control (DTSC), obligees, on behalf of our subsidiaries Chevron U.S.A. Inc. of 6001 Bollinger Canyon Road, San Ramon, California of 6001 Bollinger Canyon Road, San Ramon, California.

This guarantee is made on behalf of the Chevron U.S.A. Inc., which is our subsidiary of Chevron Corporation, to the DTSC.

RECITALS

1. Guarantor meets or exceeds the financial test criteria and agrees to comply with the reporting requirements for guarantors as specified in California Code of Regulations, title 22, division 4.5, chapter 14 and 15, article 8, section 66264.143, subsection (f), section 66264.145, subsection (f), section 66265.143, subsection (e), and section 66265.145, subsection (e).

2. Chevron U.S.A. Inc. owns at least 50 percent of the voting stock of and/or operates the following hazardous waste management facility(ies)/transportable treatment unit(s) (TTU) covered by this guarantee:

Chevron U.S.A. Inc.

CAD008336901 Chevron U.S.A. Inc. El Segundo Refinery P.O. Box 97 El Segundo, CA 90245	Closure Post-Closure	$ $	3,058,206 11,367,549
CAT080010283 Chevron U.S.A. Inc. Westside Disposal Facility (aka EPC Westside) 26244 Highway 33 Fellows, CA 93324	Post-Closure	$	1,259,688
CAD009114919 Chevron U.S.A. Inc. Richmond Refinery P.O. Box 1272 Richmond, CA 94802	Closure Post-Closure	$ $	1,476,201 19,122,004
CAD043237486 Chevron U.S.A. Inc. 940 Hensley Street Richmond, CA 94804	Closure Post-Closure	$ $	87,086,313 19,340,509

Chevron Chemical Company (a division of Chevron U.S.A. Inc.)

Docket #HSA97/98—005 Calspray Site 135 Walker Street Watsonville, CA 95076	Work	$	656,214

3. "Closure plans" and "postclosure plans" as used below refer to the plans maintained as required by California Code of Regulations, title 22, division 4.5, chapters 14 and 15, article 7, for the closure and postclosure care of facilities/TTU(s) as identified above.

4. For value received from Chevron U.S.A. Inc., guarantor guarantees to DTSC that in the event that Chevron U.S.A. Inc. fails to perform closure and postclosure care of the above facility(ies)/TTU(s) in accordance with the closure or postclosure plans and other permit or interim status requirements whenever required to do so, the guarantor shall do so or establish a trust fund as specified in California Code of Regulations, title 22, division 4.5, chapter 14 and 15, article 8, as applicable, in the name of Chevron U.S.A. Inc. in the amount of the current closure or postclosure cost estimates as specified in California Code of Regulations, title 22, division 4.5, chapter 14 and 15, article 8.

5. Guarantor agrees that if, at any time during or at the end of any fiscal year before the termination of this guarantee, the guarantor fails to meet the financial test criteria, guarantor shall send within 90 days, by certified mail, notice to DTSC and to Chevron U.S.A. Inc. that he or she intends to provide alternate financial assurance as specified in California Code of Regulations, title 22, division 4.5, chapter 14 and 15, article 8 as applicable, in the name of Chevron U.S.A. Inc. Within 120 days after the end of such fiscal year or other occurrence, the guarantor shall establish such alternate financial assurance unless Chevron U.S.A. Inc. has done so.

6. The guarantor agrees to notify DTSC by certified mail of a voluntary or involuntary proceeding under Title 11 (Bankruptcy), United States Code, naming guarantor as debtor within ten (10) days after commencement of the proceeding.

7. Guarantor agrees that within 30 days after being notified by DTSC of a determination that guarantor no longer meets the financial test criteria or that he or she is disallowed from continuing as a guarantor of closure or postclosure care, he or she shall establish alternate financial assurance as specified in California Code of Regulations, title 22, division 4.5, chapter 14 and 15, article 8, as applicable, in the name of Chevron U.S.A. Inc. unless Chevron U.S.A. Inc. has done so.

8. Guarantor agrees to remain bound under this guarantee notwithstanding any or all of the following: amendment or modification of the closure or postclosure plan, amendment or modification of the permit, the extension or reduction of the time of performance of closure or postclosure, or any other modification or alteration of an obligation of the owner or operator pursuant to California Code of Regulations, title 22, division 4.5.

9. Guarantor agrees to remain bound under this guarantee for as long as Chevron U.S.A. Inc. shall comply with the applicable financial assurance requirements of California Code of Regulations, title 22, division 4.5 for the above listed facilities/TTUs, except as provided in paragraph 10 of this agreement.

10. Guarantor may terminate this guarantee by sending notice by certified mail to DTSC and to Chevron U.S.A. Inc., provided that this guarantee may not be terminated unless and until Chevron U.S.A. Inc.

obtains, and DTSC approve(s), alternate closure and/or postclosure care coverage complying with California Code of Regulations, title 22, division 4.5, chapter 14 and 15, article 8.

11. Guarantor agrees that if Chevron U.S.A. Inc. fails to provide alternate financial assurance as specified in California Code of Regulations, title 22, division 4.5, chapter 14 and 15, article 8, as applicable, and obtain written approval of such assurance from DTSC within 90 days after a notice of cancellation by the guarantor is received by DTSC from guarantor, guarantor shall provide such alternate financial assurance in the name of Chevron U.S.A. Inc.

12. Guarantor expressly waives notice of acceptance of this guarantee by DTSC or by Chevron U.S.A. Inc. Guarantor also expressly waives notice of amendments or modifications of the closure and/or postclosure plan and of amendments or modifications of the facility/TTU permit(s).

The parties hereby certify that the wording of this guarantee is identical to the wording specified in California Code of Regulations, title 22, section 66264.151, subsection (h)(1) and is being executed in accordance with the requirements of California Code of Regulations, title 22, division 4.5, chapter 14 and 15, article 8.

Effective date: March 26, 2015

CHEVRON CORPORATION

By Patricia E. Yarrington

Patricia E. Yarrington
Vice President and Chief Financial Officer

By

Assistant Secretary

GUARANTEE FOR LIABILITY COVERAGE

Guarantee made this 26th day of March, 2015, by CHEVRON CORPORATION, a business corporation organized under the laws of the State of Delaware, herein referred to as guarantor. This guarantee is made on behalf of Chevron U.S.A. Inc. of 6001 Bollinger Canyon Road, San Ramon, California which is our subsidiary, to any and all third parties who have sustained or may sustain bodily injury or property damage caused by sudden and/or nonsudden accidental occurrences arising from operation of the facility(ies)/transportable treatment unit(s) (TTU) covered by this guarantee.

This guarantee is made on behalf of the Union Oil Company of California, which is our subsidiary of Chevron Corporation, to the DTSC.

Recitals

1. Guarantor meets or exceeds the financial test criteria and agrees to comply with the reporting requirements for guarantors as specified in California Code of Regulations, title 22, division 4.5, chapter 14 and 15, article 8, sections 66264.147 and 66265.147.

2. Chevron U.S.A. Inc. owns or operates the following hazardous waste management facility(ies)/TTU(s) covered by this guarantee:

Facility	Liability Coverage (Per Occur./Annual Aggregate)
CAD 008336901 Chevron U.S.A. Inc. El Segundo Refinery P.O. Box 97 El Segundo, CA 90245	Sudden Occurrences - $1 million/$2 million Non-sudden Occurrences - $3 million/$6 million
CAD 009114919 Chevron U.S.A. Inc. Richmond Refinery P.O. Box 1272 Richmond, CA 94802	Sudden Occurrences - $1 million/$2 million Non-sudden Occurrences - $3 million/$6 million
CAD 043237486 Chevron U.S.A. Inc. 940 Hensley Street Richmond, CA 94804	Sudden Occurrences - $1 million/$2 million Non-sudden occurrences - $3 million/$6 million
CAT 080010283 Chevron U.S.A. Inc. Westside Disposal Facility (aka EPC Westside) 26244 Highway 33 Fellows, CA 93324	Sudden Occurrences - $1 million/$2 million Non-sudden Occurrences - $3 million/$6 million

This corporate guarantee satisfies California Code of Regulations, title 22, division 4.5, chapter 14 and 15, article 8, third-party liability requirements for sudden accidental occurrences in the above-named owner or operator facility(ies)/TTU(s) for coverage in the amount of $4 million for each occurrence and $8 million for annual aggregate.

3. For value received from Chevron U.S.A. Inc., guarantor guarantees to any and all third parties who have sustained or may sustain bodily injury or property damage caused by sudden and/or nonsudden accidental occurrences arising from operations of the facility(ies)/TTU(s) covered by this guarantee that in the event that Chevron U.S.A. Inc. fails to satisfy a judgment or award based on a determination of liability for bodily injury or property damage to third parties caused by sudden and/or nonsudden accidental occurrences, arising from the operation of the above-named facility(ies)/TTU(s), or fails to pay an amount agreed to in settlement of a claim arising from or alleged to arise from such injury or damage, the guarantor will satisfy such judgment(s), award(s), or settlement agreement(s) up to the limits of coverage identified above.

4. Such obligation does not apply to the following:

(a) Bodily injury or property damage for which Chevron U.S.A. Inc. is obligated to pay damages by reason of the assumption of liability in a contract or agreement. This exclusion does not apply to liability for damages that Chevron U.S.A. Inc. would be obligated to pay in the absence of the contract or agreement.

(b) Any obligation of Chevron U.S.A. Inc. under a workers' compensation, disability benefits, or unemployment compensation law or any similar laws.

(c) Bodily injury to:

(1) An employee of Chevron U.S.A. Inc. arising from, and in the course of, employment by Chevron U.S.A. Inc.; or

(2) The spouse, child, parent, brother, or sister of that employee as a consequence of, or arising from, and in the course of employment by Chevron U.S.A. Inc. This exclusion applies:

(A) Whether Chevron U.S.A. Inc. may be liable as an employer or in any other capacity; and

(B) To any obligation to share damages with or repay another person who shall pay damages because of the injury to persons identified in paragraphs (A) and (B).

(d) Bodily injury or property, damages arising out of the ownership, maintenance, use, or entrustment to others of any aircraft, motor vehicle, or watercraft.

(e) Property damage to:

(1) Any property owned, rented, or occupied by Chevron U.S.A. Inc.;

(2) Premises that are sold, given away, or abandoned by Chevron U.S.A. Inc. if the property damage arises out of any part of those premises;

(3) Property loaned to Chevron U.S.A. Inc.;

(4) Personal property in the care, custody, or control of Chevron U.S.A. Inc.;

(5) That particular part of real property on which Chevron U.S.A. Inc. or any contractor or subcontractors working directly or indirectly on behalf of the Chevron U.S.A. Inc. are performing operations, if the property damage arises out of these operations.

5. Guarantor agrees that if, at any time during or at the end of any fiscal year before termination of this guarantee, the guarantor fails to meet the financial test criteria, guarantor shall send within ninety (90) days, by certified mail, notice to the Department of Toxic Substances Control (DTSC) and to Chevron U.S.A. Inc. that he or she intends to provide alternate liability coverage as specified in California Code of Regulations, title 22, division 4.5, chapter 14 and 15, article 8, sections 66264.147 and 66265.147, as applicable, in the name of Chevron U.S.A. Inc. Within 90 days after the end of such fiscal year, the guarantor shall establish such liability coverage unless Chevron U.S.A. Inc. has done so.

6. The guarantor agrees to notify the DTSC by certified mail of a voluntary or involuntary proceeding under Title 11 (Bankruptcy), United States Code, naming guarantor as debtor, within ten (10) days after commencement of the proceedings.

7. Guarantor agrees that within thirty (30) days after being notified by the DTSC of a determination that the guarantor no longer meets the financial test criteria or that he or she is disallowed from continuing as a guarantor, he or she shall establish alternate liability coverage as specified in California Code of Regulations, title 22, division 4.5, chapter 14 and 15, article 8, sections 66264.147 and 66265.147 in the name of Chevron U.S.A. Inc., unless the Chevron U.S.A. Inc. has done so.

8. Guarantor reserves the right to modify this agreement to take into account amendment or modification of the liability requirements set by California Code of Regulations, title 22, division 4.5, chapter 14 and 15, article 8, sections 66264.147 and 66265.147, provided that such modification shall become effective only if DTSC does not disapprove the modification within thirty (30) days of receipt of notification of the modification.

9. Guarantor agrees to remain bound under this guarantee for so long as Chevron U.S.A. Inc. shall comply with the applicable requirements of California Code of Regulations, title 22, division 4.5, chapter 14 and 15, article 8, sections 66264.147 and 66265.147 for the above-listed facility(ies)/TTU(s), except as provided in paragraph 10 of this agreement.

10. Guarantor may terminate this guarantee by sending notice by certified mail to DTSC, and to Chevron U.S.A. Inc., provided that this guarantee may not be terminated unless and until Chevron U.S.A. Inc. obtains, and DTSC approves alternate liability coverage complying with California Code of Regulations, title 22, division 4.5, chapter 14 and 15, article 8, sections 66264.147 and 66265.147.

11. Guarantor hereby expressly waives notice of acceptance of this guarantee by any party.

12. Guarantor agrees that this guarantee is in addition to and does not affect any other responsibility or liability of the guarantor with respect to the covered facility(ies)/TTU(s).

13. The guarantor shall satisfy a third-party liability claim only on receipt of one of the following documents:

(a) Certification from the Principal and the third-party liability claimant(s) that the liability claim should be paid. The certification shall be worded as follows, except that instructions in brackets are to be replaced with the relevant information and the brackets deleted:

CERTIFICATION OF VALID CLAIM

The undersigned, as parties [insert principal name] and [insert name and address of third-party claimant(s)], hereby certify that the claim of bodily injury and/or property damage caused by a [insert "sudden" and/or "nonsudden"] accidental occurrence arising from operating [insert Principal's name and facility type(s) hazardous waste "treatment", "storage" or disposal" facility/transportable treatment unit (TTU)] should be paid in the amount of $ [insert dollars].

[Signatures]

Principal

(Notary) Date

[Signatures]

Claimant(s)

(Notary) Date

(b) A valid final court order establishing a judgment against the Principal for bodily injury or property damage caused by sudden or nonsudden accidental occurrences arising from the operation of the Principal's facility/TTU or group of facility(ies)/TTU(s).

14. In the event of combination of this guarantee with another mechanism to meet liability requirements, this guarantee will be considered primary coverage.

I hereby certify that the wording of this guarantee is identical to the wording as specified in California Code of Regulations, title 22, section 66264.151, subsection(h)(2) and is being executed in accordance with the requirements of California Code of Regulations, title 22, division 4.5, chapter 14 and 15, article 8.

Effective Date: March 26, 2015

CHEVRON CORPORATION

Patricia E. Yarrington

Patricia E. Yarrington
Vice President and Chief Financial Officer

Assistant Secretary

CHEVRON CORPORATION
ENVIRONMENTAL FINANCIAL RESPONSIBILITY

ATTACHMENT "A"

SORTED BY STATE
FYE2014 ENDING 12/31/2014

CALIFORNIA

RCRA FACILITIES

Chevron U.S.A. Inc.

CAD008336901 Chevron U.S.A. Inc. El Segundo Refinery P.O. Box 97 El Segundo, CA 90245	Closure Post-Closure	$ $	3,058,206 11,367,549
CAT080010283 Chevron U.S.A. Inc. Westside Disposal Facility (aka EPC Westside) 26244 Highway 33 Fellows, CA 93324	Post-Closure	$	1,259,688
CAD009114919 Chevron U.S.A. Inc. Richmond Refinery P.O. Box 1272 Richmond, CA 94802	Closure Post-Closure	$ $	1,476,201 19,122,004
CAD043237486 Chevron U.S.A. Inc. 940 Hensley Street Richmond, CA 94804	Closure Post-Closure	$ $	87,086,313 19,340,509

CERCLA FACILITIES ADMINISTERED BY U.S. EPA

Chevron U.S.A. Inc.

California Dept. of Toxic Substances Control v. Chevron U.S.A Inc. et al Civil Docket No. 98-CV-05412-REC-DLB Purity Oil Sales, Inc. Superfund Site Malaga, CA 93725	Work	$	10,000,000

CHEVRON CORPORATION
ENVIRONMENTAL FINANCIAL RESPONSIBILITY

ATTACHMENT "A"

SORTED BY STATE
FYE2014 ENDING 12/31/2014

Waste Disposal, Inc. Superfund Site (CERCLIS ID #CAD980884357 Los Nietos Road at Greenleaf Avenue Santa Fe Springs, CA 90670	Work	$	7,900,000

Texaco Inc.

CAD980636781 Texaco Inc. Pacific Coast Pipeline Site 67 East Telegraph Road Fillmore, CA 93016	Work	$	10,000,000

Union Oil Company of California

Thomas Ranch 2798 Palisades Drive Corona, CA 92880	Work	$	654,436

Texaco Inc.

Thomas Ranch 2798 Palisades Drive Corona, CA 92880	Work	$	654,436

STATE ADMINISTERED FINANCIAL ASSURANCE

Chevron Chemical Company (a division of Chevron USA Inc.)

Docket #HSA97/98—005 Calspray Site 135 Walker Street Watsonville, CA 95076	Work	$	656,214

Union Oil Company of California

CA920426434 Guadalupe Oil Field Guadalupe, CA	Work	$	50,000,000

Chevron Land and Development Company

RWQCB Order No. R2-2003-0032 Hilltop West Richmond Former Chevron San Pablo Tank Farm Richmond, CA 94806	Post Closure	$	1,967,500

Chevron U.S.A. Inc.

RWQCB Order No. R2-2001-0036 Chevron U.S.A. Inc. Richmond Refinery P.O. Box 1272 Richmond, CA 94802	Corrective Action	$	45,000,000

GEORGIA

STATE ADMINISTERED FINANCIAL ASSURANCE

Union Oil Company of California

HSI# 10830 Chemical Specialists and Development, Inc. 2275 Tucker Industrial Rd. Tucker, GA 30084	Corrective Action	$	7,801,440

HAWAII

RCRA FACILITIES

Chevron U.S.A. Inc.

HIT160010005 Chevron U.S.A. Inc. Hawaii Refinery P.O. Box 29789 Honolulu, HI 96820	Post-Closure	$	161,561
	Corrective Action	$	1,975,231

CHEVRON CORPORATION
ENVIRONMENTAL FINANCIAL RESPONSIBILITY

ATTACHMENT "A"

SORTED BY STATE
FYE2014 ENDING 12/31/2014

ILLINOIS

RCRA FACILITIES

Chevron Environmental Management Company

ILD041518861			
Chevron Environmental Management Co.	Post-Closure	$	397,795
Lockport Plant	Corrective Action	$	5,560,038
301 W. 2nd Street			
Lockport, IL 60441			

IOWA

CERCLA FACILITIES ADMINISTERED BY U.S. EPA

ACC Chemical Company

VII-JK (CERCLA Remediation Action)			
Chemplex Site	Work	$	1,200,000
4010 21st Street	(Unit 1 & Unit 2)		
Camanche, IA 52730			

Getty Chemical Company

VII-JK (CERCLA Remediation Action)			
Chemplex Site	Work	$	1,200,000
4010 21st Street	(Unit 1 & Unit 2)		
Camanche, IA 52730			

CHEVRON CORPORATION
ENVIRONMENTAL FINANCIAL RESPONSIBILITY

ATTACHMENT "A"

SORTED BY STATE
FYE2014 ENDING 12/31/2014

LOUISIANA

RCRA FACILITIES

Chevron Oronite Company, LLC

LAD034199802 Chevron Oronite Company, LLC P.O. Box 70 Belle Chasse, LA 70037	Post-Closure	$	2,426,804

STATE ADMINISTERED FINANCIAL ASSURANCE

Chevron Oronite Company, LLC

Site ID No. GD-075-1511/ Permit # P-0112 Chevron Oronite Company, LLC Oak Point Plant Highway 23 – P.O. Box 70 Belle Chasse, LA 70037	Closure	$	3,480,336

MISSISSIPPI

RCRA FACILITIES

Chevron U.S.A. Inc.

MSD054179403 Chevron U.S.A. Inc. Pascagoula Refinery P.O. Box 1300 Pascagoula, MS 39567	Closure	$	2,759,312
	Post-Closure	$	9,247,680
	Corrective Action (USEPA R4)	$	13,944,313

ATTACHMENT "A"

SORTED BY STATE
FYE2014 ENDING 12/31/2014

NEW JERSEY

RCRA FACILITIES

Chevron U.S.A. Inc.

NJD081982902 Chevron U.S.A. Inc. Perth Amboy Refinery 1200 State Street Perth Amboy, NJ 08861	Corrective Action	$	35,800,000

NEW MEXICO

CERCLA FACILITIES ADMINISTERED BY U.S. EPA

Chevron U.S.A. Inc.

Docket No. 2011-12 Mariano Lake Mine Site 15N, 14W/Sections 11 and 12 McKinley County, NM 87313	Work	$	1,000,000

Chevron Mining Inc.

NMD002899094 Questa Mine - Removal Action AOC (Docket06-09-12) Chevron Mining Inc. Chevron Questa Mine NM Highway 38 Red River Canyon Questa, NM 87556	Work	$	5,000,000
NMD002899094 Questa Mine - Early Design AOC (Docket 06-13-12) Chevron Mining Inc. Chevron Questa Mine NM Highway 38 Red River Canyon Questa, NM 87556	Work	$	6,300,000

CHEVRON CORPORATION
ENVIRONMENTAL FINANCIAL RESPONSIBILITY

ATTACHMENT "A"

SORTED BY STATE
FYE2014 ENDING 12/31/2014

OHIO

RCRA FACILITIES

Chevron U.S.A. Inc.

OHD004254132 Chevron U.S.A. Inc. Cincinnati Refinery P.O. Box 96 North Bend, OH 45052	Corrective Action (Administrative Order on Consent with U.S. EPA region 5)	$	10,623,000

STATE ADMINISTERED FINANCIAL ASSURANCE

Union Oil Company of California

CERCLA Docket No. 91-F-90011 Union Oil Company of California Heath Facility (Consent Order) 840 Heath Road Heath, OH 43056	Work	$	4,654,114

Chevron U.S.A. Inc.

OHD004254132 Chevron U.S.A. Inc. Cincinnati Refinery P.O. Box 96 North Bend, OH 45052	Post-Closure (Ohio EPA)	$	215,000

CHEVRON CORPORATION
ENVIRONMENTAL FINANCIAL RESPONSIBILITY

ATTACHMENT "A"

SORTED BY STATE
FYE2014 ENDING 12/31/2014

TEXAS

RCRA FACILITIES

Chevron Environmental Management Company

TXD007378995			
Chevron Environmental Management Co.	Post-Closure	$	405,894
Amarillo Plant	Corrective Action	$	4,472,117
315 South Grand			
Amarillo, TX 79104			

STATE ADMINISTERED FINANCIAL ASSURANCE

Chevron Environmental Management Company

SWR No. 30004, Docket No. 97-0404-IHW-E	Post-Response	$	1,087,382
Chevron Environmental Management Company	Action Care		
Port Arthur Facility			
2001 B Gulfway Drive			
Port Arthur, TX 77670			

UTAH

RCRA FACILITIES

Chevron U.S.A. Inc.

UTD092029768			
Chevron U.S.A. Inc	Post-Closure	$	902,100
Salt Lake Refinery	Corrective Action	$	933,800
2351 North 1100 West			
Salt Lake City, UT 84116			

CHEVRON CORPORATION
ENVIRONMENTAL FINANCIAL RESPONSIBILITY

ATTACHMENT "A"

SORTED BY STATE
FYE2014 ENDING 12/31/2014

CERCLA FACILITIES ADMINISTERED BY U.S. EPA

Chevron U.S.A. Inc.

Docket# CERCLA-08-2003-0014 Chevron U.S.A. Inc. Northwest Oil Drain Salt Lake County, UT 84116	Work	$	705,000

WYOMING

RCRA FACILITIES

Chevron Environmental Management Company

WYD088677943 Chevron Environmental Management Co. Casper Plant P.O. Box 307 Evansville, WY 82636	Post-Closure Corrective Action	$ $	5,969,418 11,345,000

PUERTO RICO

CERCLA FACILITIES ADMINISTERED BY U.S. EPA

Chevron Chemical Company (a division of Chevron U.S.A. Inc.)

PRD980763783 Fibers Public Supply Wells Superfund Site Civil Action Number 92-2486 RTE 3 Jobos, Guayama, Puerto Rico 00654	Work	$	2,800,000

CHEVRON CORPORATION
LIABILITY COVERAGE FOR BOTH SUDDEN AND NON-SUDDEN ACCIDENTIAL OCCURANCES FOR PROJECT SITES

ATTACHMENT "B"

FYE 2014 ENDING 12/31/2014

Facility	Liability Coverage (Per Occur./Annual Aggregate)
CALIFORNIA	
CAD 008336901 Chevron U.S.A. Inc. El Segundo Refinery P.O. Box 97 El Segundo, CA 90245	Sudden Occurrences - $1 million/$2 million Non-sudden Occurrences - $3 million/$6 million
CAD 009114919 Chevron U.S.A. Inc. Richmond Refinery P.O. Box 1272 Richmond, CA 94802	Sudden Occurrences - $1 million/$2 million Non-sudden Occurrences - $3 million/$6 million
CAD 043237486 Chevron U.S.A. Inc. 940 Hensley Street Richmond, CA 94804	Sudden Occurrences - $1 million/$2 million Non-sudden occurrences - $3 million/$6 million
CAT 080010283 Chevron U.S.A. Inc. Westside Disposal Facility (aka EPC Westside) 26244 Highway 33 Fellows, CA 93324	Sudden Occurrences - $1 million/$2 million Non-sudden Occurrences - $3 million/$6 million
HAWAII	
HIT160010005 Chevron U.S.A. Inc. Hawaii Refinery P.O. Box 29789 Honolulu, HI 96820	Sudden Occurrences – $1 million/$2 million Non-sudden Occurrences – $3 million/$6 million

CHEVRON CORPORATION
LIABILITY COVERAGE FOR BOTH SUDDEN AND NON-SUDDEN ACCIDENTIAL OCCURANCES FOR PROJECT SITES
ATTACHMENT "B"
FYE2014 ENDING 12/31/2014

IOWA

VII-JK (CERCLA Remediation Action) Chemplex Site ACC Chemical Company 4010 21st Street Camanche, IA 52730	Annual Aggregate per site $10 million OU-1 $ 2 million OU-2
VII-JK (CERCLA Remediation Action) Chemplex Site Getty Chemical Company 4010 21st Street Camanche, IA 52730	Annual Aggregate per site $10 millon OU-1 $ 2 million OU-2

ILLINOIS

ILD041518861 Chevron Environmental Management Company Lockport Plant 301 W. 2nd Street Lockport, IL 60441	Annual Aggregate per site $8 million

MISSISSIPPI

Chevron U.S.A. Inc. Pascagoula Refinery P.O. Box 1300 Pascagoula, MS 39567	USEPA - Sudden Occurrences – $1 million/$2 million Non-sudden Occurrences – $3 million/$6 million MSDEQ – Annual Aggregate Per site $10 million

CHEVRON CORPORATION
LIABILITY COVERAGE FOR BOTH SUDDEN AND NON-SUDDEN ACCIDENTIAL OCCURANCES FOR PROJECT SITES
ATTACHMENT "B"
FYE2014 ENDING 12/31/2014

NEW JERSEY

NJD081982902 Chevron U.S.A. Inc. Perth Amboy Refinery 1200 State Street Perth Amboy, NJ 08861	USEPA - Sudden Occurrences – $1 million/$2 million

OHIO

OHD004254132 Chevron U.S.A. Inc. Cincinnati Refinery P.O. Box 96 North Bend, OH 45052	Sudden Occurrences – $1 million/$2 million Non-sudden Occurrences – $4 million/$8 million

UTAH

UTD092029768 Chevron U.S.A. Inc. Salt Lake Refinery 2351 North 1100 West Salt Lake City, UT 84116	Sudden Occurrences – $1 million/$2 million Non-sudden Occurrences – $3 million/$6 million

WYOMING

WYD088677943 Chevron Environmental Management Company Casper Plant P.O. Box 307 Evansville, WY 82636	Annual Aggregate – $10 million for State

CHEVRON CORPORATION
ENVIRONMENTAL FINANCIAL RESPONSIBILITY
ATTACHMENT C

(FYE2014 Ending 12/31/2014)

FYE 2014 UIC WELLS
US EPA Region VIII

Injection Well/Address	Plugging and Abandonment Cost Estimate
Texaco Inc. Southern Ute Well #17 US EPA UIC Permit # CO2530-2693 Location: NWNW Sec. 34 T33N, R9W, SUL La Plata County, Colorado	$244,628
Texaco Exploration and Production Inc. Valencia Canyon #17-2 US EPA UIC Permit #CO2690-03757 Location: NWNW Sec. 17 T33N, R11W, SUL La Plata County, Colorado	$244,628
Texaco Exploration and Production Inc. Valencia Canyon #1-2 US EPA UIC Permit #CO2581-03532 Location: NESE Sec. 2 T32N, R12W, SUL La Plata County, Colorado	$244,628
Chevron Midcontinent, L.P. Well Name: Clark 4-1 WDW US EPA UIC Permit No.: CO2588-03541 Location: NESE Sec. 4 T33N, R11W, SUL La Plata County, Colorado	$244,628
Total current plugging and abandonment	$978,512

pwc

Report of Independent Accountants

To the Board of Directors of Chevron Corporation:

We have performed the procedures enumerated below, which were agreed to by the management of Chevron Corporation (the "Company"), solely to assist you in respect to certain financial information included in the letter dated March 26, 2015 from the Vice President and Chief Financial Officer of the Company to the Department of Toxic Substances Control - California (the "Letter"). The management of the Company is responsible for the financial information included in the Letter. This agreed-upon procedures engagement was conducted in accordance with attestation standards established by the American Institute of Certified Public Accountants. The sufficiency of these procedures is solely the responsibility of those parties specified in this report. Consequently, we make no representation regarding the sufficiency of the procedures described below either for the purpose for which this report has been requested or for any other purpose.

The procedures and the associated findings are as follows:

1. We recalculated the formulas included in the Letter, Alternative II, at items 1, 3, 9, 10 and 12 to determine mathematical accuracy and found no differences.

2. We compared the Net Worth of the Company at December 31, 2014, as stated in the enclosed Schedule A, to the amount set forth as *Total Equity* in the consolidated financial statements included in the Company's 2014 Annual Report on Form 10-K. We found no difference.

3. We compared the Intangible Assets of the Company at December 31, 2014, as stated in the enclosed Schedule A, to a supporting schedule prepared by the Company from its accounting records. We also recalculated the mathematical accuracy of the supporting schedule. We found no exceptions as a result of the procedures.

4. We compared the Tangible Net Worth of the Company, as stated in Schedule A, to the corresponding amount as stated in the Letter, Alternative II at item 7. We found no difference.

5. We compared the Total Assets in the U.S. of the Company at December 31, 2014, which amounted to $79,014,000,000, as stated in the Letter, Alternative II at item 8 to the amount set forth as Total Assets - United States in Note 12 to the consolidated financial statements included in the Company's 2014 Annual Report on Form 10-K. We found no difference.

6. We recalculated the percentage of the Total Assets in the U.S., as stated in 5 above, of the amount set forth as Total Assets in the consolidated balance sheet included in the Company's 2014 Annual Report on Form 10-K and agreed that this percentage is less than 90% as stated in the Letter, Alternative II at item 11.

PricewaterhouseCoopers LLP, Three Embarcadero Center, San Francisco, CA 94111-4004
T: (415) 498 5000, F: (415) 498 7100, www.pwc.com/us

We were not engaged to and did not conduct an examination, the objective of which would be the expression of an opinion on the specified elements, accounts or items referred to in 1 to 6 above. Accordingly, we do not express such an opinion. Had we performed additional procedures, other matters might have come to our attention that would have been reported to you.

This report is intended solely for the information and use of the Company and the Department of Toxic Substances Control – California, and is not intended to be and should not be used by anyone other than these specified parties.

PricewaterhouseCoopers LLP

March 26, 2015

Schedule A

Tangible Net Worth of Chevron Corporation at December 31, 2014

Net Worth	$156,191,000,000
Intangible Assets	(4,693,000,000)
Tangible Net Worth of Chevron Corporation	$151,498,000,000

EK770920 Corp DES
CHEVRON CORP CVX Float 02/17 100.026/100.026 TRAC

CVX Float 02/22/17 Corp — Page 1/11 — Description: Bond

94) Notes | 95) Buy | 96) Sell | 97) Settings

20) Bond Description | 22) Issuer Description

Pages
1) Bond Info
2) Addtl Info
3) Covenants
4) Guarantors
5) Bond Ratings
6) Identifiers
7) Exchanges
8) Inv Parties
9) Fees, Restrict
10) Schedules
11) Coupons

Quick Links
32) ALLQ Pricing
33) QRD Quote Reca
34) TDH Trade Hist
35) CAC Corp Action
36) CF Prospectus
37) CN Sec News
38) HDS Holders
39) VPR Underly Info

Send Bond

Issuer Information

Name	CHEVRON CORP
Industry	Integrated Oils

Security Information

Mkt Iss	Global		
Country	US	Currency	USD
Rank	Sr Unsecured	Series	
Coupon	0.36185	Type	Floating
Formula	QUARTLY US LIBOR +10.0000		
Day Cnt	ACT/360	Iss Price	100.00000
Maturity	02/22/2017		
BULLET			
Iss Sprd			
Calc Type	(21)FLOAT RATE NOTE		
Announcement Date		02/24/2015	
Interest Accrual Date		03/03/2015	
1st Settle Date		03/03/2015	
1st Coupon Date		05/22/2015	

Identifiers

CUSIP	166764AS9
ID Number	EK7709208
ISIN	US166764AS94

Bond Ratings

Moody's	Aa1
S&P	AA
Composite	AA

Issuance & Trading

Amt Issued/Outstanding
USD 900,000.00 (M) /
USD 900,000.00 (M)

Min Piece/Increment
2,000.00 / 1,000.00

Par Amount	1,000.00
Book Runner	JOINT LEADS
Reporting	TRACE

Australia 61 2 9777 8600 Brazil 5511 3048 4500 Europe 44 20 7330 7500 Germany 49 69 9204 1210 Hong Kong 852 2977 6000
Japan 81 3 3201 8900 Singapore 65 6212 1000 U.S. 1 212 318 2000 Copyright 2015 Bloomberg Finance L.P.
SN 864891 G733-2643-0 24-Mar-15 11:03:47 PDT GMT-7:00

EK770938 Corp DES

CHEVRON CORP CVX 1.365 03/18 100.410/100.410 (1.222/1.222) TRAC

CVX 1.365 03/02/18 Corp Page 1/11 Description: Bond

94) Notes 95) Buy 96) Sell 97) Settings

20) Bond Description 21) Issuer Description

Pages
1) Bond Info
2) Addtl Info
3) Covenants
4) Guarantors
5) Bond Ratings
6) Identifiers
7) Exchanges
8) Inv Parties
9) Fees, Restrict
10) Schedules
11) Coupons

Quick Links
32) ALLQ Pricing
33) QRD Quote Reca
34) TDH Trade Hist
35) CAC Corp Action
36) CF Prospectus
37) CN Sec News
38) HDS Holders
39) VPR Underly Info

Send Bond

Issuer Information

Name	CHEVRON CORP
Industry	Integrated Oils

Security Information

Mkt Iss	Global		
Country	US	Currency	USD
Rank	Sr Unsecured	Series	
Coupon	1.365	Type	Fixed
Cpn Freq	S/A		
Day Cnt	30/360	Iss Price	100.00000
Maturity	03/02/2018		

MAKE WHOLE @7.5 until 03/02/18/BULLET

Iss Sprd 40.00bp vs T 1 02/15/18

Calc Type (13)ODD CPN METHOD

Announcement Date	02/24/2015
Interest Accrual Date	03/03/2015
1st Settle Date	03/03/2015
1st Coupon Date	09/02/2015

Identifiers

CUSIP	166764AV2
ID Number	EK7709380
ISIN	US166764AV24

Bond Ratings

Moody's	Aa1
S&P	AA
Composite	AA

Issuance & Trading

Amt Issued/Outstanding

USD	1,750,000.00 (M) /
USD	1,750,000.00 (M)

Min Piece/Increment

2,000.00 / 1,000.00

Par Amount	1,000.00
Book Runner	JOINT LEADS
Reporting	TRACE

Australia 61 2 9777 8600 Brazil 5511 2395 9000 Europe 44 20 7330 7500 Germany 49 69 9204 1210 Hong Kong 852 2977 6000
Japan 81 3 3201 8900 Singapore 65 6212 1000 U.S. 1 212 318 2000 Copyright 2015 Bloomberg Finance L.P.
SN 864891 G732-2643-0 24-Mar-15 11:01:00 PDT GMT-7:00

EK770962 Corp DES
CHEVRON CORP CVX Float 03/18 100.006/100.006 TRAC

CVX Float 03/02/18 Corp Page 1/11 Description: Bond

94 Notes | 95 Buy | 96 Sell | 97 Settings

20 Bond Description | 22 Issuer Description

Pages
1) Bond Info
2) Addtl Info
3) Covenants
4) Guarantors
5) Bond Ratings
6) Identifiers
7) Exchanges
8) Inv Parties
9) Fees, Restrict
10) Schedules
11) Coupons

Quick Links
32) ALLQ Pricing
33) QRD Quote Reca
34) TDH Trade Hist
35) CAC Corp Action
36) CF Prospectus
37) CN Sec News
38) HDS Holders
39) VPR Underly Info

m) Send Bond

Issuer Information

Name	CHEVRON CORP
Industry	Integrated Oils

Security Information

Mkt Iss	Global		
Country	US	Currency	USD
Rank	Sr Unsecured	Series	
Coupon	0.43185	Type	Floating
Formula	QUARTLY US LIBOR +17.0000		
Day Cnt	ACT/360	Iss Price	100.00000
Maturity	03/02/2018		
BULLET			
Iss Sprd			
Calc Type	(21)FLOAT RATE NOTE		
Announcement Date		02/24/2015	
Interest Accrual Date		03/03/2015	
1st Settle Date		03/03/2015	
1st Coupon Date		06/02/2015	

Identifiers

CUSIP	166764AW0
ID Number	EK7709620
ISIN	US166764AW07

Bond Ratings

Moody's	Aa1
S&P	AA
Composite	AA

Issuance & Trading

Amt Issued/Outstanding	
USD	550,000.00 (M) /
USD	550,000.00 (M)
Min Piece/Increment	
	2,000.00 / 1,000.00
Par Amount	1,000.00
Book Runner	JOINT LEADS
Reporting	TRACE

Australia 61 2 9777 8600 Brazil 5511 2395 9000 Europe 44 20 7330 7500 Germany 49 69 9204 1210 Hong Kong 852 2977 6000
Japan 81 3 3201 8900 Singapore 65 6212 1000 U.S. 1 212 318 2000 Copyright 2015 Bloomberg Finance L.P.
SN 864891 G722-2643-0 24-Mar-15 11 02:19 PDT GMT-7:00

EK770986 Corp DES

CHEVRON CORP CVX 1.961 03/20 100.361/100.361 (1.883/1.883) TRAC

CVX 1.961 03/03/20 Corp — Page 1/11 — Description: Bond

94 Notes | 95 Buy | 96 Sell | 97 Settings

21 Bond Description | 22 Issuer Description

Pages
- 1) Bond Info
- 2) Addtl Info
- 3) Covenants
- 4) Guarantors
- 5) Bond Ratings
- 6) Identifiers
- 7) Exchanges
- 8) Inv Parties
- 9) Fees, Restrict
- 10) Schedules
- 11) Coupons

Quick Links
- 32) ALLQ Pricing
- 33) QRD Quote Reca
- 34) TDH Trade Hist
- 35) CAC Corp Action
- 36) CF Prospectus
- 37) CN Sec News
- 38) HDS Holders
- 39) VPR Underly Info

mSend Bond

Issuer Information

Name	CHEVRON CORP
Industry	Integrated Oils

Security Information

Mkt Iss	Global		
Country	US	Currency	USD
Rank	Sr Unsecured	Series	
Coupon	1.961	Type	Fixed
Cpn Freq	S/A		
Day Cnt	30/360	Iss Price	100.00000
Maturity	03/03/2020		

MAKE WHOLE @7.5 until 02/03/20/ CALL 02/03/2...

Iss Sprd	50.00bp vs T 1 ¼ 01/31/20
Calc Type	(1)STREET CONVENTION
Announcement Date	02/24/2015
Interest Accrual Date	03/03/2015
1st Settle Date	03/03/2015
1st Coupon Date	09/03/2015

Identifiers

CUSIP	166764AR1
ID Number	EK7709869
ISIN	US166764AR12

Bond Ratings

Moody's	Aa1
S&P	AA
Composite	AA

Issuance & Trading

Amt Issued/Outstanding

USD	1,750,000.00 (M) /
USD	1,750,000.00 (M)

Min Piece/Increment

2,000.00 / 1,000.00

Par Amount	1,000.00
Book Runner	JOINT LEADS
Reporting	TRACE

Australia 61 2 9777 8600 Brazil 5511 2395 9000 Europe 44 20 7330 7500 Germany 49 69 9204 1210 Hong Kong 852 2977 6000
Japan 81 3 3201 8900 Singapore 65 6212 1000 U.S. 1 212 318 2000 Copyright 2015 Bloomberg Finance L.P.
SN 864891 G782-2043-0 24-Mar-15 10:56:49 PDT GMT-7:00

EK770998 Corp DES
CHEVRON CORP CVX Float 03/22 100.208/100.208 TRAC

CVX Float 03/03/22 Corp — Page 1/11 — Description: Bond

94) Notes | 95) Buy | 96) Sell | 97) Settings

21) Bond Description | 22) Issuer Description

Pages
1) Bond Info
2) Addtl Info
3) Covenants
4) Guarantors
5) Bond Ratings
6) Identifiers
7) Exchanges
8) Inv Parties
9) Fees, Restrict
10) Schedules
11) Coupons

Quick Links
32) ALLQ Pricing
33) QRD Quote Reca
34) TDH Trade Hist
35) CAC Corp Action
36) CF Prospectus
37) CN Sec News
38) HDS Holders
39) VPR Underly Info

m) Send Bond

Issuer Information

Name	CHEVRON CORP
Industry	Integrated Oils

Security Information

Mkt Iss	Global		
Country	US	Currency	USD
Rank	Sr Unsecured	Series	
Coupon	0.79185	Type	Floating
Formula	QUARTLY US LIBOR +53.0000		
Day Cnt	ACT/360	Iss Price	100.00000
Maturity	03/03/2022		
BULLET			
Iss Sprd			
Calc Type	(21)FLOAT RATE NOTE		
Announcement Date			02/24/2015
Interest Accrual Date			03/03/2015
1st Settle Date			03/03/2015
1st Coupon Date			06/03/2015

Identifiers

CUSIP	166764AU4
ID Number	EK7709984
ISIN	US166764AU41

Bond Ratings

Moody's	Aa1
S&P	AA
Composite	AA

Issuance & Trading

Amt Issued/Outstanding
USD 350,000.00 (M) /
USD 350,000.00 (M)

Min Piece/Increment
2,000.00 / 1,000.00

Par Amount	1,000.00
Book Runner	JOINT LEADS
Reporting	TRACE

Australia 61 2 9777 8600 Brazil 5511 2395 9000 Europe 44 20 7330 7500 Germany 49 69 9204 1210 Hong Kong 852 2977 6000
Japan 81 3 3201 8900 Singapore 65 6212 1000 U.S. 1 212 318 2000 Copyright 2015 Bloomberg Finance L.P.
SN 864891 G722-2643-0 24-Mar-15 11:03:03 PDT GMT-7:00

EK771004 Corp DES
CHEVRON CORP CVX 2.411 03/22 100.932/100.932 (2.262/2.262) TRAC

CVX 2.411 03/03/22 Corp — Page 1/11 — Description: Bond

94) Notes | 95) Buy | 96) Sell | 97) Settings

20) Bond Description | 21) Issuer Description

Pages
1) Bond Info
2) Addtl Info
3) Covenants
4) Guarantors
5) Bond Ratings
6) Identifiers
7) Exchanges
8) Inv Parties
9) Fees, Restrict
10) Schedules
11) Coupons

Quick Links
32) ALLQ Pricing
33) QRD Quote Reca
34) TDH Trade Hist
35) CAC Corp Action
36) CF Prospectus
37) CN Sec News
38) HDS Holders
39) VPR Underly Info

mSend Bond

Issuer Information

Name	CHEVRON CORP
Industry	Integrated Oils

Security Information

Mkt Iss	Global		
Country	US	Currency	USD
Rank	Sr Unsecured	Series	
Coupon	2.411	Type	Fixed
Cpn Freq	S/A		
Day Cnt	30/360	Iss Price	100.00000
Maturity	03/03/2022		

MAKE WHOLE @10 until 01/03/22/ CALL 01/03/2...

Iss Sprd	62.50bp vs T 1 ½ 01/31/22
Calc Type	(1)STREET CONVENTION
Announcement Date	02/24/2015
Interest Accrual Date	03/03/2015
1st Settle Date	03/03/2015
1st Coupon Date	09/03/2015

Identifiers

CUSIP	166764AT7
ID Number	EK7710040
ISIN	US166764AT77

Bond Ratings

Moody's	Aa1
S&P	AA
Composite	AA

Issuance & Trading

Amt Issued/Outstanding

USD	700,000.00 (M) /
USD	700,000.00 (M)

Min Piece/Increment
2,000.00 / 1,000.00

Par Amount	1,000.00
Book Runner	JOINT LEADS
Reporting	TRACE

Australia 61 2 9777 8600 Brazil 5511 3395 9000 Europe 44 20 7330 7500 Germany 49 69 9204 1210 Hong Kong 852 2977 6000
Japan 81 3 3201 8900 Singapore 65 6212 1000 U.S. 1 212 318 2000 Copyright 2015 Bloomberg Finance L.P.
SN 304891 G782-2643-0 24-Mar-15 10:52:31 PDT GMT-7:00

UNITED STATES SECURITIES AND EXCHANGE COMMISSION
Washington, D.C. 20549

Form 10-K

☑ ANNUAL REPORT PURSUANT TO SECTION 13 OR 15(d) OF THE SECURITIES EXCHANGE ACT OF 1934
For the fiscal year ended December 31, 2014

OR

☐ TRANSITION REPORT PURSUANT TO SECTION 13 OR 15(d) OF THE SECURITIES EXCHANGE ACT OF 1934
For the transition period from _____ to _____
Commission File Number 001-00368

Chevron Corporation

(Exact name of registrant as specified in its charter)

Delaware	94-0890210	6001 Bollinger Canyon Road, San Ramon, California 94583-2324
(State or other jurisdiction of incorporation or organization)	(I.R.S. Employer Identification No.)	(Address of principal executive offices) (Zip Code)

Registrant's telephone number, including area code (925) 842-1000
Securities registered pursuant to Section 12 (b) of the Act:

Title of Each Class	Name of Each Exchange on Which Registered
Common stock, par value $.75 per share	New York Stock Exchange, Inc.

Indicate by check mark if the registrant is a well-known seasoned issuer, as defined in Rule 405 of the Securities Act.
Yes ☑ No ☐

Indicate by check mark if the registrant is not required to file reports pursuant to Section 13 or Section 15(d) of the Act.
Yes ☐ No ☑

Indicate by check mark whether the registrant (1) has filed all reports required to be filed by Section 13 or 15(d) of the Securities Exchange Act of 1934 during the preceding 12 months (or for such shorter period that the registrant was required to file such reports), and (2) has been subject to such filing requirements for the past 90 days.
Yes ☑ No ☐

Indicate by check mark whether the registrant has submitted electronically and posted on its corporate Web site, if any, every Interactive Data File required to be submitted and posted pursuant to Rule 405 of Regulation S-T (§ 232.405 of this chapter) during the preceding 12 months (or for such shorter period that the registrant was required to submit and post such files). Yes ☑ No ☐

Indicate by check mark if disclosure of delinquent filers pursuant to Item 405 of Regulation S-K (§ 229.405 of this chapter) is not contained herein, and will not be contained, to the best of registrant's knowledge, in definitive proxy or information statements incorporated by reference in Part III of this Form 10-K or any amendment to this Form 10-K. ☑

Indicate by check mark whether the registrant is a large accelerated filer, an accelerated filer, a non-accelerated filer, or a smaller reporting company. See the definitions of "large accelerated filer," "accelerated filer" and "smaller reporting company" in Rule 12b-2 of the Exchange Act.

Large accelerated filer ☑	Accelerated filer ☐	Non-accelerated filer ☐ (Do not check if a smaller reporting company)	Smaller reporting company ☐

Indicate by check mark whether the registrant is a shell company (as defined in Rule 12b-2 of the Act). Yes ☐ No ☑

Aggregate market value of the voting and non-voting common equity held by non-affiliates computed by reference to the price at which the common equity was last sold, or the average bid and asked price of such common equity, as of the last business day of the registrant's most recently completed second fiscal quarter — $247,905,549,754 (As of June 30, 2014)

Number of Shares of Common Stock outstanding as of February 9, 2015 — 1,880,180,422

DOCUMENTS INCORPORATED BY REFERENCE
(To The Extent Indicated Herein)

Notice of the 2015 Annual Meeting and 2015 Proxy Statement, to be filed pursuant to Rule 14a-6(b) under the Securities Exchange Act of 1934, in connection with the company's 2015 Annual Meeting of Stockholders (in Part III)